KAISAI

SUPER DC INVERTER SERIES

Service Manual 2019

Part 1 General Information 1

Part 2 Indoor Units 5

Part 3 Outdoor Units 83

Part 4 Installation..... 99

Part 5 Electrical Control System 129

※The specifications, designs, and information in this book are subject to change without notice for product improvement.

Part 1
General Information

1. Model List.....2

2. External Appearance.....3

2.1 Indoor Units..... 3

2.2 Outdoor Units..... 3

1. Model List

1.1 Indoor Units

R32 (capacity multiplied by 1000Btu/h)

Type	Function	12	18	24	36	48	55
Super Slim Four-way Cassette	Cooling and heating			●	●	●	●
A6 Duct	Cooling and heating		●	●	●	●	●
Ceiling-floor	Cooling and heating		●	●	●	●	●
Compact cassette	Cooling and heating	●					

1.2 Outdoor Units

Universal Outdoor unit Model	Compressor type	Compressor Brand	Matched indoor units
KOB30U-18HFN32	Rotary	GMCC	KTI-18HWF32 KUE-18HRF32
KOCA30U-24HFN32	Rotary	GMCC	KCD-24HRF32 KTI-24HWF32 KUE-24HRF32
KOD30U-36HFN32	Rotary	GMCC	KCD-36HRF32 KTI-36HWF32 KUE-36HRF32
KOE30U-48HFN32	Rotary	GMCC	KCD-48HRF32 MTI-48HWF32 KUE-48HRF32
KOE30U-55HFN32	Rotary	GMCC	KCD-55HRF32 KTI-55HWF32 MUE-55HRF32
KOB30-12HFN32X	Rotary	GMCC	KCA3U-12HRF32X

2. External Appearance

2.1 Indoor Units

Super slim cassette	Duct
Ceiling-Floor	Compact Four-way cassette

2.2 Outdoor Units

Single fan outdoor unit	Double fan outdoor unit

Part 2
Indoor Units

Super Slim Cassette Type.....6

A6 Duct Type.....27

Ceiling & Floor Type.....50

Compact Four-way Cassette Type 69

Super Slim Cassette Type

1. Features 7

2. Dimensions 10

3. Service Space 11

4. Wiring Diagrams 12

5. Air Velocity Distributions (Reference Data) 18

6. Electric Characteristics 21

7. Sound Levels 22

8. Accessories.....23

9. The Specification of Power 24

10. Field Wiring 25

1. Features

1.1 Overview

- Compact design, super slim body size, less space requiring in installation
- Each louver can be separately controlled, more comfort air blowing is possible.
- Auto-lifting panel design, more convenient to clean and maintain the filter. (optional)

1.2 Fresh air intake function

- Fresh air fulfills air quality more healthy and comfortable.
- Ventilation motor is optional to increase the effect of fresh air.

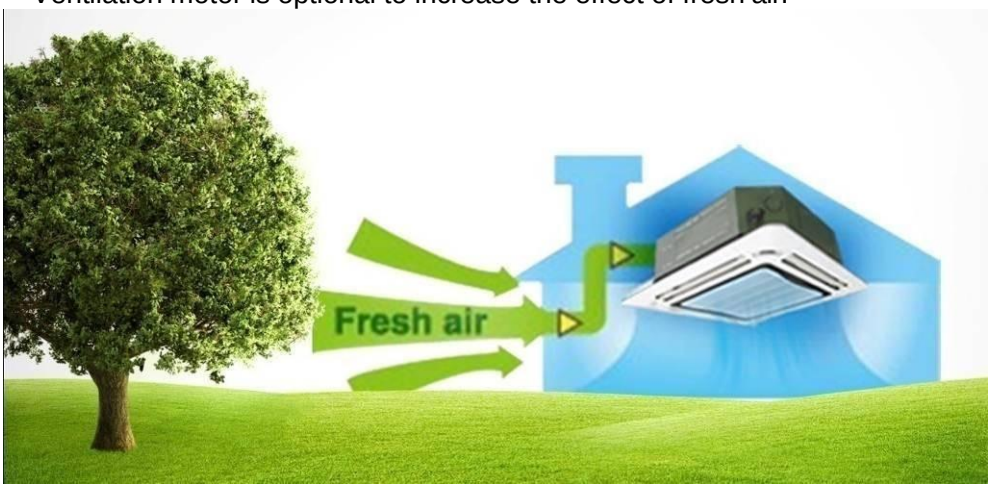

1.3 Optional ionizer generator

- Ionizer generator is optional to get refreshing air to your room.

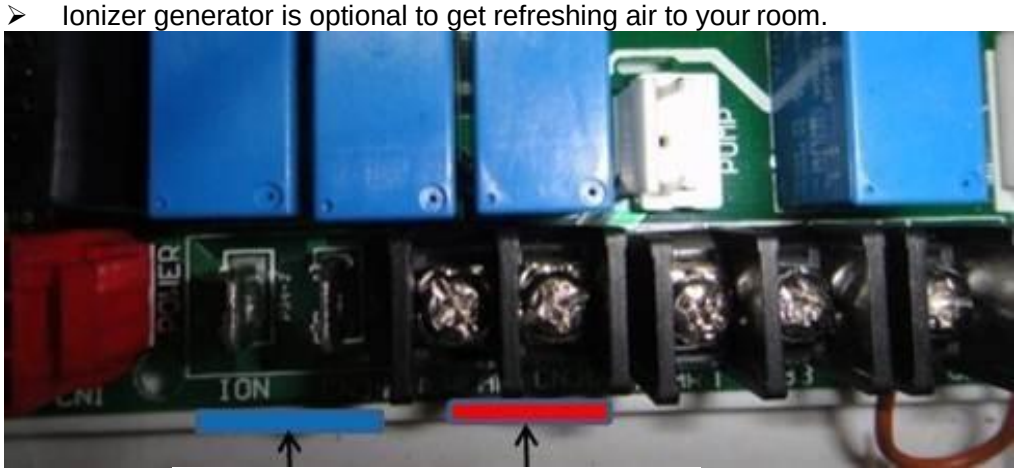

Ionizer generator connector Ventilation motor connector

- Ionizer can be switched on or off by remote controller.
  When pressing the Clean Air button on the remote controller, Ionizer will work and the indicator light on display board will shine.

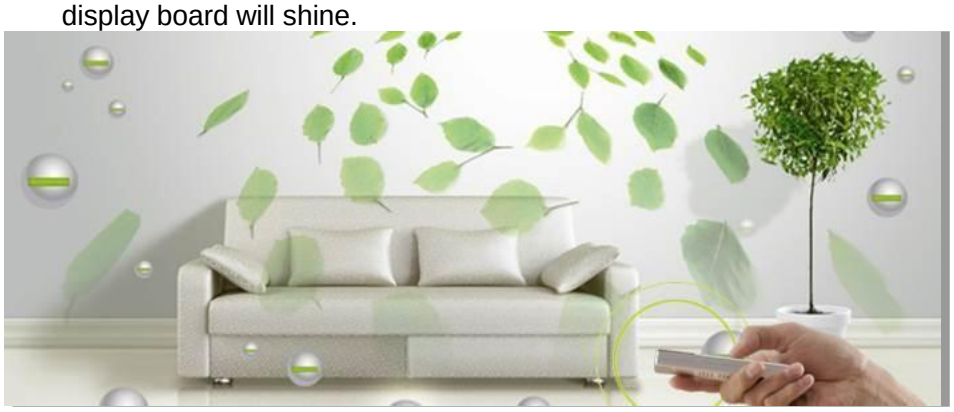

1.4 External air duct design

- Reserve external air duct, more flexible for the air supply.

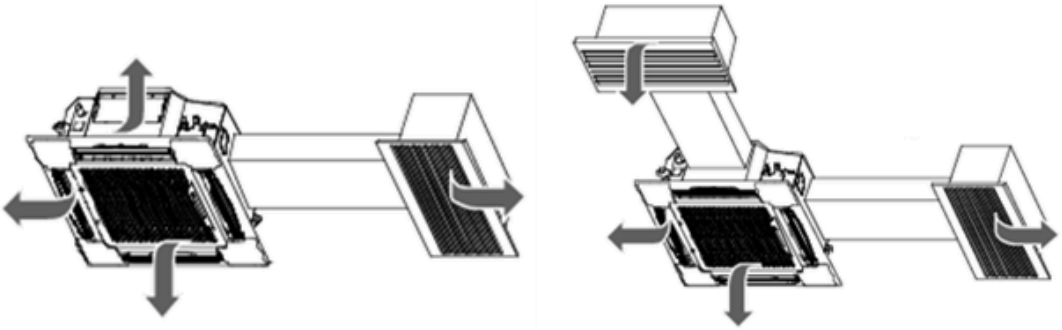

1.5 Built-in draining pump

- Due to the improvement of structure, more convenient to repair or replace the draining pump.

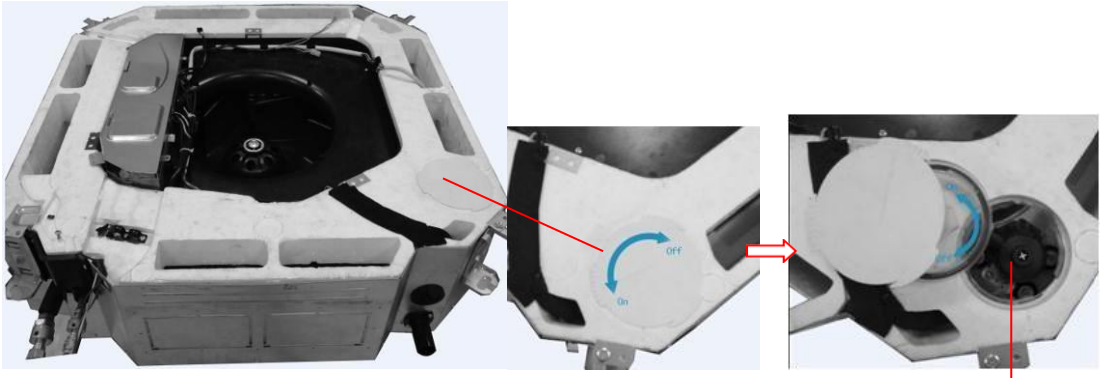

- Built-in draining pump to make sure condensed water drain out reliably.

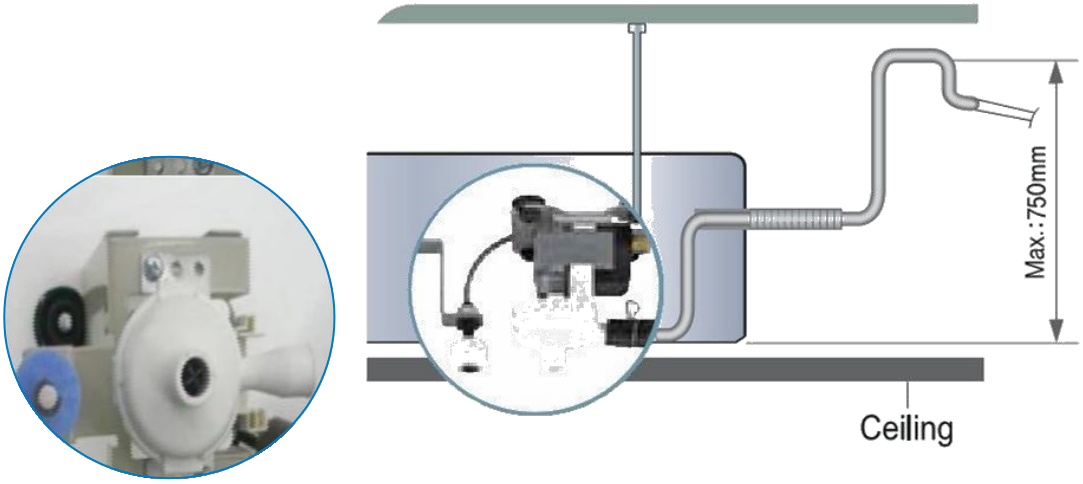

1.6 Terminals for alarm lamp and long-distance on-off controller connection are standard

- Reserve terminals for the connection of alarm lamp and long-distance on-off controller, more human control.

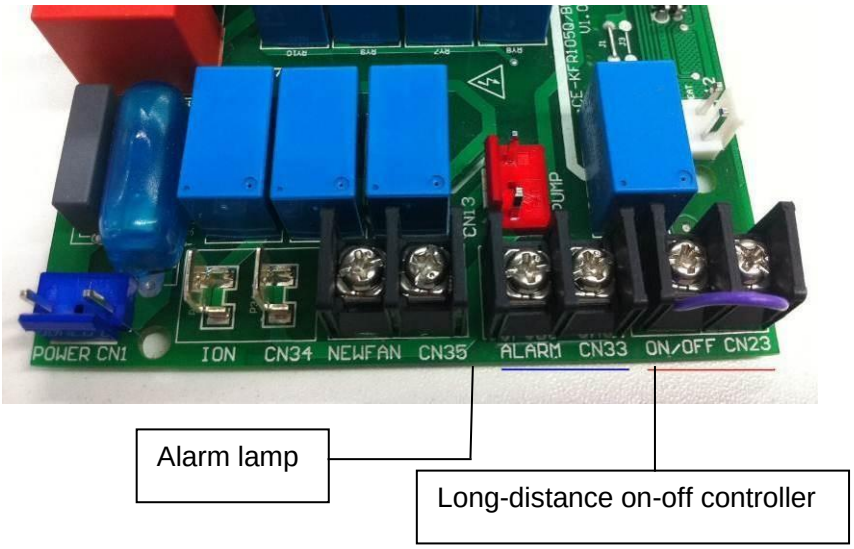

1.7 Twins Combination(24k)

- The units can be installed as Twin systems: one outdoor unit can connect with two indoor units. The indoor units can be combined in any of the different available ratings.

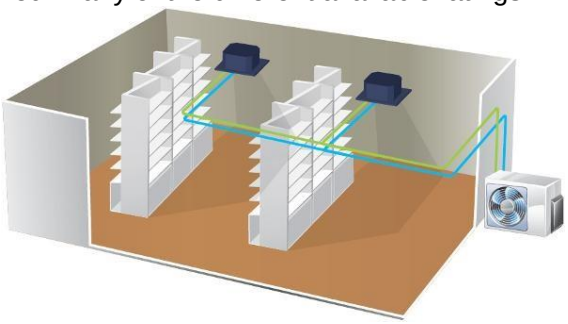

2. Dimensions

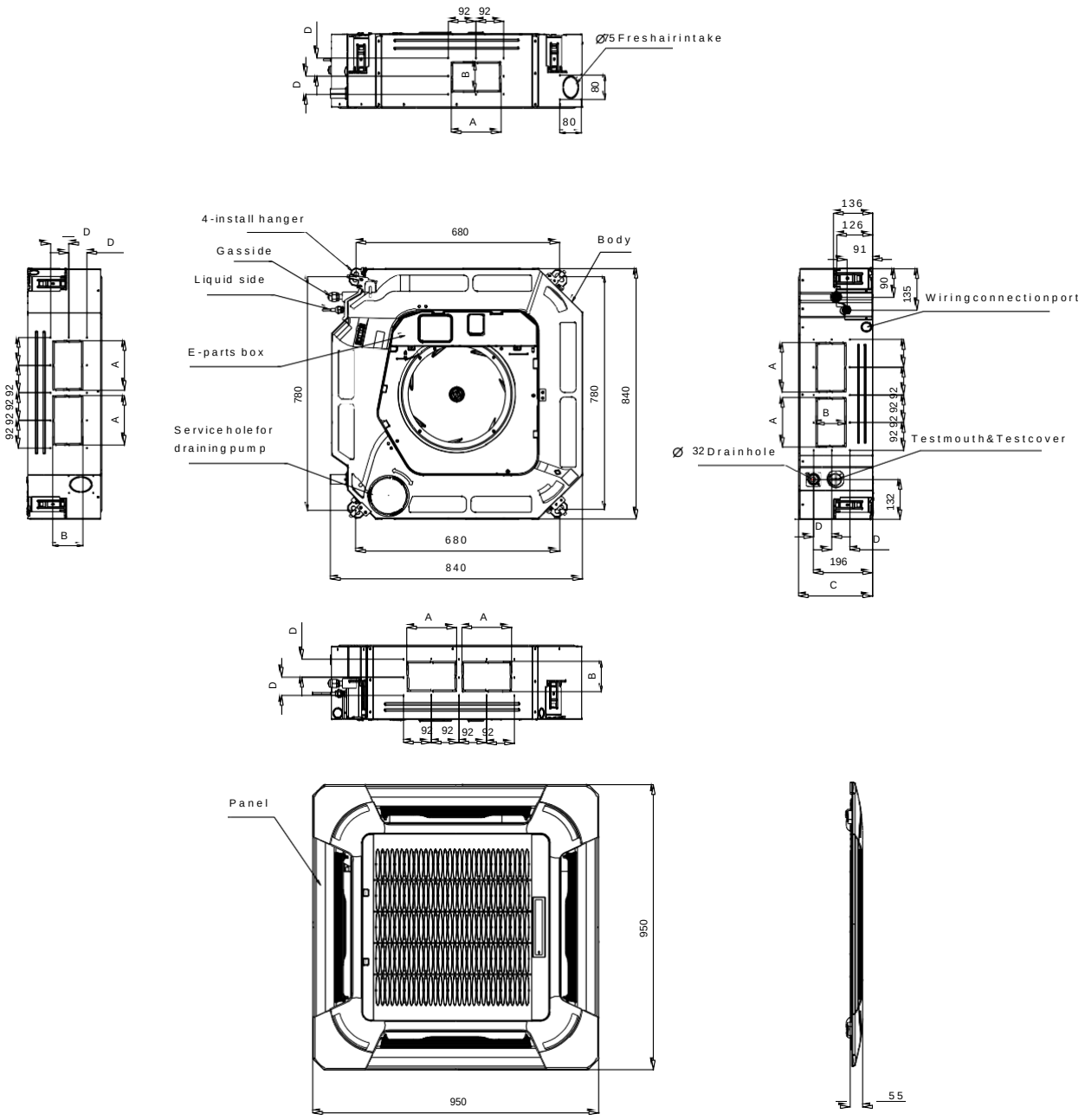

Unit: mm				
Model	A	B	C	D
KCD-24HRF32 KCD-36HRF32	160	95	245	60
KCD-48HRF32 KCD-55HRF32	160	95	287	60

3. Service Space

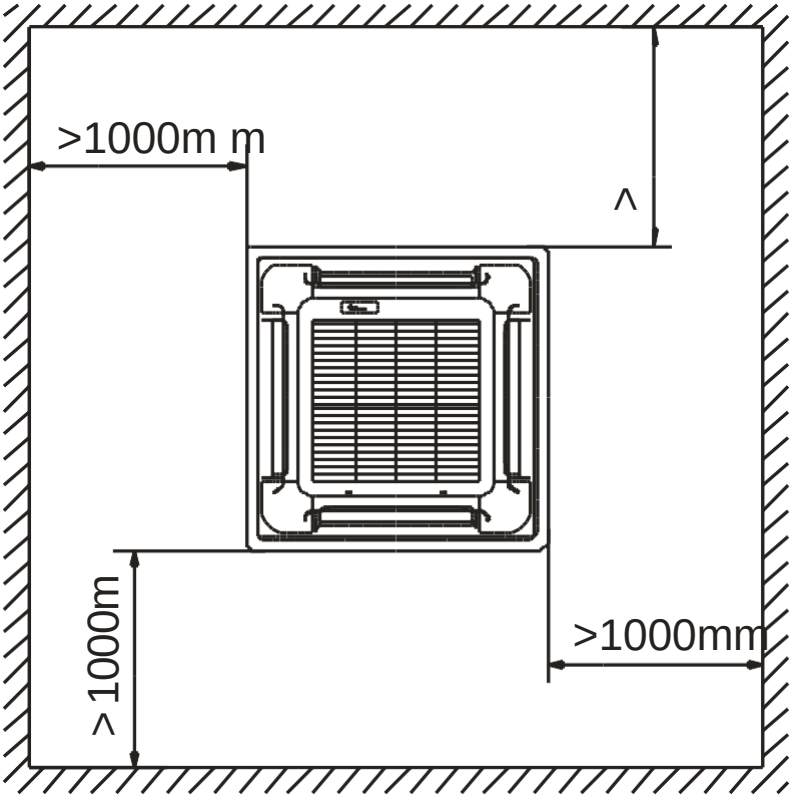

4. Wiring Diagrams

KCD-24HRF32, KCD-36HRF32, KCD-48HRF32, KCD-55HRF32

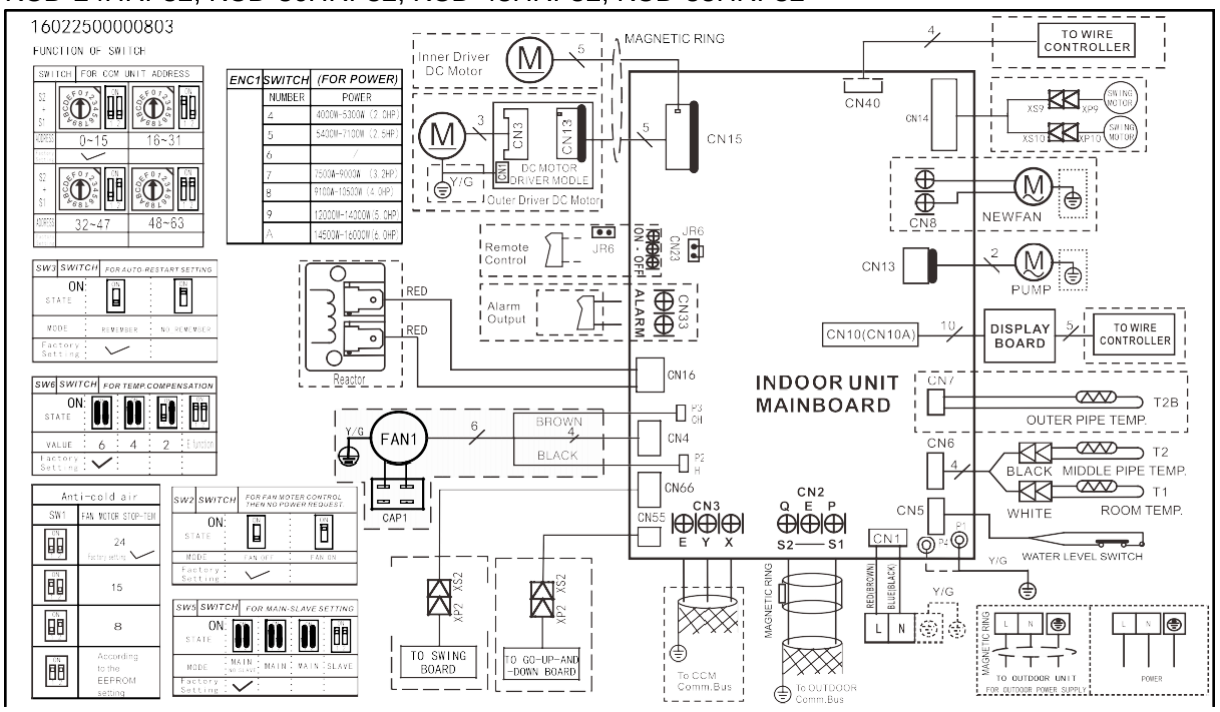

4.1 Some connectors introduce:

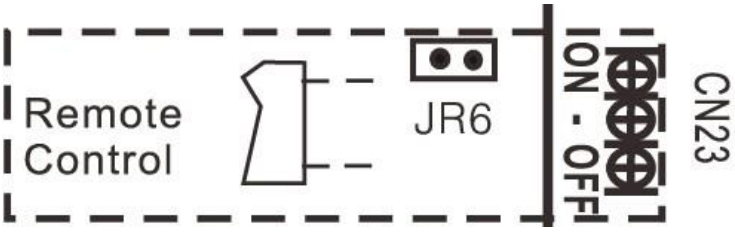

A For remote control (ON-OFF) terminal port CN23 and short connector of JR6

1. Remove the short connector of JR6 when you use ON-OFF function;
2. When remote switch off (OPEN), the unit would be off;
3. When remote switch on (CLOSE), the unit would be on;
4. When close/open the remote switch, the unit would be responded the demand within 2 seconds;
5. When the remote switch on. You can use remote controller/wire controller to select the mode what you want; when the remote switch off, the unit would not respond the demand from remote controller/wire controller.

When the remote switch off, but the remote controller/wire controller are on, CP code would be shown on the display board.

6. The voltage of the port is 12V DC, design Max. current is 5mA.

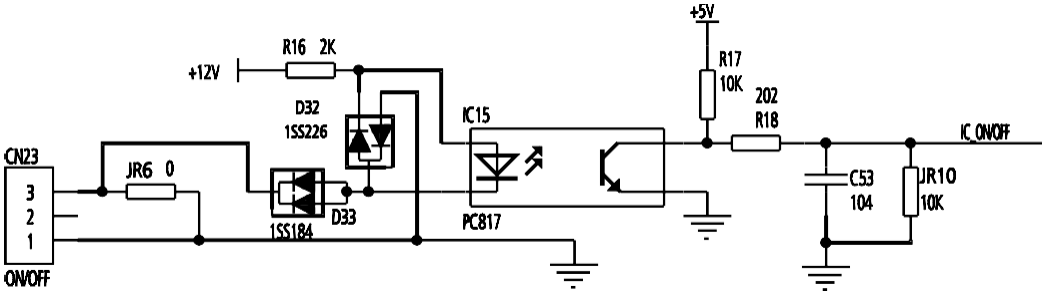

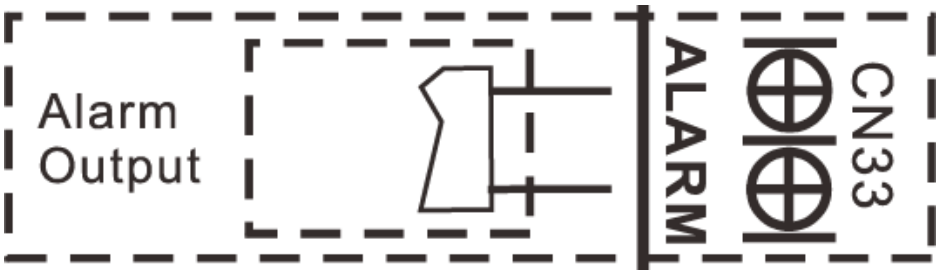

B For ALARM terminal port CN33

1. Provide the terminal port to connect ALARM, but no voltage of the terminal port , the power from the ALARM system (not from the unit)
2. Although design voltage can support higher voltage, but we strongly ask you connect the power less than 24V, current less than 0.5A
3. When the unit occurs the problem, the relay would be closed, then ALARM works

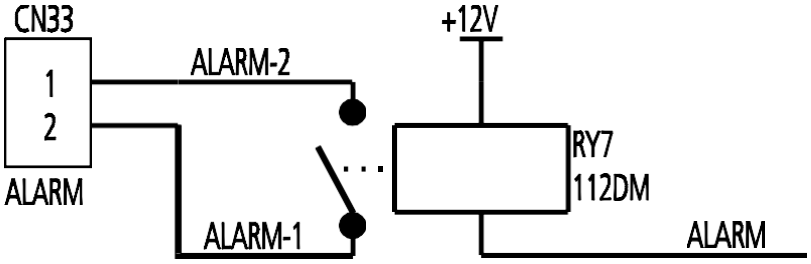

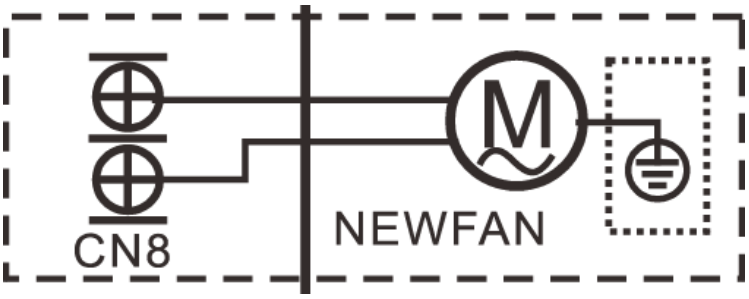

C. For new fresh motor terminal port CN8

1. Connect the fan motor to the port, no need care L/N of the motor;
2. The output voltage is the power supply;
3. The fresh motor cannot excess 200W or 1A, follow the smaller one;
4. The new fresh motor will be worked when the indoor fan motor work ;when the indoor fan motor stops, the new fresh motor would be stopped;
5. When the unit enter force cooling mode or capacity testing mode, the fresh motor isn’t work.

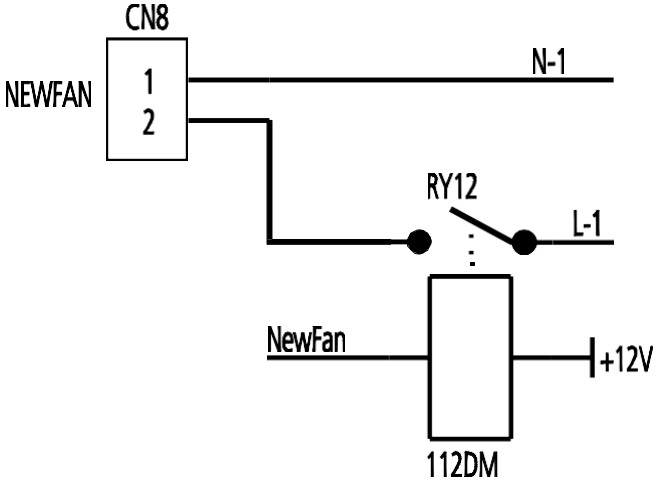
CN8
NEWFAN
1
2
N-1
RY12
L-1
NewFan
+12V
112DM

4.2 Micro-Switch Introduce:

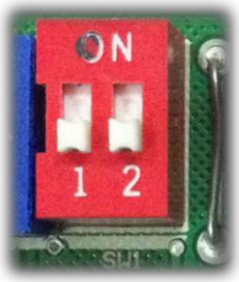

Anti-cold air	
SW1	FAN MOTOR STOP-TEM
ON 1 2	24 Factory setting ✓
ON 1 2	15
ON 1 2	8
ON 1 2	According to the EEPROM setting

A. Micro-switch SW1 is for selection of indoor fan stop temperature (TEL0) when it is in anti-cold wind action in heating mode.
Range: 24ºC, 15ºC, 8 ºC, according to EEROM setting (reserved for special customizing).

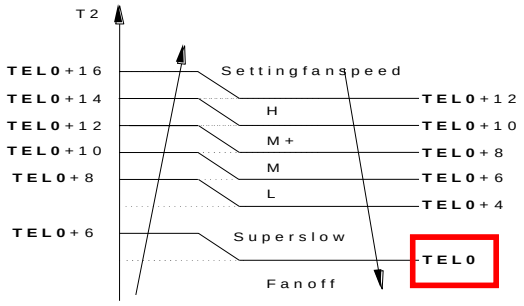

SW2	SWITCH	FOR FAN MOTER CONTROL THEN NO POWER REQUEST.	
ON: STATE		ON	ON
MODE		FAN OFF	FAN ON
Factory Setting		✓	

B.Micro-switch SW2 is for selection of indoor FAN ACTION if room temperature reaches the setpoint and the compressor stops.
Range: OFF (in 127s), Keep running.

SW3	SWITCH	FOR AUTO-RESTART SETTING	
ON: STATE		ON	ON
MODE		REMEMBER	NO_REMEMBER
Factory Setting		✓	

C.Micro-switch SW3 is for selection of auto-restart function.
Range: Active, inactive

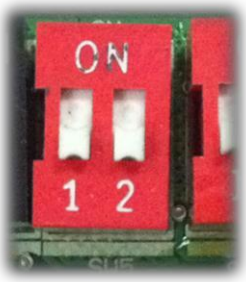

SW5	SWITCH	FOR MAIN-SLAVE SETTING		
STATE	ON	ON	ON	ON
MODE	MAIN NO SLAVE	MAIN	MAIN	SLAVE
Factory Setting	✓			

D. Micro-switch SW5 is for setting the master or slave unit when the unit is in twin connection.
Range: Master no slave (Normal 1 drive 1 connection), Master (2 positions without difference), Slave

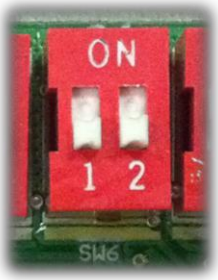

SW6	SWITCH	FOR TEMP. COMPENSATION		
STATE	ON	ON	ON	ON
VALUE	6	4	2	E function
Factory Setting	✓			

E.Micro-switch SW6 is for selection of temperature compensation in heating mode. This helps to reduce the real temperature difference between ceiling and floor so that the unit could run properly. If the height of installation is lower, smaller value could be chosen.
Range: 6ºC, 4ºC, 2ºC, E function (reserved for special customizing)

SWITCH	FOR CCM UNIT ADDRESS	
S2 + S1		
ADDRESS	0~15	16~31
Factory Setting	✓	
S2 + S1		
ADDRESS	32~47	48~63
Factory Setting		

F.Micro-switch S1 and dial-switch S2 are for address setting when you want to control this unit by a central controller.
Range: 00-63

ENC1	SWITCH	(FOR POWER)
	NUMBER	POWER
	4	4000W-5300W (2.0HP)
	5	5400W-7100W (2.5HP)
	6	/
	7	7500W-9000W (3.2HP)
	8	9100W-10500W (4.0HP)
	9	12000W-14000W (5.0HP)
	A	14500W-16000W (6.0HP)

G. Dial-switch ENC1: The indoor PCB is universal designed for whole series units from 18K to 55K. This ENC1 setting will tell the main program what size the unit is.

NOTE: Usually there is glue on it because the switch position cannot be changed at random unless you want to use this PCB as a spare part to use in another unit. Then you have to select the right position to match the size of the unit.

5. Air Velocity Distributions (Reference Data)

24K:

Cooling:

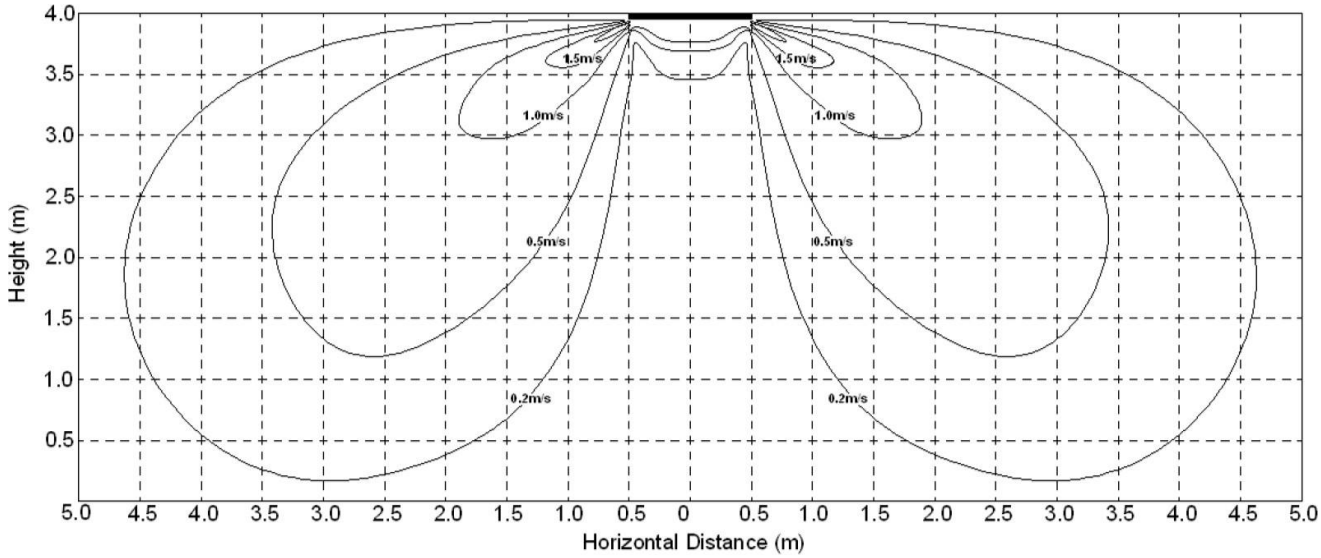

Heating:

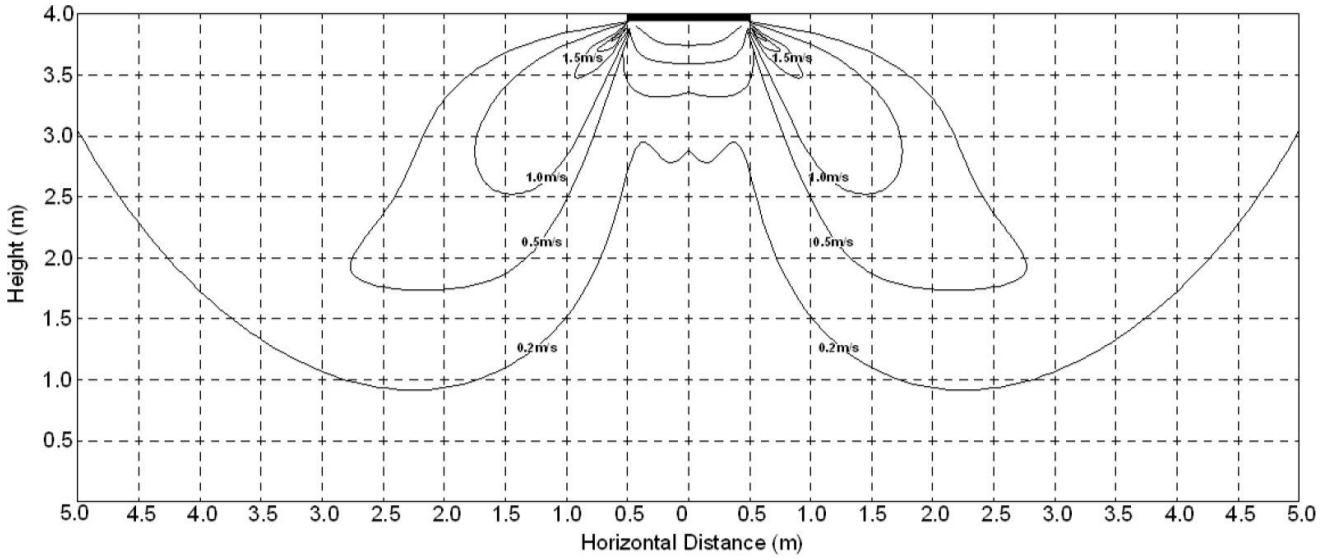

30-42K:

Cooling:

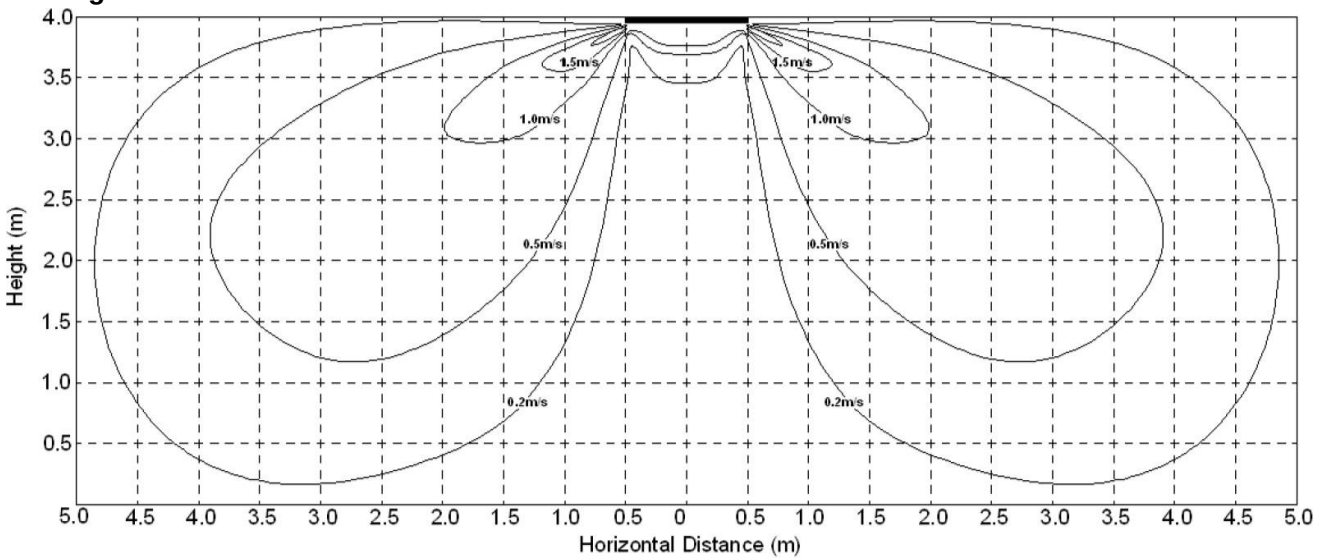

Heating:

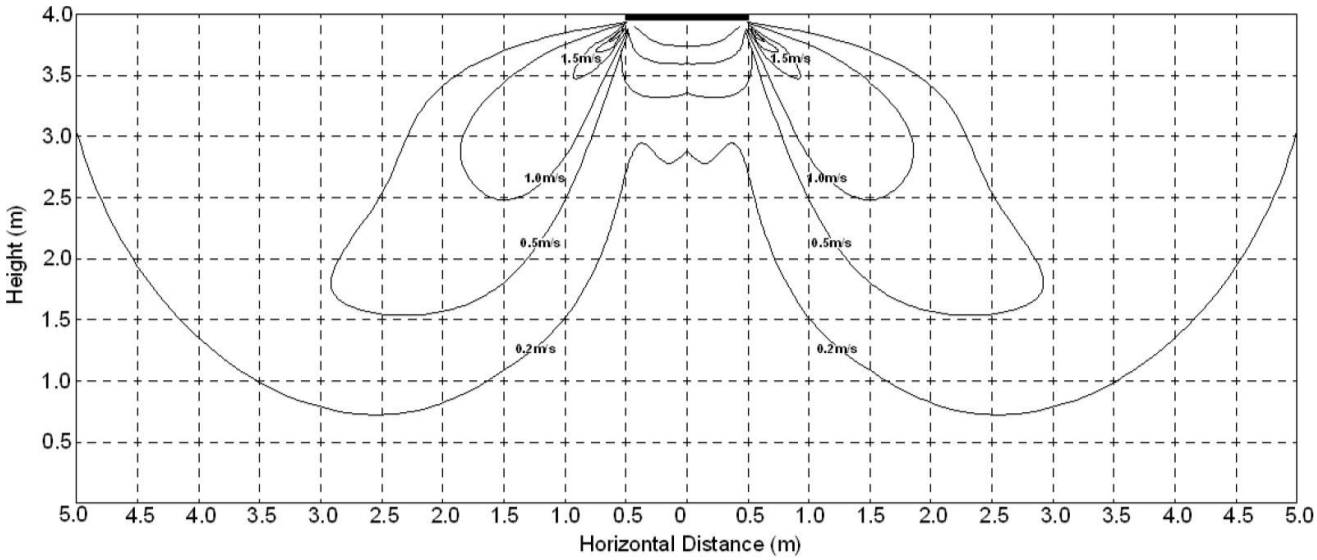

48-55K :

Cooling:

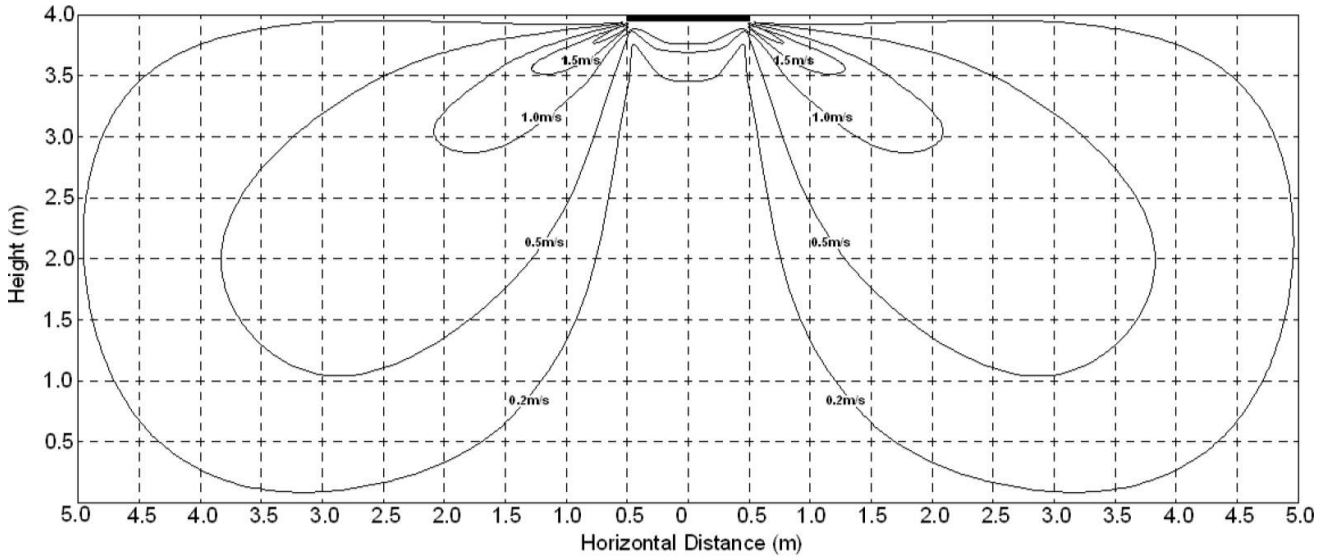

Heating:

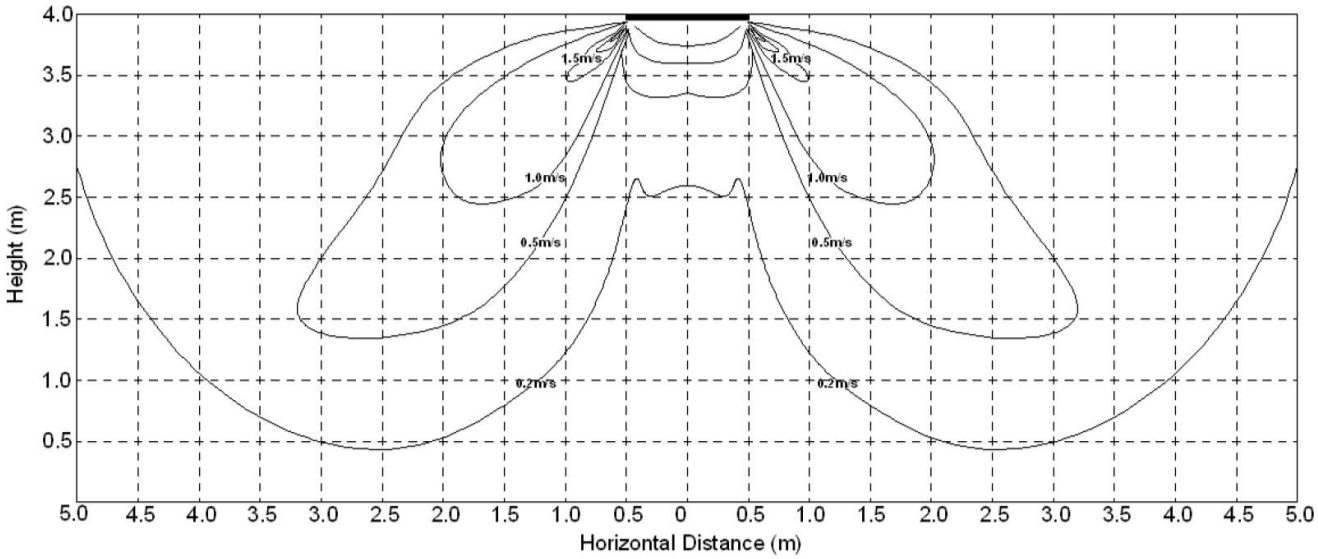

6. Electric Characteristics

Model	Indoor Unit				Power Supply
	Hz	Voltage	Min	Max	MFA
KCD-24HRF32	50	220-240V	198V	254V	10
KCD-36HRF32	50	220-240V	198V	254V	10
KCD-48HRF32	50	220-240V	198V	254V	/
KCD-55HRF32	50	220-240V	198V	254V	/

Notes:
MFA: Max. Fuse Amps. (A)

7. Sound Levels

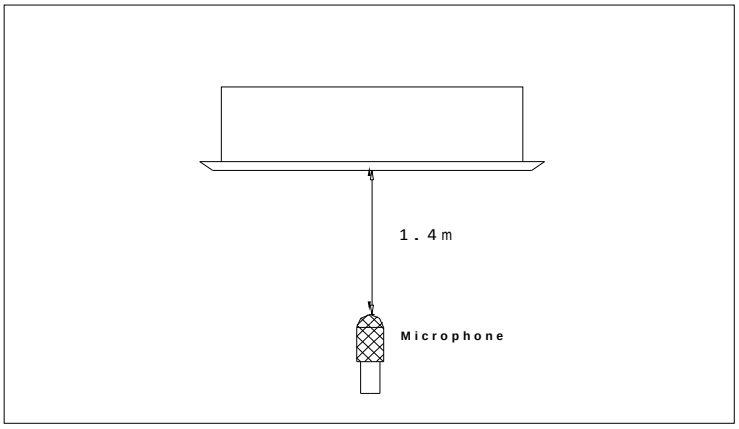

Model	Noise Power dB(A)	Noise level dB(A)		
		H	M	L
KCD-24HRF32	57	47	43	40
KCD-36HRF32	60	52	49	46
KCD-48HRF32	69	52	50	49
KCD-55HRF32	65	53	51	48

8. Accessories

	Name	Shape	Quantity
Installation Fittings	Installation paper board		1
Tubing & Fittings	Soundproof / insulation sheath		1
Drainpipe Fittings	Out-let pipe sheath		1
	Out-let pipe clasp		1
	Drain joint		1
	Seal ring		1
Remote controller & Its Frame(The product you have might not be provided the following accessories)	Remote controller & Its Frame		1
	Remote controller holder		1
	Mounting screw(ST2.9×10-C-H)		2
	Remote controller manual		1
	Alkaline dry batteries (AM4)		2
Others	Owner's manual		1
	Installation manual		1
Installation accessory (The product you have might not be provided the following accessories	Expansible hook	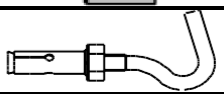	4
	Installation hook		4
	Orifice	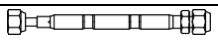	1

9. The Specification of Power

Model(kBtu/h)		24	36	48~55
Indoor Power	Phase	1-phase	1-phase	———
	Frequency and Voltage	220-240V, 50Hz	220-240V, 50Hz	———
	POWER WIRING (mm^2)	3×1.0(3×2.5 with auxiliary electric heater)	3×1.0(3×2.5 with auxiliary electric heater)	———
CIRCUIT BREAKER/Fuse (A)		15/10	15/10	———
Outdoor Power	Phase	1-phase	3-phase	3-phase
	Frequency and Voltage	220-240V, 50Hz	380-415V, 50Hz	380-415V, 50Hz
	POWER WIRING (mm2)	3×2.5	5×2.5	5×2.5
CIRCUIT BREAKER/Fuse (A)		25/20	25/20	30/25
Indoor/Outdoor Connecting Wiring (Weak Electric Signal) (mm^2)		2×0.2	2×0.2	2×0.2
Indoor/Outdoor Connecting Wiring (Strong Electric Signal) (mm^2)		———	———	3×1.0

10. Field Wiring

KCD-24HRF32, KCD-36HRF32

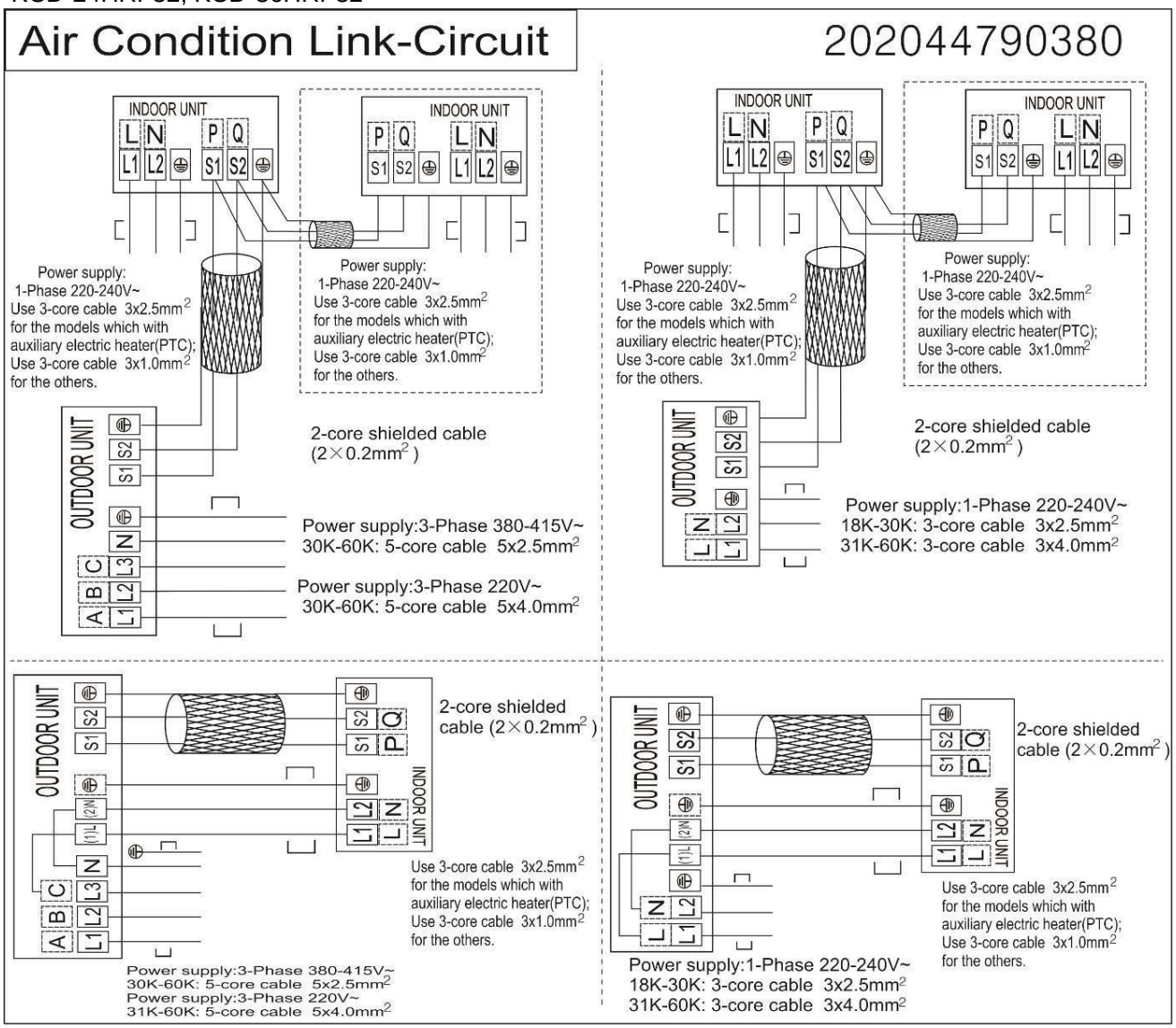

KCD-48HRF32, KCD-55HRF32

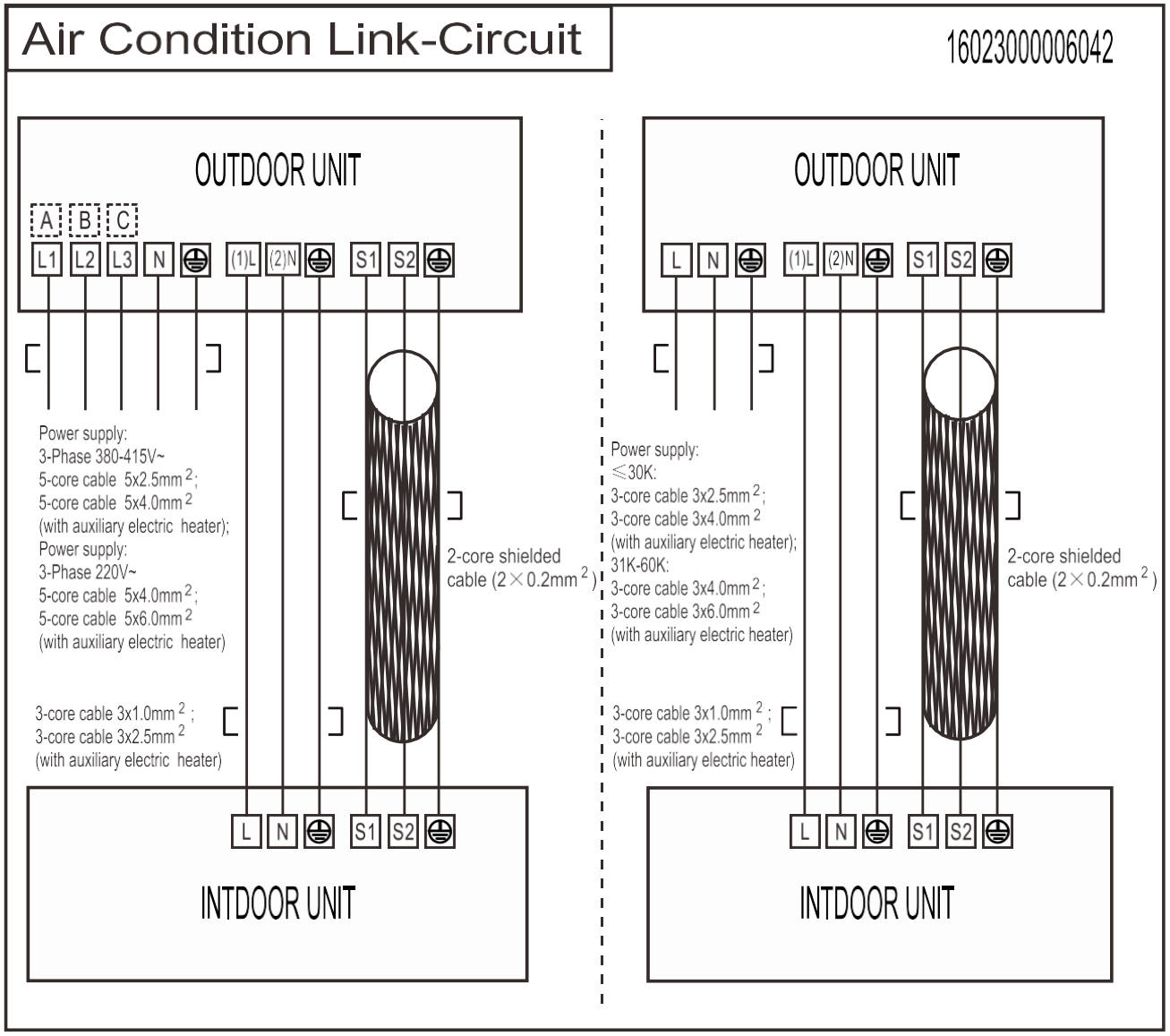

A6 Duct Type

1. Features 28

2. Dimensions 31

3. Service Space 32

4. Wiring Diagrams 33

5. Static Pressure.....39

6. Electric Characteristics.....45

7. Sound Levels 46

8. Accessories.....47

9. The Specification of Power.....48

10. Field Wiring 49

1. Features

1.1 Higher Static Pressure

- As a ducted air conditioner with medium static pressure, it has the widest static pressure range.
- The maximum static pressure reaches 160 Pa

1.2 Slim Design

- The industry Lowest height is designed to be fitted into tight roof spaces.

*18K unit - 210mm,24K/36K unit - 249mm, 48K unit -300mm

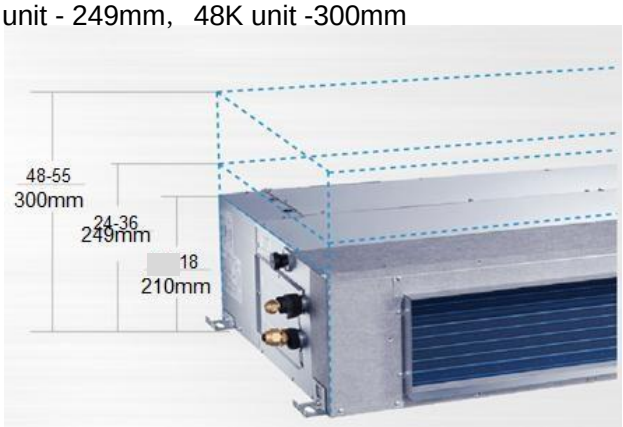

1.3 Constant air volume control

- For ordinary duct, when the static pressure exceeds the expected range, it is fairly difficult even for an experienced installer to calculate and adjust the air volume precisely.
- With constant air volume control technology, the duct will automatically adjusts to perfect static pressure and keep constant air volume.

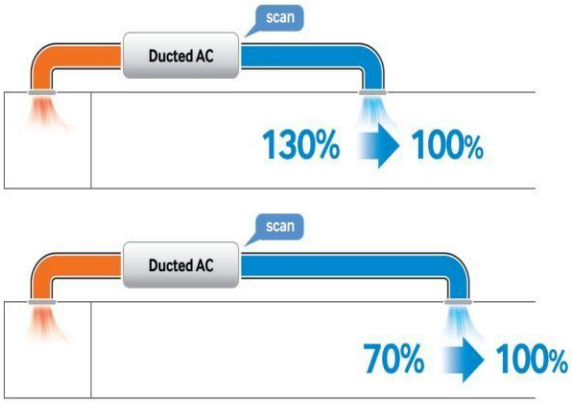

1.4 Flexible Air Intake Way (Bottom side or Rear side)

- The frame size of air inlet in rear and bottom is the same. It’s very easy to switch to match different application.

Air intake from rear (Standard)

Air intake from bottom (Optional)

1.5 Communication wire connection

- A6 duct uses two wires without polarity connection way, which almost has no mistake during the installation.

1.6 Easy Clean

- With a larger window design, once the motor and the blower wheels have been detached, heat exchanger and water receiver tray in behind can be seen very clearly. Dust can be easily removed from the inside by vacuum

1.7 Fresh air intake function(Optional)

- Install one duct from the reserved fresh-air intake to outdoor.
  Continually inhale the fresh air to improve the quality of the indoor air, fulfills air quality more healthy and comfortable.
- A ventilation motor (provided by the installer) can be installed inside the fresh air duct to improve the fresh air volume. There are reserved ports for this motor on main PCB (Standard for 3D inverter units, and only optional for DC inverter 53~160 units).

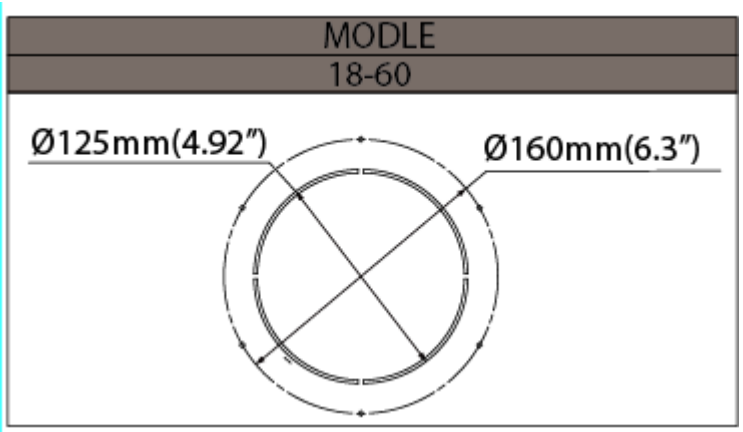

1.8 Built-in drain pump (Optional)

- Built-in drain pump can lift the water to 750mm upmost, which widens the drainage piping range.

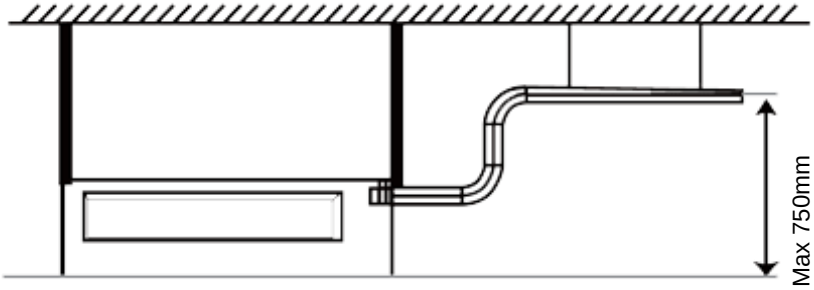

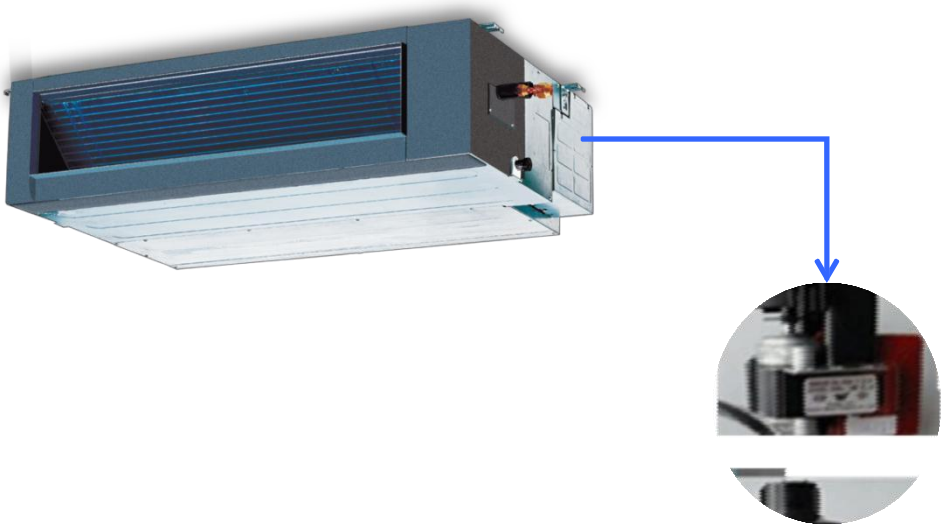

2. Dimensions

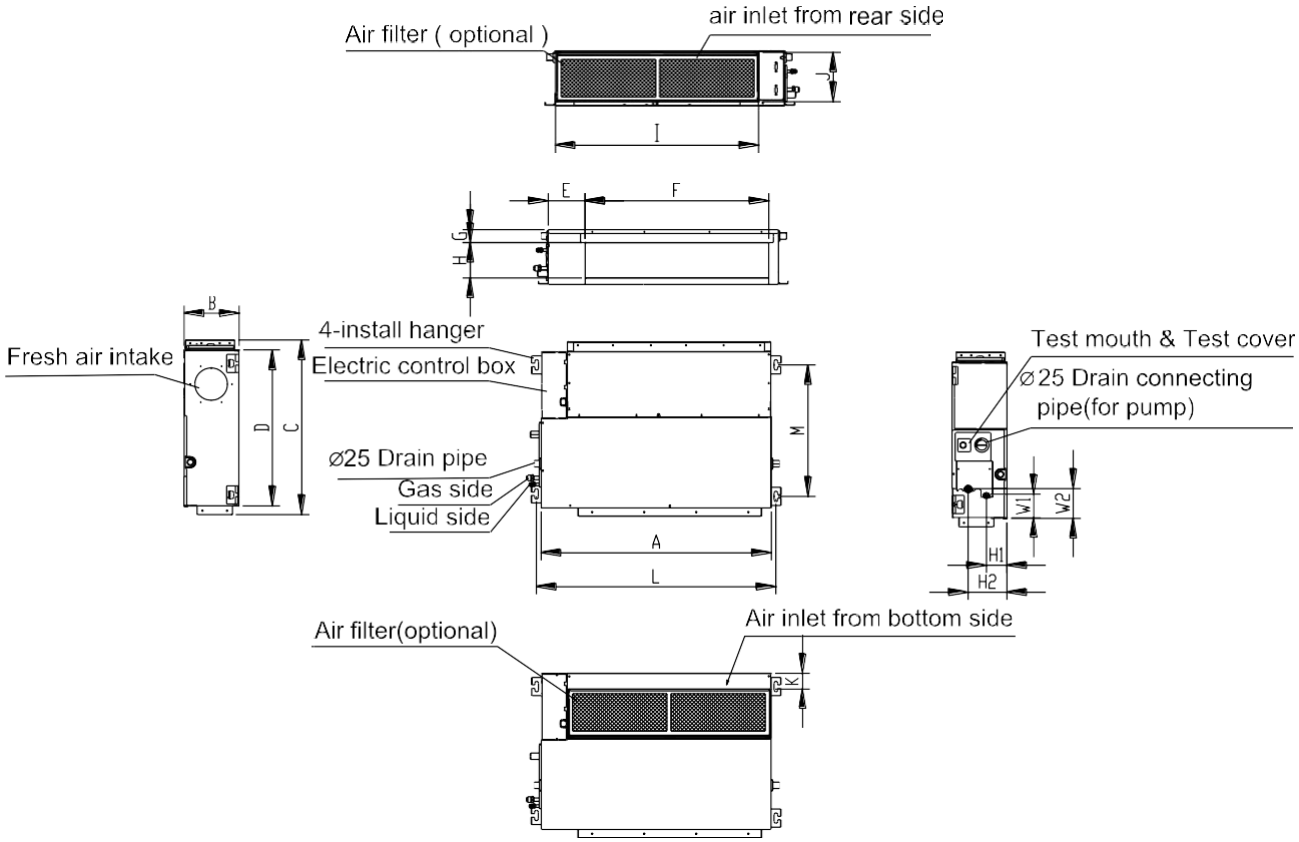

Model (KBtu/h)	unit	A	B	C	D	E	F	G	H	I	J	K	L	M	H1	H2	W1	W2
18	mm	880	210	674	600	140	706	50	136	782	190	40	920	508	78	148	88	112
	inch	34.65	8.27	26.54	23.62	5.51	27.80	1.97	5.35	30.79	7.48	1.57	36.22	20.00	3.07	5.83	3.46	4.41
24	mm	1100	249	774	700	140	926	50	175	1001	228	5	1140	598	80	150	130	155
	inch	43.31	9.80	30.47	27.56	5.51	36.46	1.97	6.89	39.41	8.98	0.20	44.88	23.54	3.15	5.91	5.12	6.10
36	mm	1360	249	774	700	140	1186	50	175	1261	228	5	1400	598	80	150	130	155
	inch	53.54	9.80	30.47	27.56	5.51	46.69	1.97	6.89	49.65	8.98	0.20	55.12	23.54	3.15	5.91	5.12	6.10
48~55	mm	1200	300	874	800	123	1044	50	227	1101	280	5	1240	697	80	150	185	210
	inch	47.24	11.81	34.41	31.5	4.84	41.1	1.97	8.94	43.35	11.02	0.20	48.82	27.44	3.15	5.91	7.28	8.27

3. Service Space

Ensure enough space required for installation and maintenance.

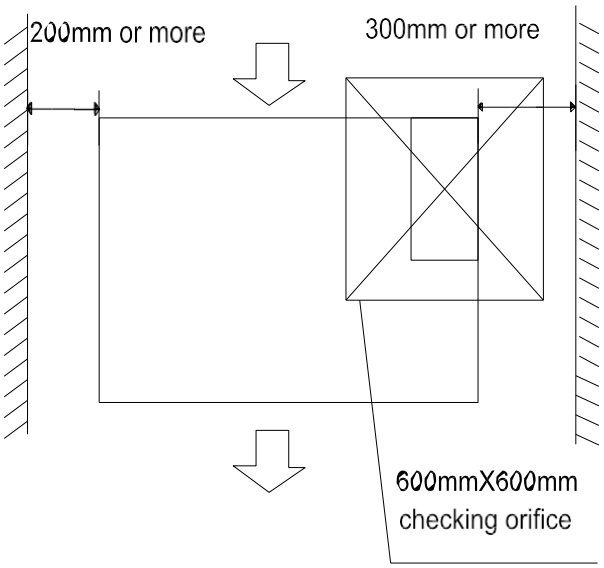

4. Wiring Diagrams

KTI-18HWF32, KTI-24HWF32, KTI-36HWF32, KTI-48HWF32, KTI-55HWF32

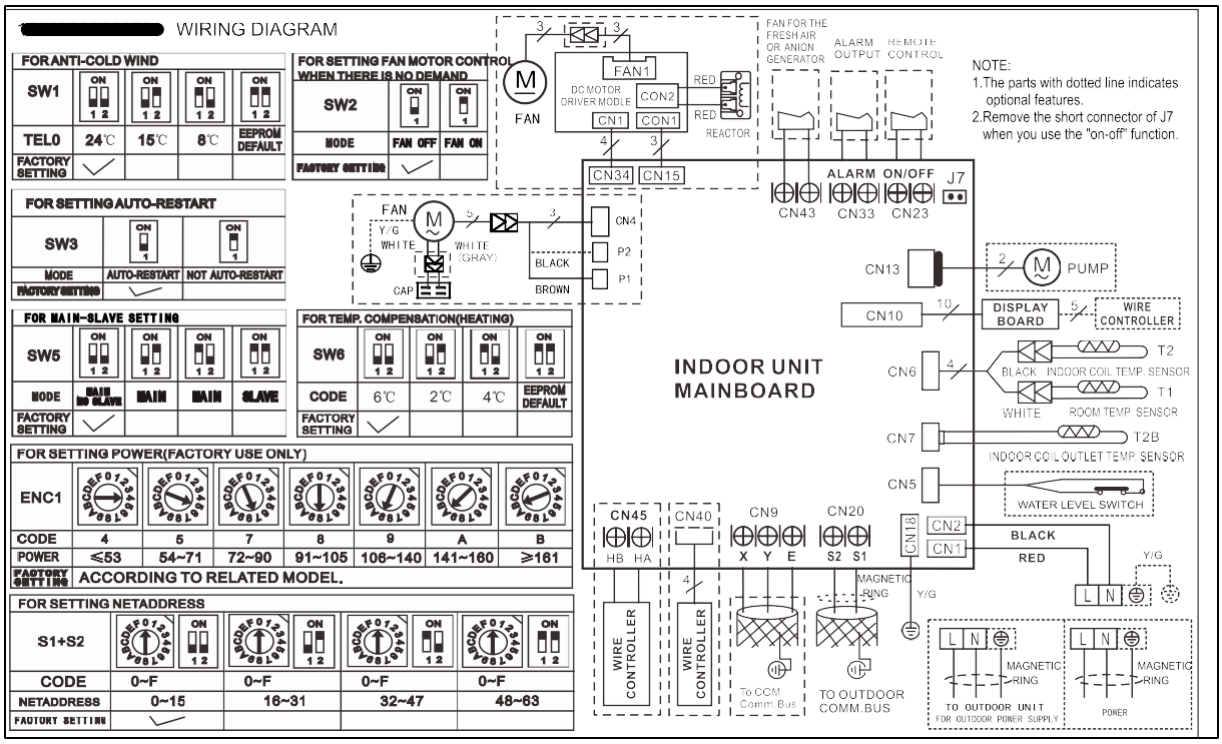

4.1 Some connectors introduce:

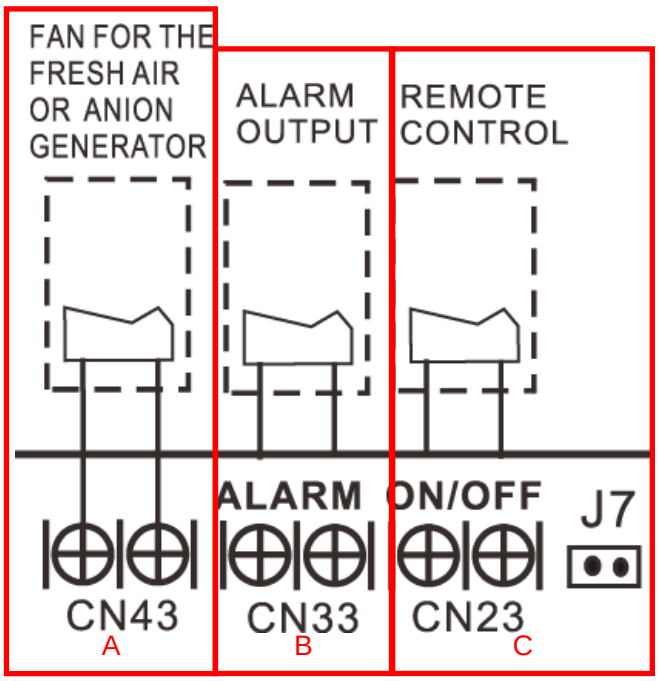

A. For new fresh motor terminal port (also for Anion generator) CN43:

1. Connect the fan motor to the port, no need care L/N of the motor;
2. The output voltage is the power supply;
3. The fresh motor cannot excess 200W or 1A, follow the smaller one;
4. The new fresh motor will be worked when the indoor fan motor work; when the indoor fan motor stops, the new fresh motor would be stopped;
5. When the unit enter force cooling mode or capacity testing mode, the fresh motor isn't work.

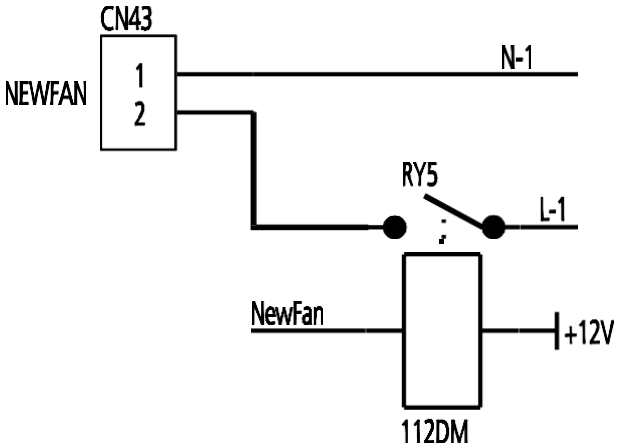

B For ALARM terminal port CN33

1. Provide the terminal port to connect ALARM, but no voltage of the terminal port, the power from the ALARM system (not from the unit)
2. Although design voltage can support higher voltage, but we strongly ask you connect the power less than 24V, current less than 0.5A.
3. When the unit occurs the problem, the relay would be closed, then ALARM works.

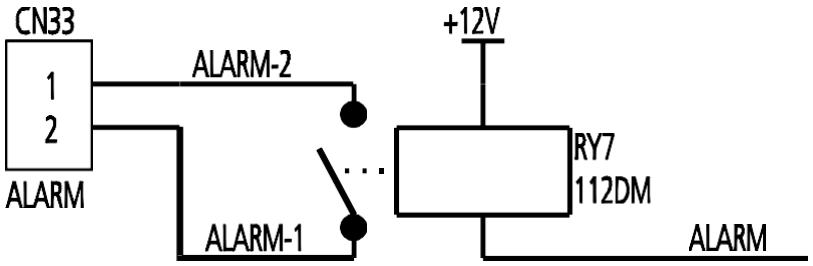

C. For remote control (ON-OFF) terminal port CN23 and short connector of J7

1. Remove the short connector of J7 when you use ON-OFF function;
2. When remote switch off (OPEN), the unit would be off;
3. When remote switch on (CLOSE), the unit would be on;
4. When close/open the remote switch, the unit would be responded the demand within 2 seconds;
5. When the remote switch on. You can use remote controller/wire controller to select the mode what you want; when the remote switch off, the unit would not respond the demand from remote controller/wire controller.

When the remote switch off, but the remote controller / wire controller are on, CP code would be shown on the display board.

6. The voltage of the port is 12V DC, design Max. current is 5mA.

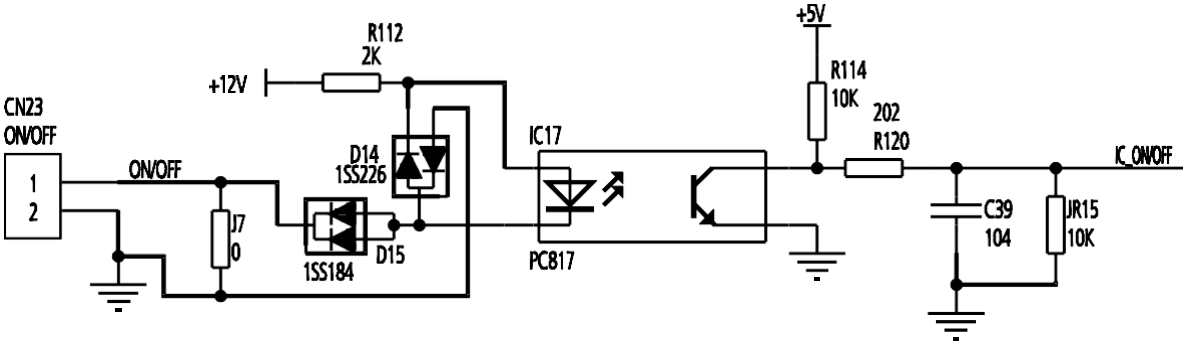

4.2 Micro-Switch Introduce:

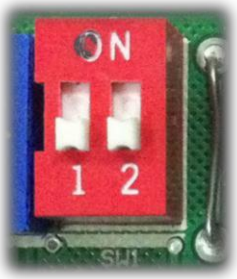

FOR ANTI-COLD WIND				
SW1	ON 1 2	ON 1 2	ON 1 2	ON 1 2
TEL0	24℃	15℃	8℃	EEPROM DEFAULT
FACTORY SETTING	✓			

A. Micro-switch SW1 is for selection of indoor fan stop temperature (TEL0) when it is in anti-cold wind action in heating mode.
Range: 24ºC, 15ºC, 8 ºC, according to EEROM setting (reserved for special customizing).
For 12K:

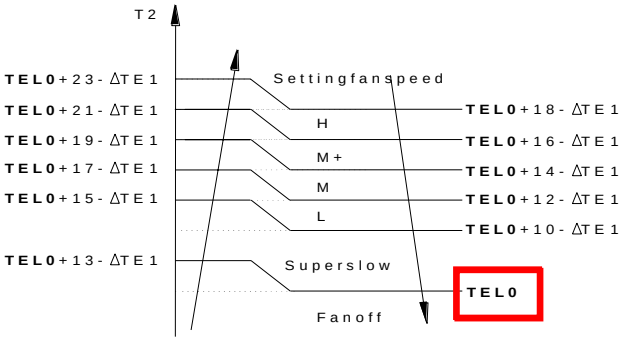

For 18K~55K:

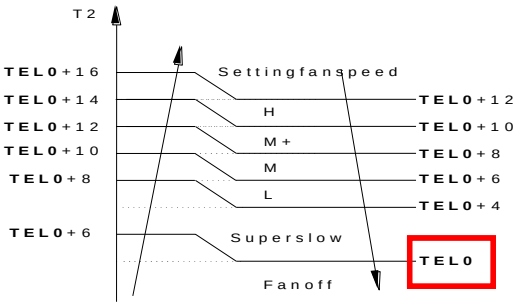

FOR SETTING FAN MOTOR CONTROL WHEN THERE IS NO DEMAND		
SW2	ON 1	ON 1
MODE	FAN OFF	FAN ON
FACTORY SETTING	✓	

B. Micro-switch SW2 is for selection of indoor FAN ACTION if room temperature reaches the setpoint and the compressor stops.
Range: OFF (in 127s), Keep running.

FOR SETTING AUTO-RESTART		
SW3	ON	ON
MODE	AUTO-RESTART	NOT AUTO-RESTART
FACTORY SETTING		

C. Micro-switch SW3 is for selection of auto-restart function.
Range: Active, inactive

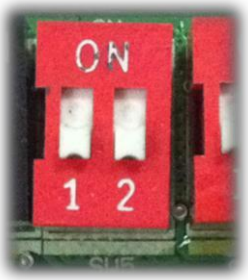

FOR MAIN-SLAVE				
SW5	ON	ON	ON	ON
MODE	MAIN NO SLAVE			SLAVE
FACTORY SETTING				

D. Micro-switch SW5 is for setting the master or slave unit when the unit is in twin connection.
Range: Master no slave (Normal 1 drive 1 connection), Master (2 positions without difference), Slave

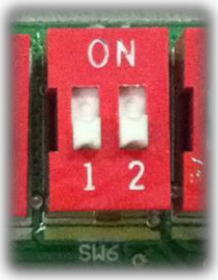

FOR TEMP. COMPENSATION(HEATING)				
SW6	ON 1 2	ON 1 2	ON 1 2	ON 1 2
CODE	6℃	2℃	4℃	EEPROM DEFAULT
FACTORY SETTING	✓			

E.Micro-switch SW6 is for selection of temperature compensation in heating mode. This helps to reduce the real temperature difference between ceiling and floor so that the unit could run properly. If the height of installation is lower, smaller value could be chosen.
Range: 6ºC, 4ºC, 2ºC, E function (reserved for special customizing)

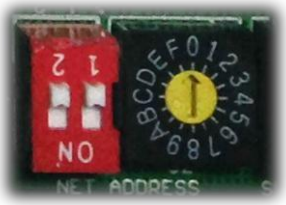

FOR SETTING NETADDRESS				
S1+S2	0123456789ABCDEF ON 1 2	0123456789ABCDEF ON 1 2	0123456789ABCDEF ON 1 2	0123456789ABCDEF ON 1 2
CODE	0~F	0~F	0~F	0~F
NETADDRESS	0~15	16~31	32~47	48~63
FACTORY SETTING	✓			

F. Micro-switch S1 and dial-switch S2 are for address setting when you want to control this unit by a central controller.
Range: 00-63

FOR SETTING POWER(FACTORY USE ONLY)							
ENC1							
CODE	4	5	7	8	9	A	B
POWER	≤53	54~71	72~90	91~105	106~140	141~160	≥161
FACTORY SETTING	ACCORDING TO RELATED MODEL.						

G. Dial-switch ENC1: The indoor PCB is universal designed for whole series units from 18K to 55K. This ENC1 setting will tell the main program what size the unit is.
NOTE: Usually there is glue on it because the switch position cannot be changed at random unless you want to use this PCB as a spare part to use in another unit. Then you have to select the right position to match the size of the unit.
“53” means 5.3kW (18K),“105” means 10.5kW(36K), and so on.

5. Static Pressure

18k

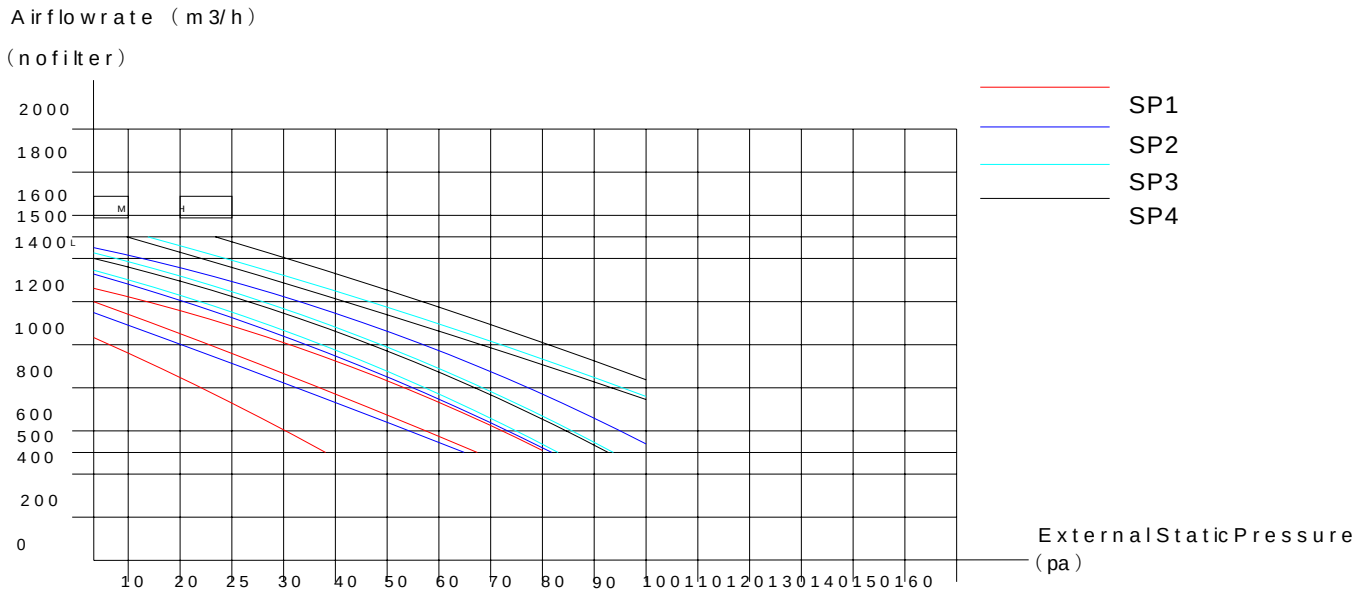
Airflowrate （m3/h）
（nofilter）
2000
1800
1600
1500
1400
1200
1000
800
600
500
400
200
0
M
H
L
10 20 25 30 40 50 60 70 80 90 100 110 120 130 140 150 160
ExternalStaticPressure
（pa）
SP1
SP2
SP3
SP4

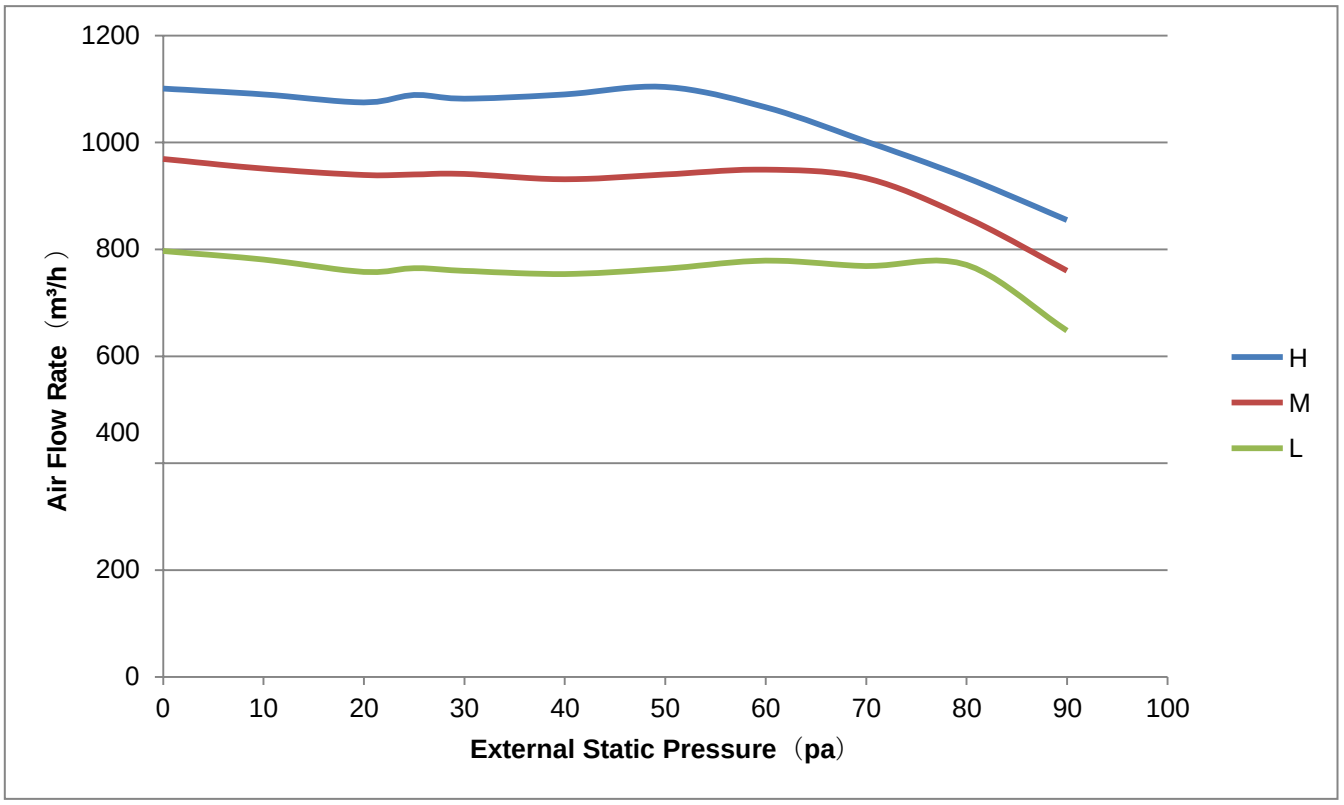
1200
1000
800
600
400
200
0
Air Flow Rate（m³/h）
0 10 20 30 40 50 60 70 80 90 100
External Static Pressure（pa）
H
M
L

24k

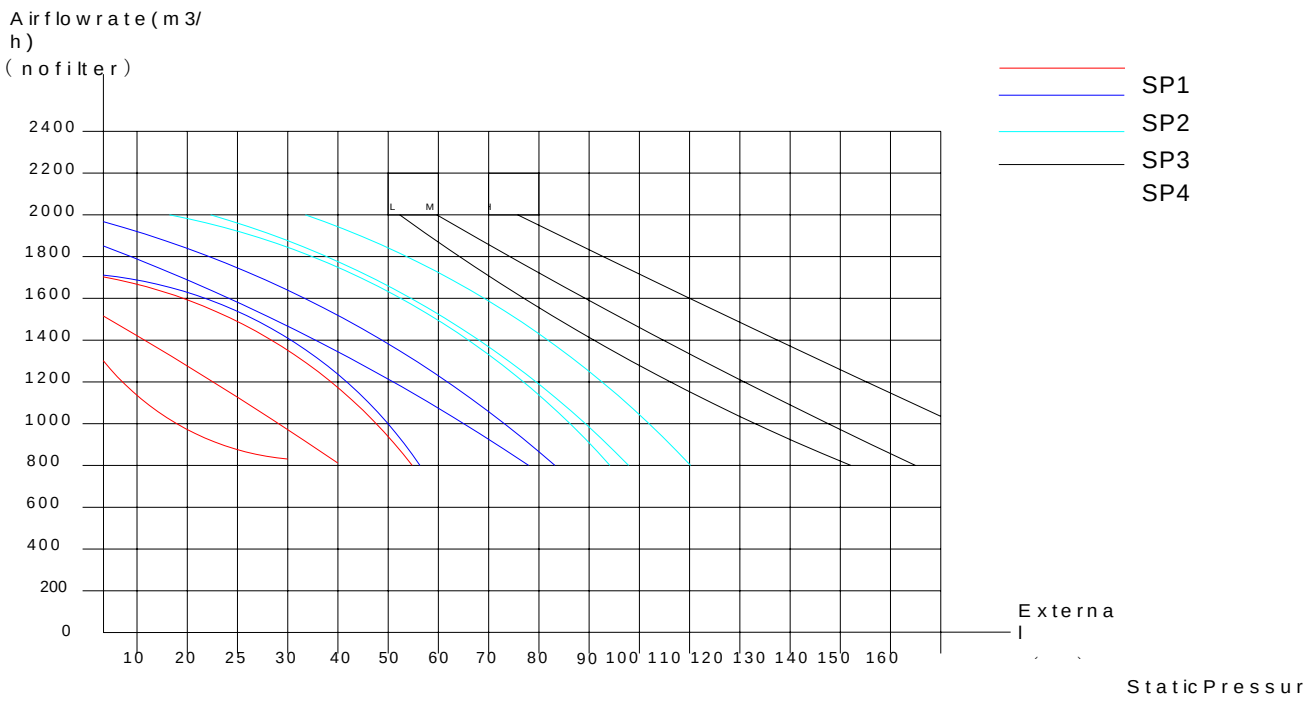
Airflowrate(m3/h)
(nofilter)
2400
2200
2000
1800
1600
1400
1200
1000
800
600
400
200
0
10 20 25 30 40 50 60 70 80 90 100 110 120 130 140 150 160
Externa
l
StaticPressur
SP1
SP2
SP3
SP4

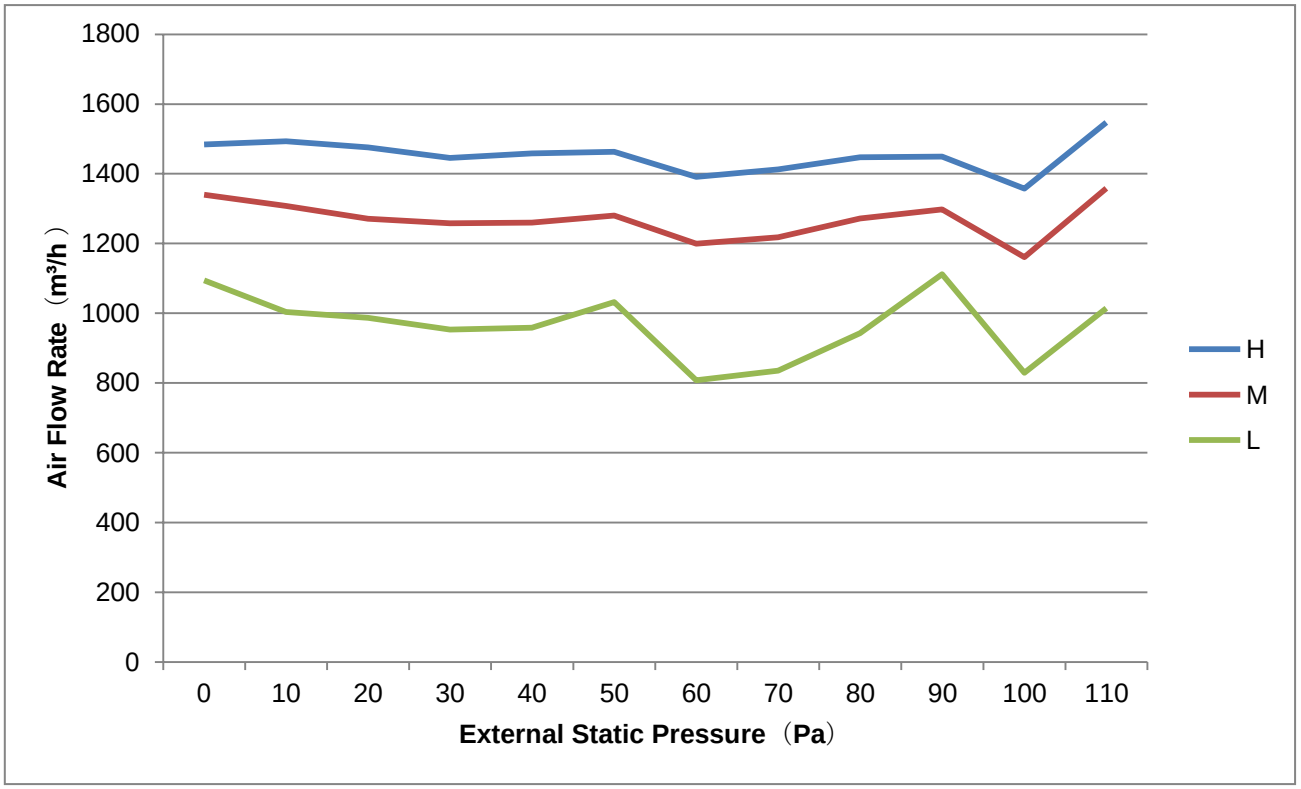
1800
1600
1400
1200
1000
800
600
400
200
0
Air Flow Rate（m³/h）
0 10 20 30 40 50 60 70 80 90 100 110
External Static Pressure（Pa）
H
M
L

30k/36k

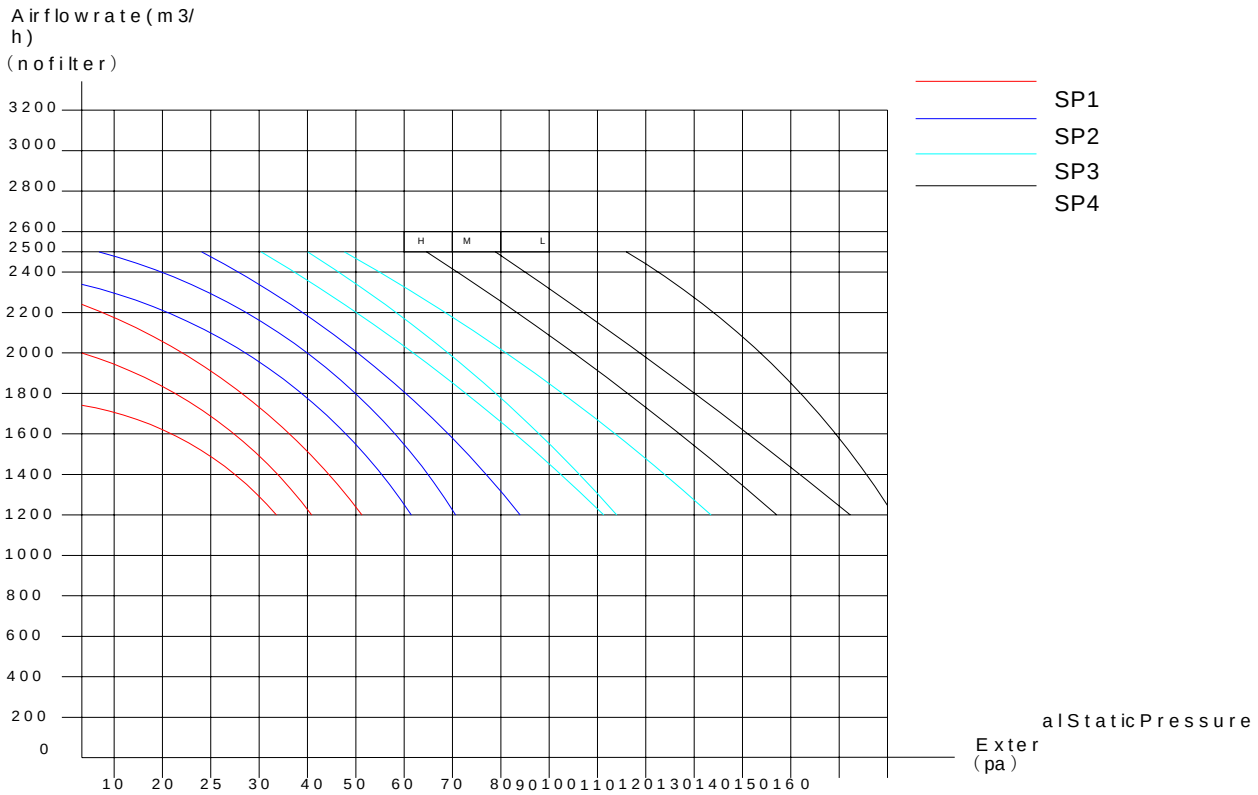
Airflowrate(m3/h)
(nofilter)
3200
3000
2800
2600
2500
2400
2200
2000
1800
1600
1400
1200
1000
800
600
400
200
0
H
M
L
SP1
SP2
SP3
SP4
alStaticPressure
Exter
(pa)
10 20 25 30 40 50 60 70 80 90 100 110 120 130 140 150 160

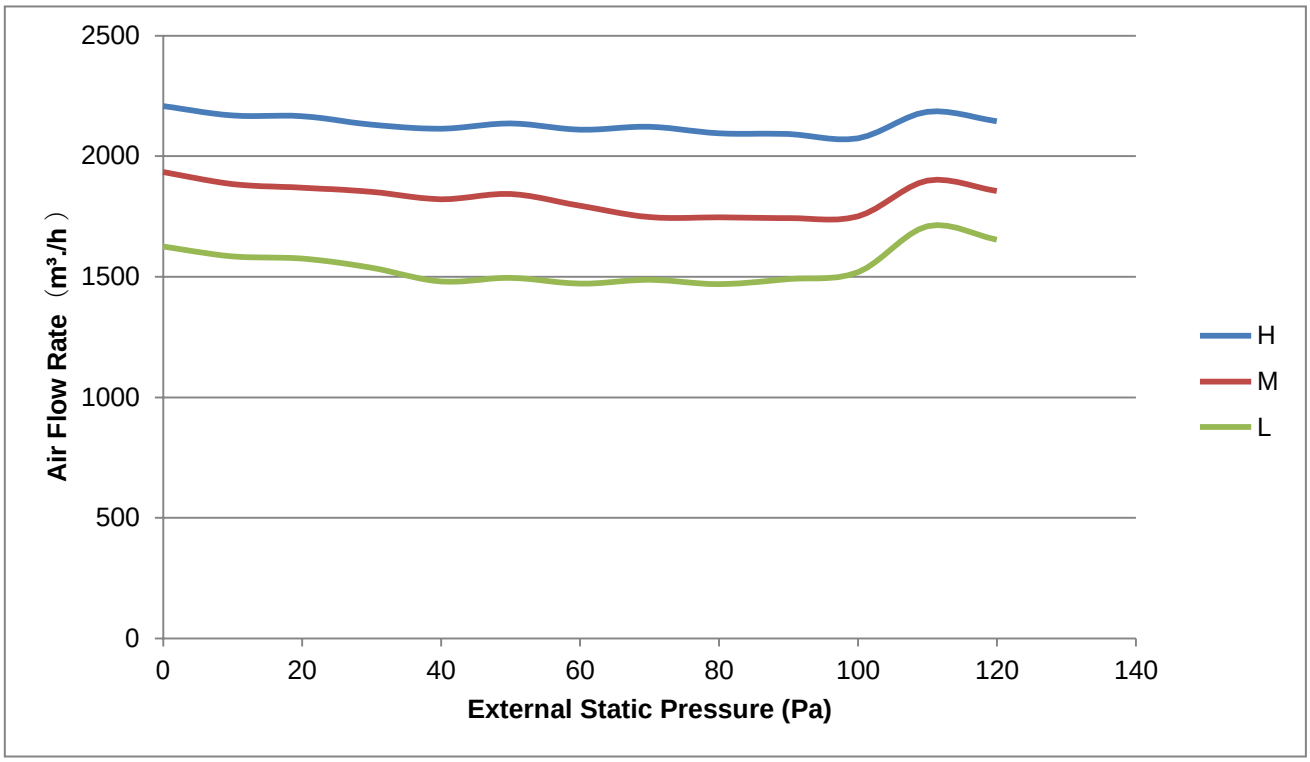
2500
2000
1500
1000
500
0
Air Flow Rate (m³/h)
0 20 40 60 80 100 120 140
External Static Pressure (Pa)
H
M
L

48k

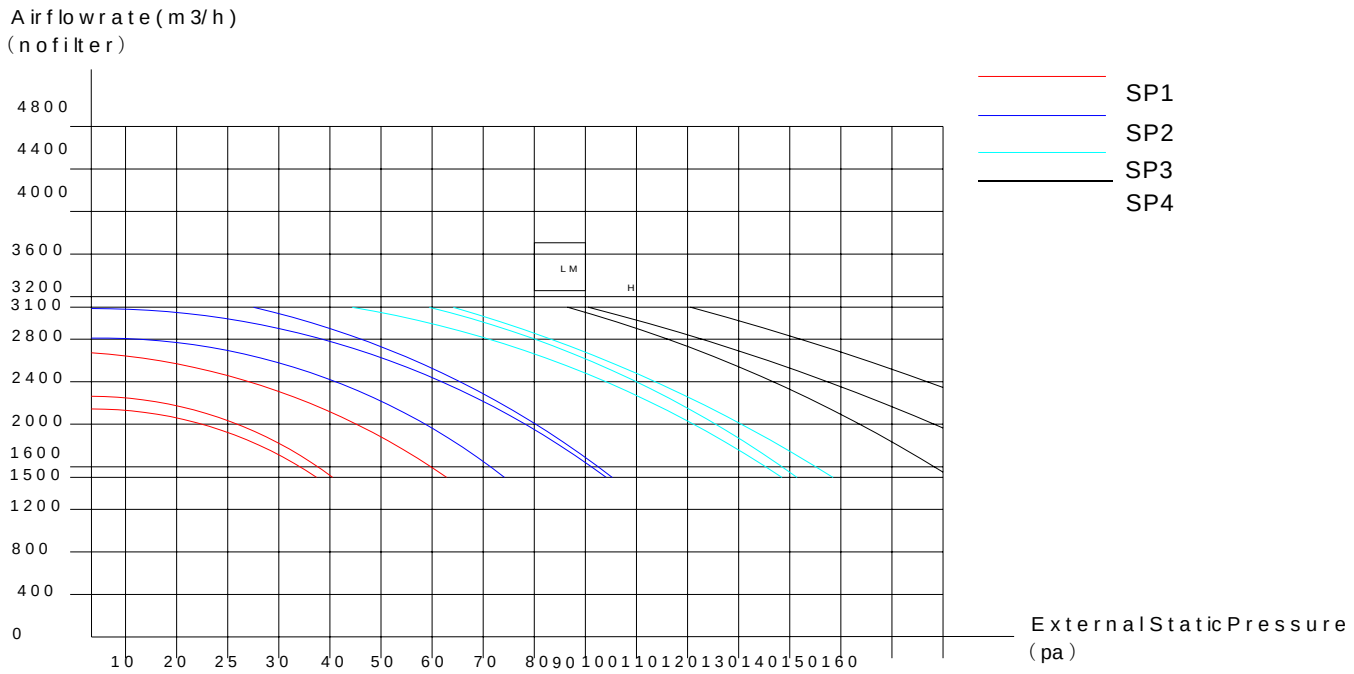
Airflowrate(m3/h)
(nofilter)
4800
4400
4000
3600
3200
3100
2800
2400
2000
1600
1500
1200
800
400
0
L M
H
10 20 25 30 40 50 60 70 80 90 100 110 120 130 140 150 160
External Static Pressure
(pa)
SP1
SP2
SP3
SP4

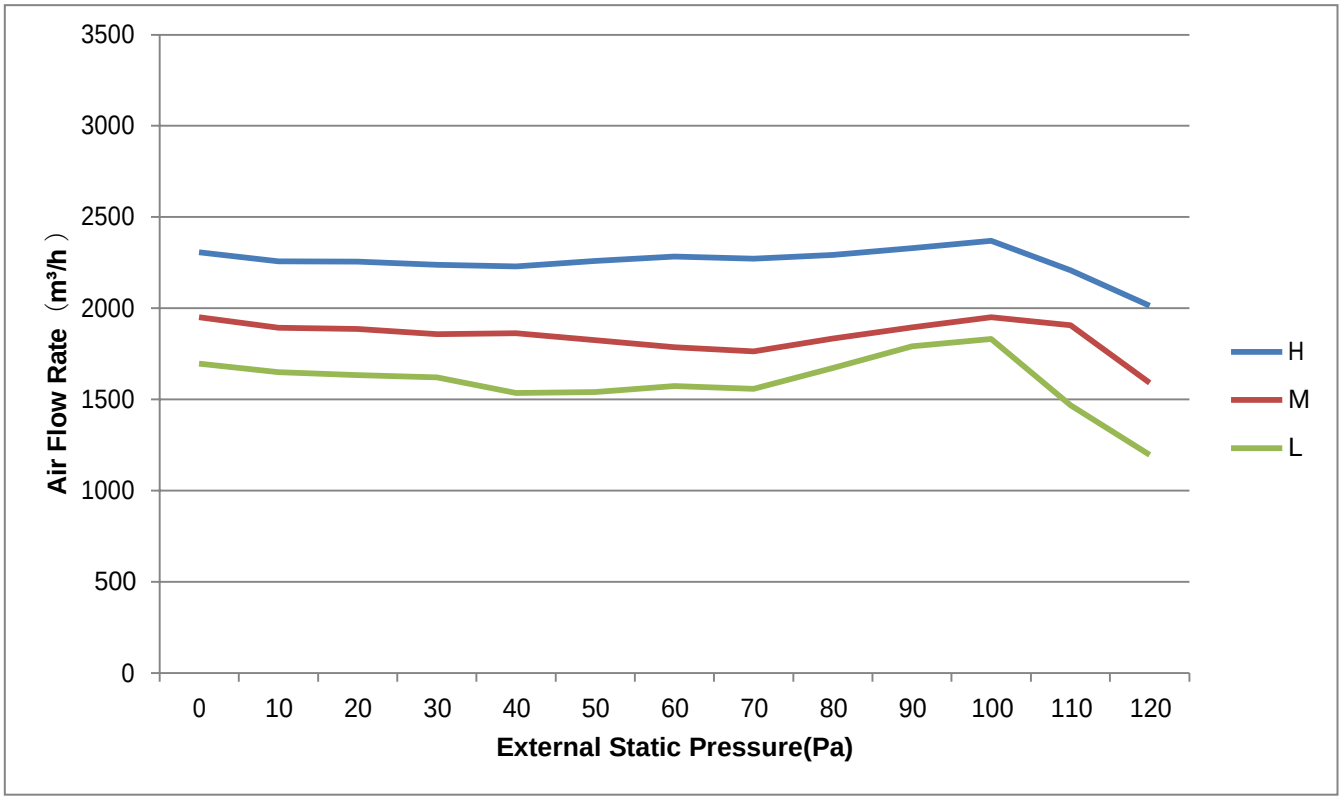
3500
3000
2500
2000
1500
1000
500
0
Air Flow Rate (m³/h)
0 10 20 30 40 50 60 70 80 90 100 110 120
External Static Pressure(Pa)
H
M
L

55k

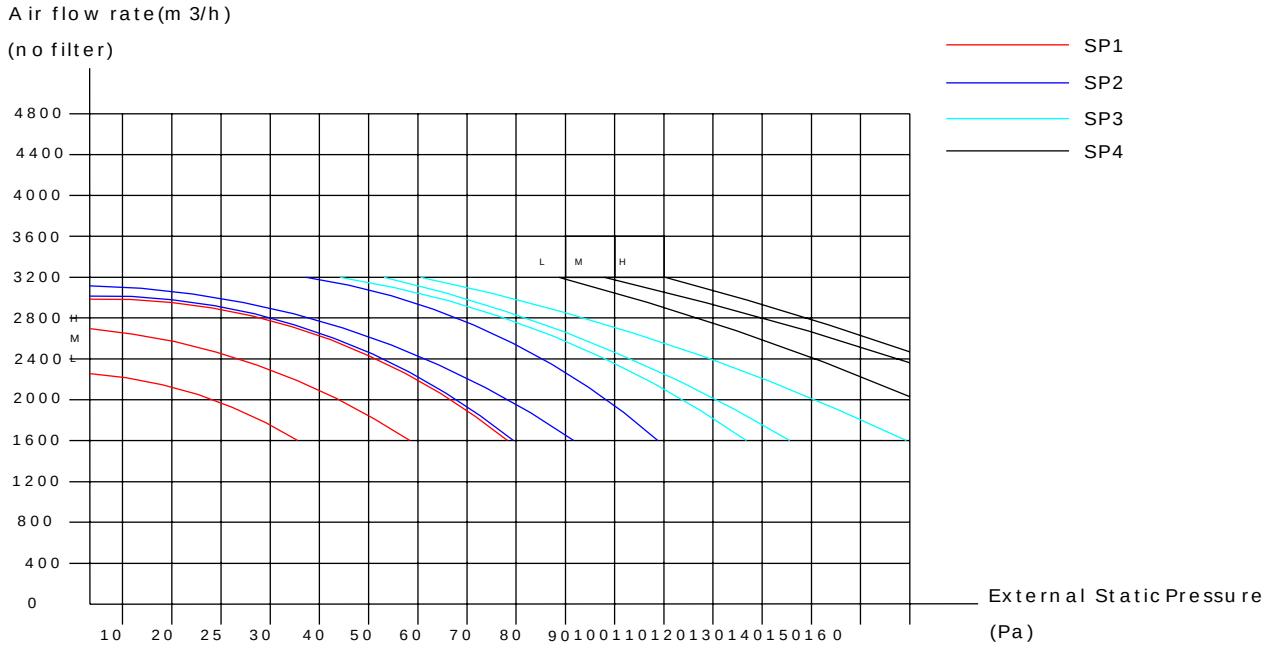
Air flow rate(m 3/h)
(no filter)
SP1
SP2
SP3
SP4
4800
4400
4000
3600
3200
2800
2400
2000
1600
1200
800
400
0
H
M
L
10 20 25 30 40 50 60 70 80 90100110120130140150160
External Static Pressure
(Pa)

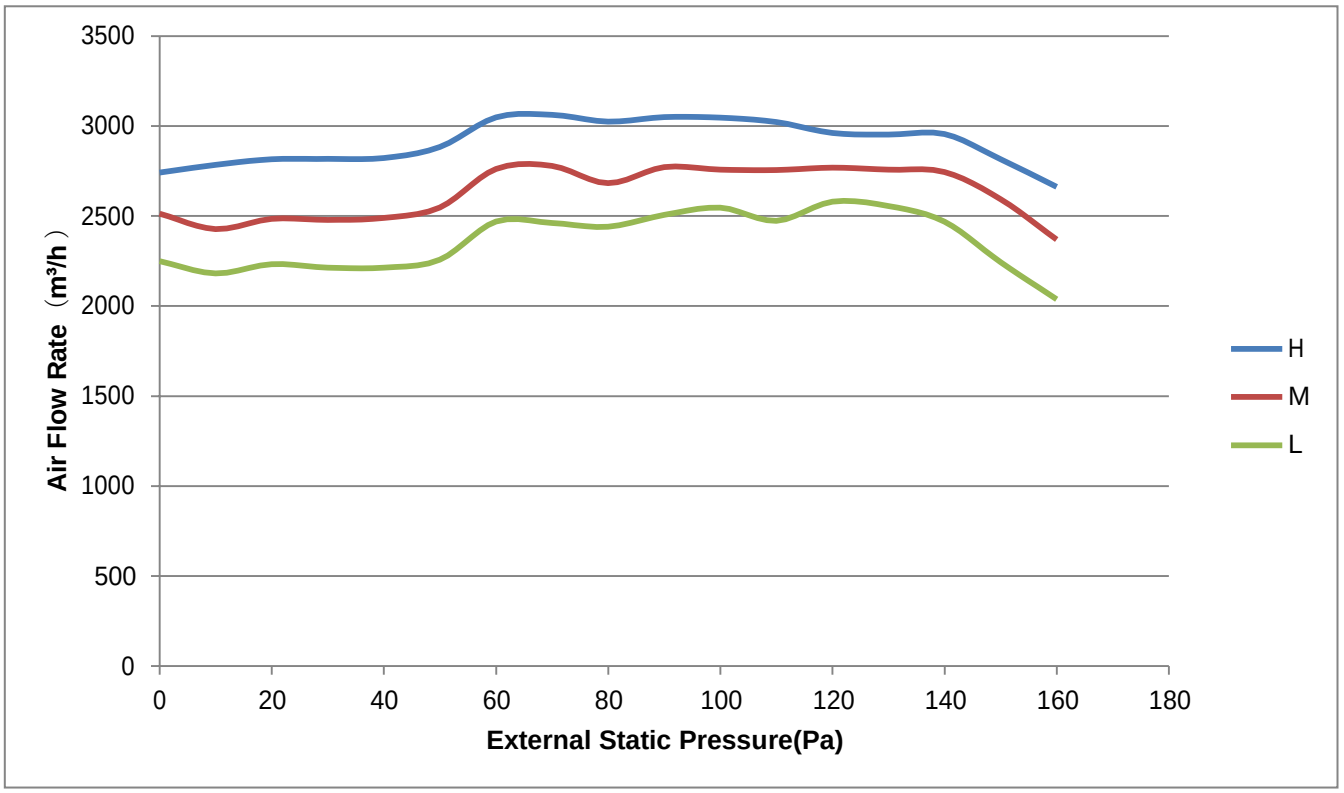
3500
3000
2500
2000
1500
1000
500
0
Air Flow Rate（m³/h）
0 20 40 60 80 100 120 140 160 180
External Static Pressure(Pa)
H
M
L

6. Electric Characteristics

Model	Indoor Unit				Power Supply
	Hz	Voltage	Min.	Max.	MFA
KTI-18HWF32	50	220-240V	198V	254V	/
KTI-24HWF32	50	220-240V	198V	254V	/
KTI-36HWF32	50	220-240V	198V	254V	/
KTI-48HWF32	50	220-240V	198V	254V	/
KTI-55HWF32	50	220-240V	198V	254V	/

Note:
MFA: Max. Fuse Amps. (A)

7. Sound Levels

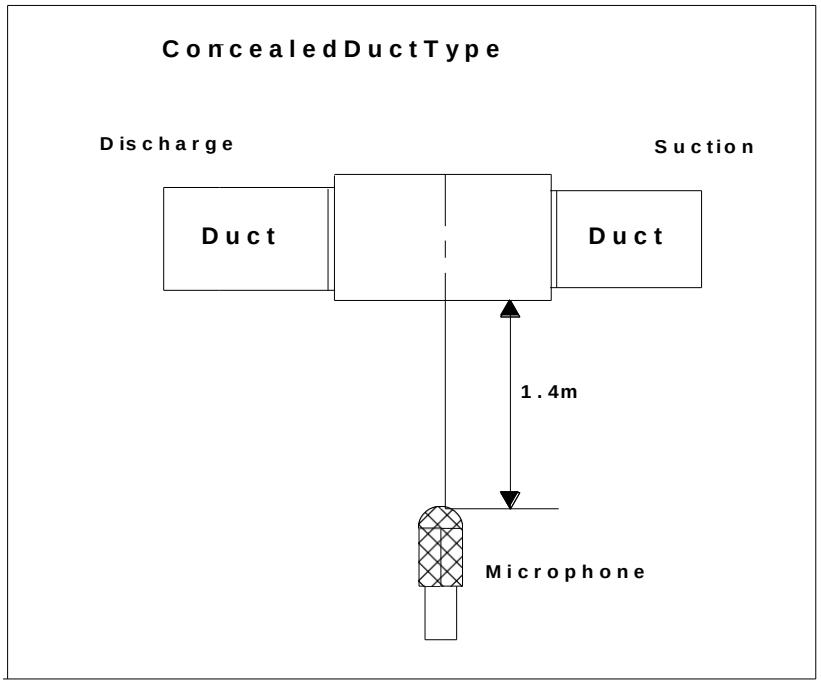

Model	Sound Power dB(A)	Noise level dB(A)		
		H	M	L
KTI-18HWF32	60	44	42	40
KTI-24HWF32	62	44	42	40
KTI-36HWF32	62	47	43	40
KTI-48HWF32	67	51	50	48
KTI-55HWF32	71	54	52	50

8. Accessories

	Name	Shape	Quantity
Tubing & Fittings	Soundproof / insulation sheath		2
Drainpipe Fittings (for cooling & heating)	Drain joint		1
	Seal ring		1
EMC & It's Fitting (for some models)	Magnetic ring (twist the electric wires L and N around the magnetic ring to five circles)	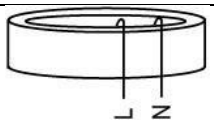	1
Wired controller & Its Frame	Wired controller		1
	Owner' s manual of wired controller	—	1
	Wired controller installation manual	—	1
Others	Owner' s manual	—	1
	Installation manual	—	1
	Connecting wire for display (2m)	—	1(on some models)
	Cord protection rubber ring		1(on some models)

9. The Specification of Power

Model(kBtu/h)		18~24
POWER	Phase	1-phase
	Frequency and Voltage	220-240V, 50Hz
	POWER WIRING (mm^2)	3×2.5(3×4.0 with auxiliary electric heater)
CIRCUIT BREAKER/Fuse (A)		25/20
Indoor/Outdoor Connecting Wiring (Weak Electric Signal) (mm^2)		2×0.2
Indoor/Outdoor Connecting Wiring (Strong Electric Signal) (mm^2)		3×1.0(3×2.5 with auxiliary electric heater)

Model(kBtu/h)		36	48~55
POWER	Phase	3-phase	3-phase
	Frequency and Voltage	380-415V, 50Hz	380-415V, 50Hz
	POWER WIRING (mm^2)	5×2.5(5×4.0 with auxiliary electric heater)	5×2.5(5×4.0 with auxiliary electric heater)
CIRCUIT BREAKER/Fuse (A)		32/25	40/30
Indoor/Outdoor Connecting Wiring (Weak Electric Signal) (mm^2)		2×0.2	2×0.2
Indoor/Outdoor Connecting Wiring (Strong Electric Signal) (mm^2)		3×1.0(3×2.5 with auxiliary electric heater)	3×1.0(3×2.5 with auxiliary electric heater)

10. Field Wiring

18k~55k

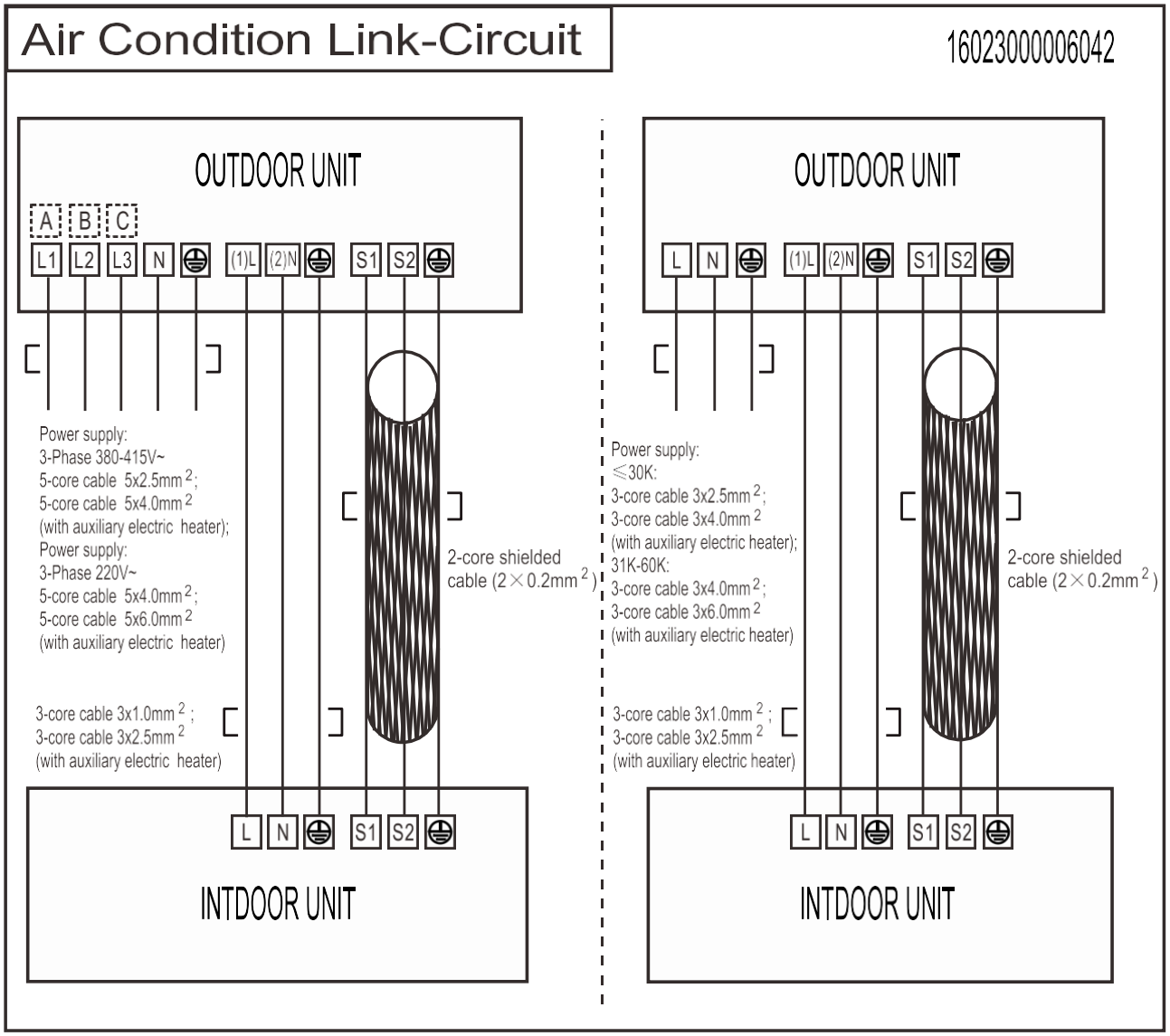

Ceiling & Floor Type

1. Features.....51

2. Dimensions.....52

3. Service Space.....53

4. Wiring Diagrams.....54

5. Electric Characteristics 60

6. Sound Levels.....60

7. Air Velocity and Temperature Distributions (Reference Data).....61

8. Accessories 67

9. The Specification of Power.....67

10. Field Wiring 68

1. Features

1.1. New design, more modern and elegant appearance.

1.2. Convenient installation

--The ceiling type can be easily installed into a corner of the ceiling even if the ceiling is very narrow
--It is especially useful when installation of an air conditioner in the center of the ceiling is impossible due to a structure such as one lighting.

1.3. Two direction auto swing (vertical & horizontal) and wide angle air flow,

--Air flow directional control minimizes the air resistance and produces wilder air flow to vertical direction.
--The range of horizontal air discharge is widened which secures wider air flow distribution to provide more comfortable air circulation no matter where the unit is set up

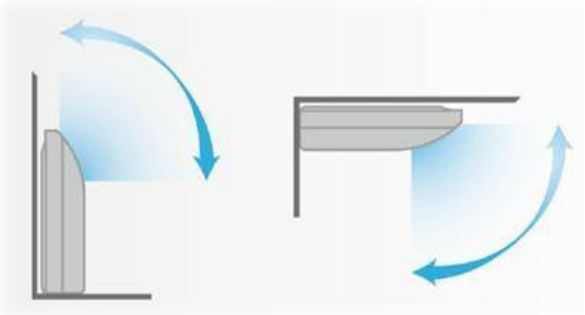

1.4. Three level fan speed, more humanism design, meets different air-supply requirement.

1.5. New foam drain pan with plastic-spraying inner surface

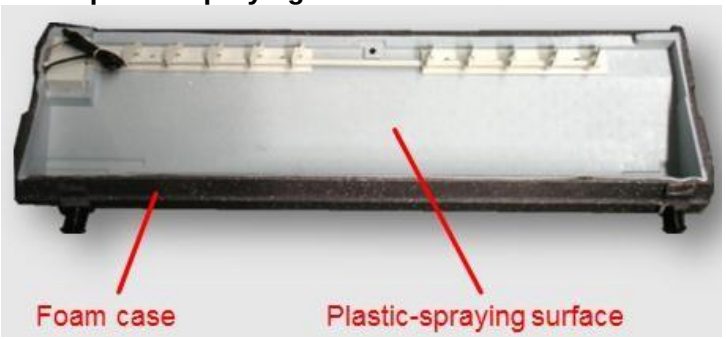

1.6. Easy operation.

1.7. Remote control and optional wired control method.

2. Dimensions

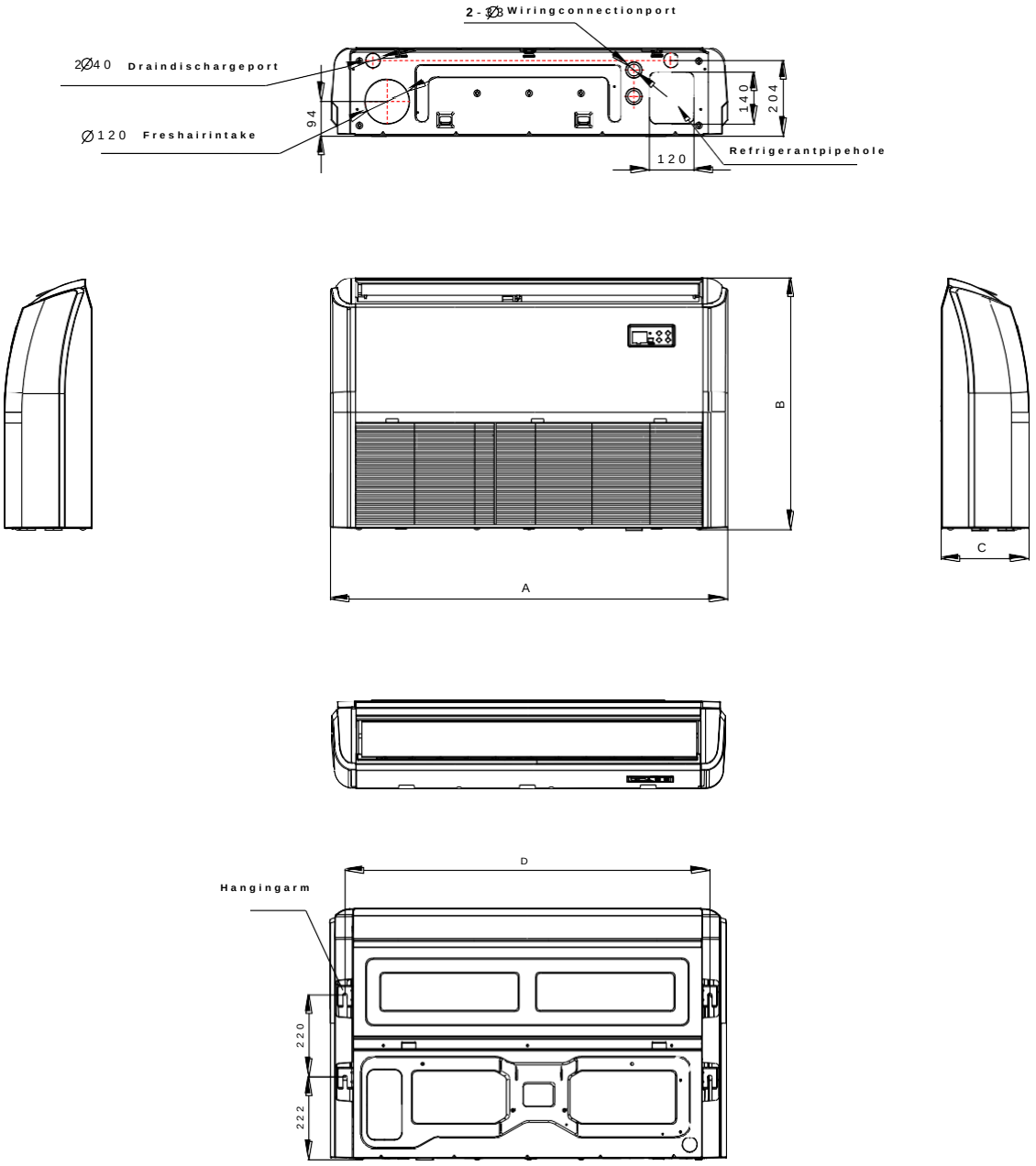

Capacity (KBtu/h)	A	B	C	D
18/24	1068	675	235	983
36/48/55	1650	675	235	1565

3. Service Space

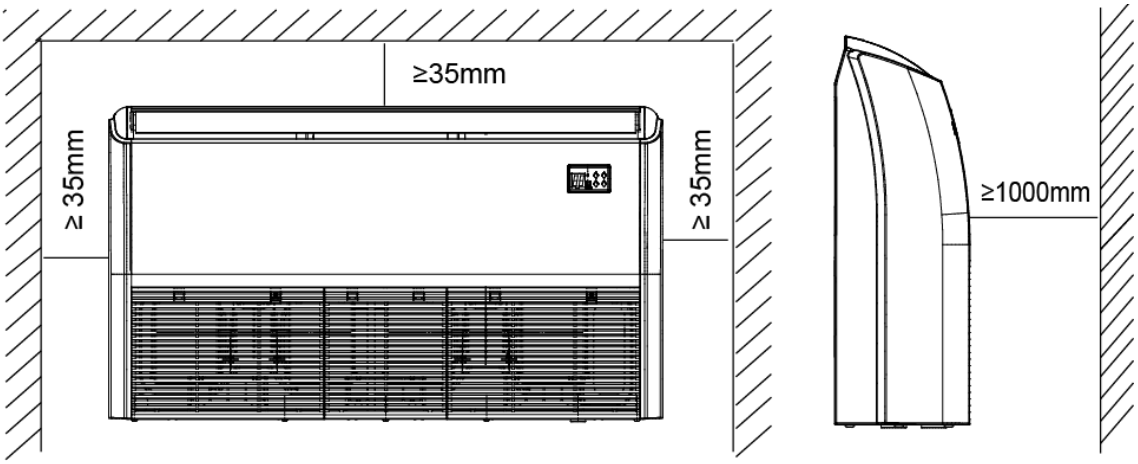

4. Wiring Diagrams

KUE-18HRF32, KUE-24HRF32

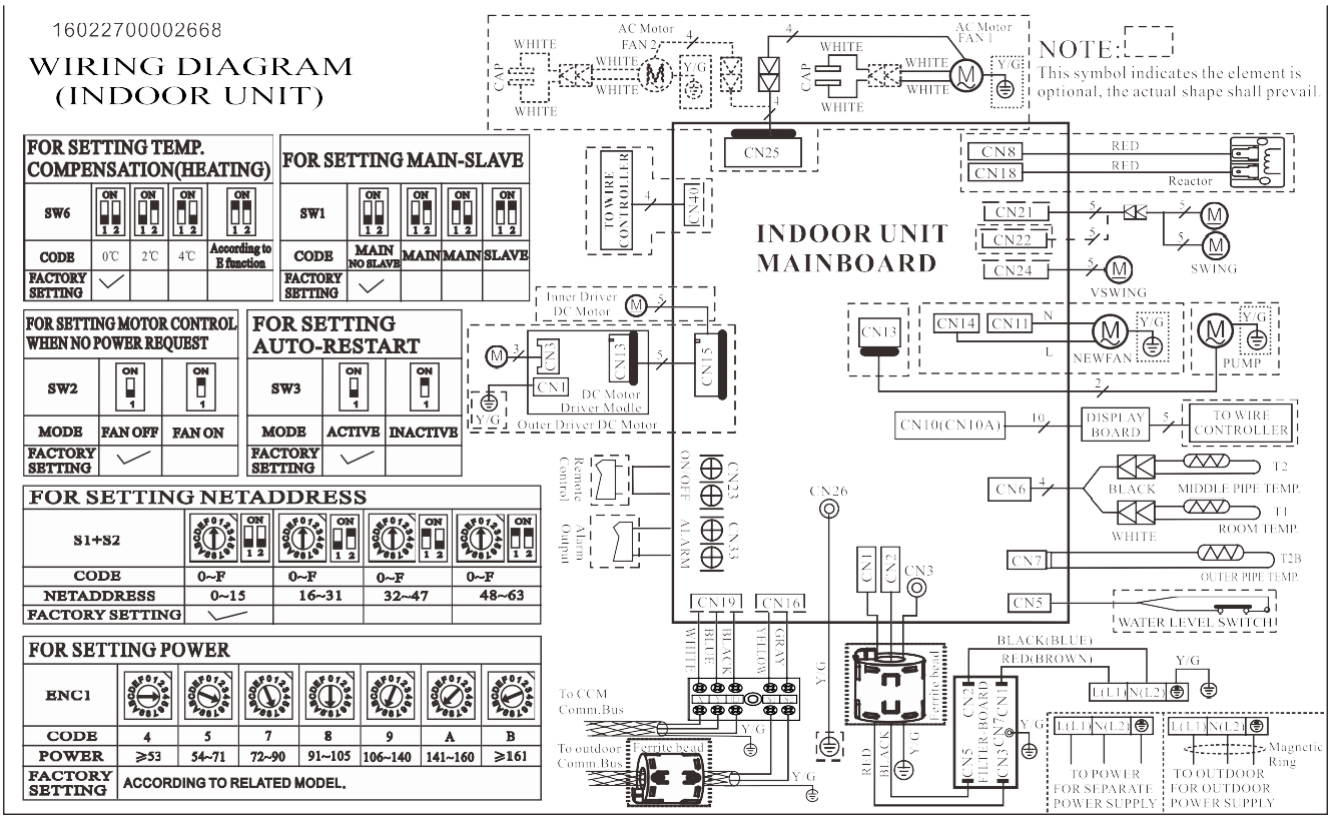

KUE-36HRF32, KUE-48HRF32, KUE-55H

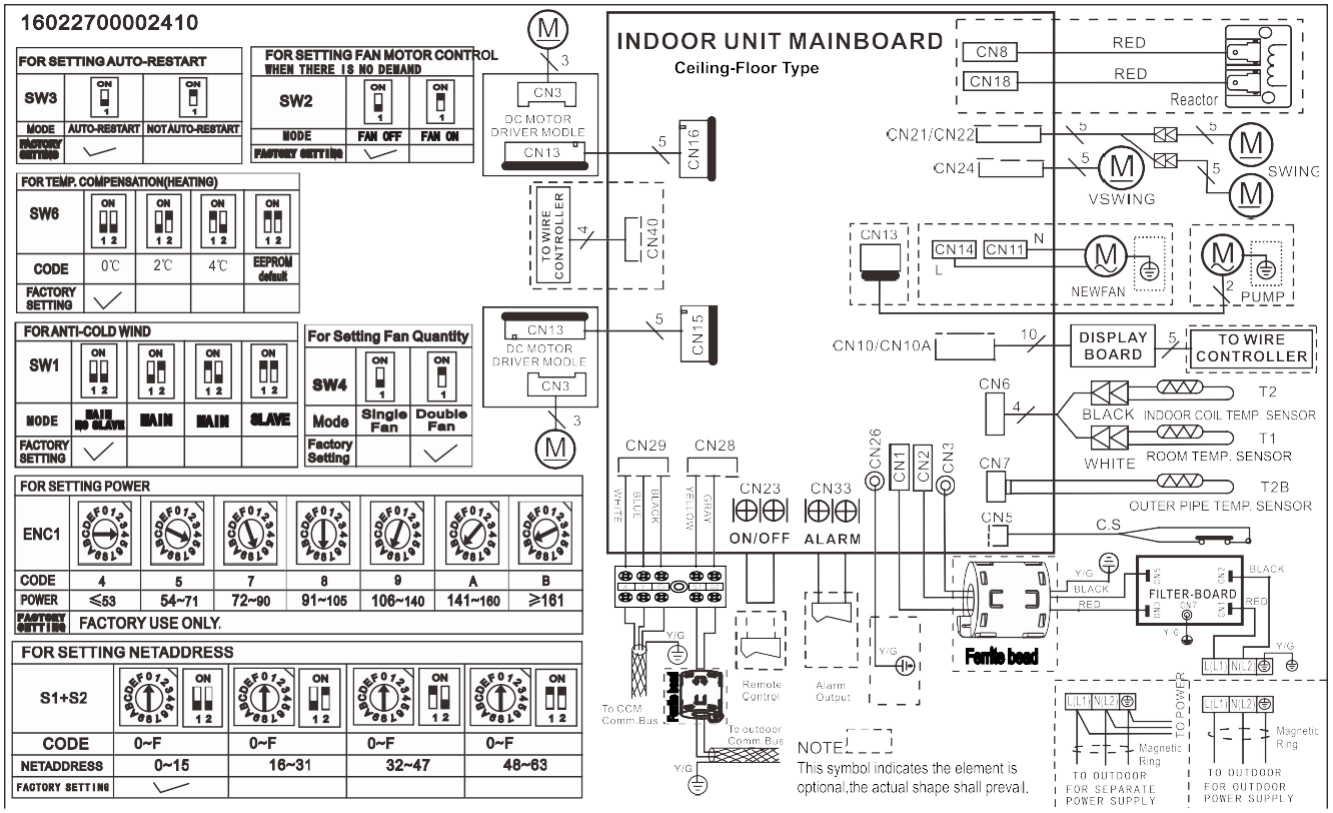

4.1 Some connectors introduce:

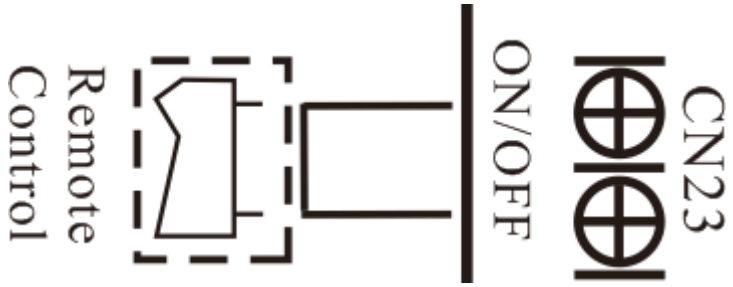

A For remote control (ON-OFF) terminal port CN23

1. Remove the short connector in CN23 when you use ON-OFF function;
2. When remote switch off (OPEN), the unit would be off;
3. When remote switch on (CLOSE), the unit would be on;
4. When close/open the remote switch, the unit would be responded the demand within 2 seconds;
5. When the remote switch on. You can use remote controller/wire controller to select the mode what you want; when the remote switch off, the unit would not respond the demand from remote controller/wire controller.

When the remote switch off, but the remote controller/wire controller are on, CP code would be shown on the display board.

6. The voltage of the port is 12V DC, design Max. current is 5mA.

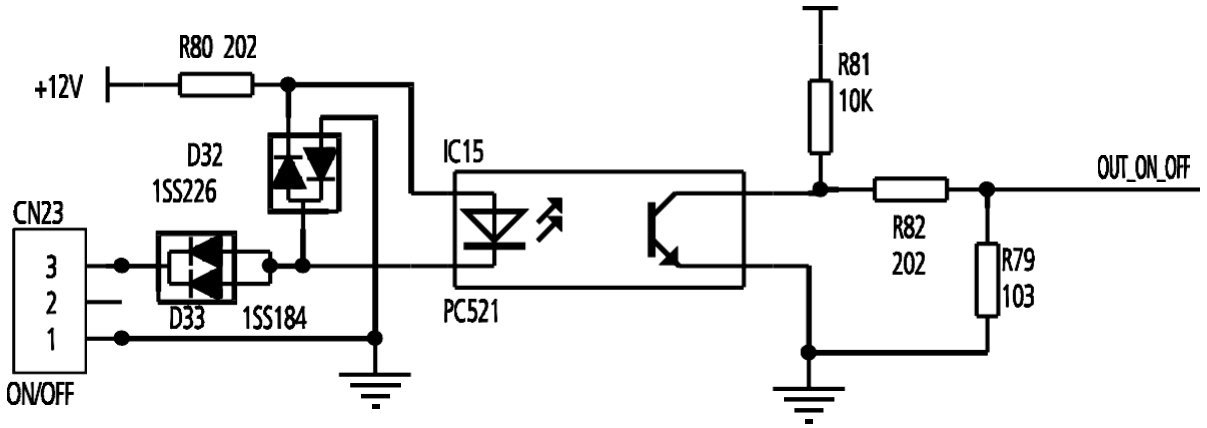

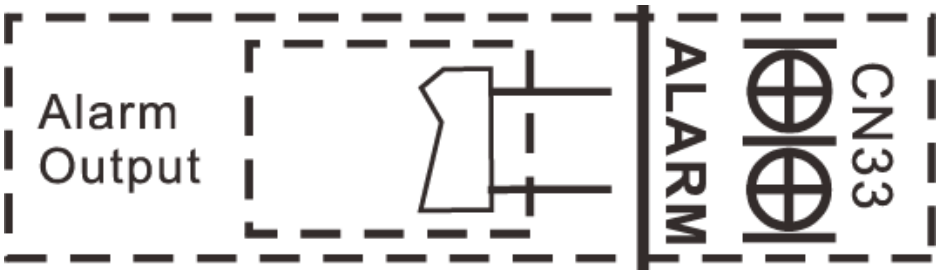

B For ALARM terminal port CN33

1. Provide the terminal port to connect ALARM, but no voltage of the terminal port , the power from the ALARM system (not from the unit)

2. Although design voltage can support higher voltage, but we strongly ask you connect the power less than 24V, current less than 0.5A

3. When the unit occurs the problem, the relay would be closed, then ALARM works

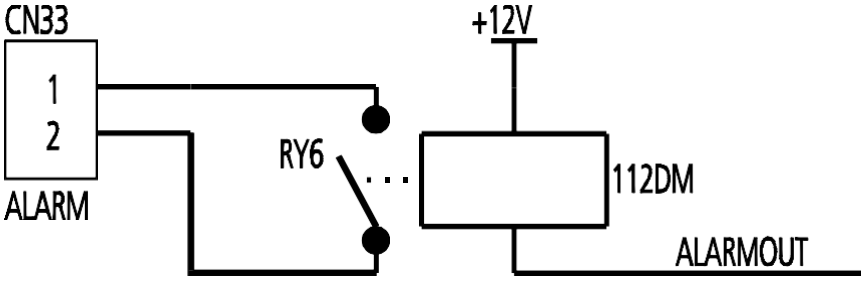

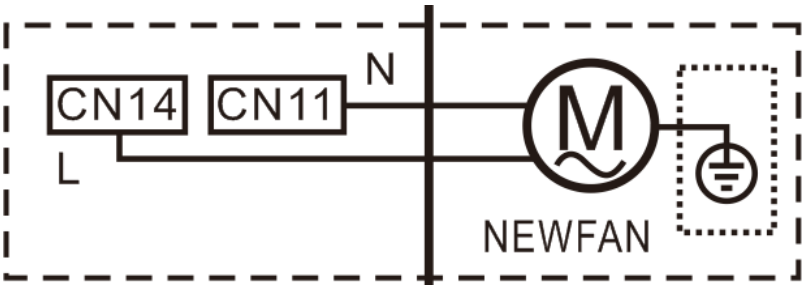

C. For new fresh motor terminal port CN14&CN14

1. Connect the fan motor to the port, no need care L/N of the motor;

2. The output voltage is the power supply;

3. The fresh motor cannot excess 200W or 1A, follow the smaller one;

4. The new fresh motor will be worked when the indoor fan motor work ;when the indoor fan motor stops, the new fresh motor would be stopped;

5. When the unit enter force cooling mode or capacity testing mode, the fresh motor isn’twork.

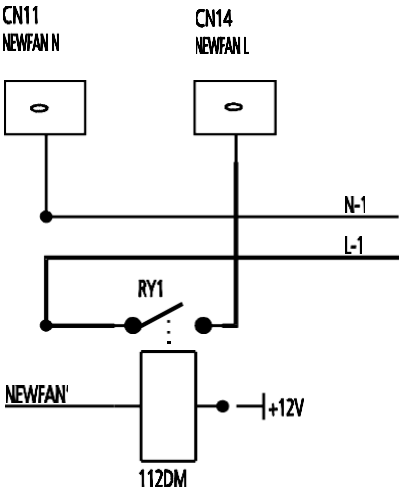

4.2 Micro-Switch Introduce:

FOR SETTING MAIN-SLAVE				
SW1	ON 1 2	ON 1 2	ON 1 2	ON 1 2
CODE	MAIN NO SLAVE	MAIN	MAIN	SLAVE
FACTORY SETTING	✓			

A. Micro-switch SW1 is for setting the master or slave unit when the unit is in twin connection.
Range: Master no slave (Normal 1 drive 1 connection), Master (2 positions without difference), Slave

FOR SETTING FAN MOTOR CONTROL WHEN THERE IS NO DEMAND		
SW2	ON 1	ON 1
MODE	FAN OFF	FAN ON
FACTORY SETTING	✓	

B. Micro-switch SW2 is for selection of indoor FAN ACTION if room temperature reaches the setpoint and the compressor stops.
Range: OFF (in 127s), Keep running.

FOR SETTING AUTO-RESTART		
SW3	ON	ON
MODE	AUTO-RESTART	NOT AUTO-RESTART
FACTORY SETTING		

C. Micro-switch SW3 is for selection of auto-restart function.
Range: Active, inactive

For Setting Fan Quantity		
SW4	ON 1	ON 1
Mode	Single Fan	Double Fan
Factory Setting		✓

D. Micro-switch SW4 is for selection of quantity of fan motors. Same as size selection switch, this switch is for making the PCB suitable for all series units. DO NOT change it at random unless you want to use the PCB as a spare part
Range: Single Fan, Double Fan

FOR SETTING TEMP. COMPENSATION(HEATING)				
SW6	ON 1 2	ON 1 2	ON 1 2	ON 1 2
CODE	0℃	2℃	4℃	According to E function
FACTORY SETTING	✓			

E.Micro-switch SW6 is for selection of temperature compensation in heating mode. This helps to reduce the real temperature difference between ceiling and floor so that the unit could run properly. If the unit is on-floor installed, 0 should be chosen.

Range: **0ºC, 2ºC, 4ºC**, E function (reserved for special customizing)

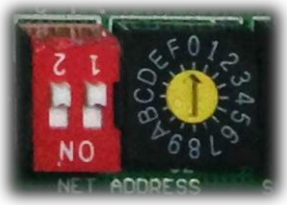

FOR SETTING NETADDRESS				
S1+S2	ON 1 2	ON 1 2	ON 1 2	ON 1 2
CODE	0~F	0~F	0~F	0~F
NETADDRESS	0~15	16~31	32~47	48~63
FACTORY SETTING	✓			

F. Micro-switch S1 and dial-switch S2 are for address setting when you want to control this unit by a central controller.

Range: 00-63

FOR SETTING POWER(FACTORY USE ONLY)							
ENC1							
CODE	4	5	7	8	9	A	B
POWER	≤53	54~71	72~90	91~105	106~140	141~160	≥161
FACTORY SETTING	ACCORDING TO RELATED MODEL.						

G. Dial-switch ENC1: The indoor PCB is universal designed for whole series units from 18K to 55K. This ENC1 setting will tell the main program what size the unit is.

NOTE: Usually there is glue on it because the switch position cannot be changed at random unless you want to use this PCB as a spare part to use in another unit. Then you have to select the right position to match the size of the unit.

“53” means 5.3kW (18K),“105” means 10.5kW(36K), and so on.

5. Electric Characteristics

Model	Indoor Units				Power Supply
	Hz	Voltage	Min.	Max.	MFA
KUE-18HRF32	50	220-240V	198V	254V	/
KUE-24HRF32	50	220-240V	198V	254V	/
KUE-36HRF32	50	220-240V	198V	254V	/
KUE-48HRF32	50	220-240V	198V	254V	/
KUE-55HRF32	50	220-240V	198V	254V	/

Note:
MFA: Max. Fuse Amps. (A)

6. Sound Levels

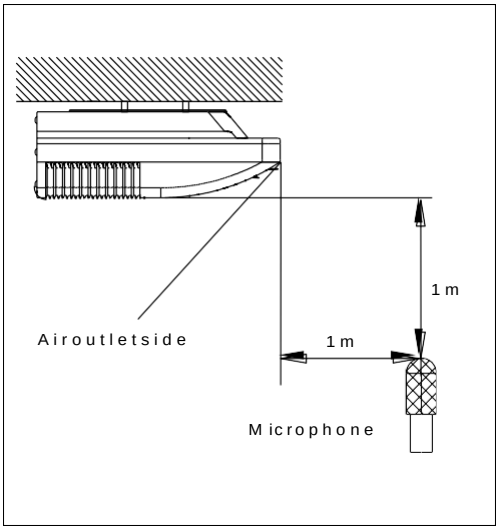

Ceiling

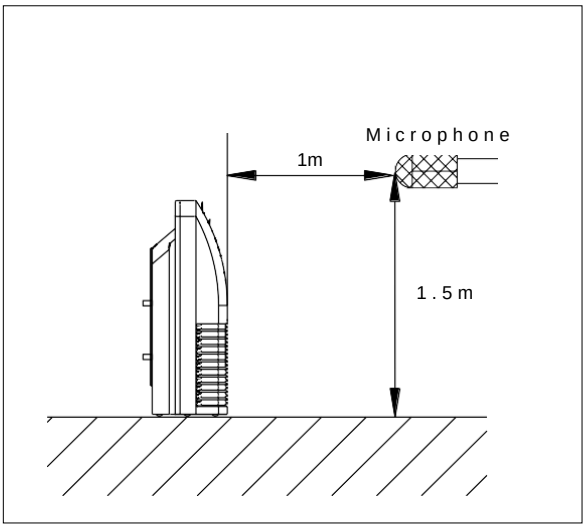

Floor

Model	Sound Power dB (A)	Noise level dB(A)		
		H	M	L
KUE-18HRF32	56	45	40	37
KUE-24HRF32	60	50	46	41
KUE-36HRF32	61	51	47	42
KUE-48HRF32	69	54	50	46
KUE-55HRF32	68	54	47	42

7. Air Velocity and Temperature Distributions (Reference Data)

Model: KUE-18HRF32, KUE-24HRF32
Ceiling installation:

Discharge angle 17°

Cooling airflow velocity distribution

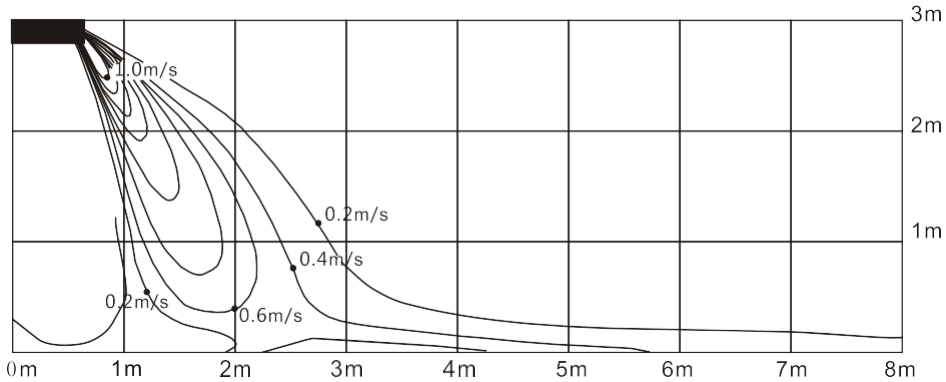

Cooling temperature distribution

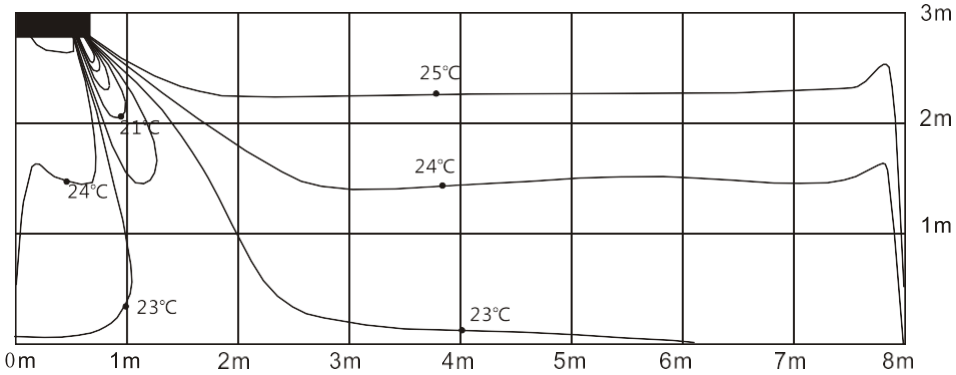

Discharge angle 50°

Heating airflow velocity distribution

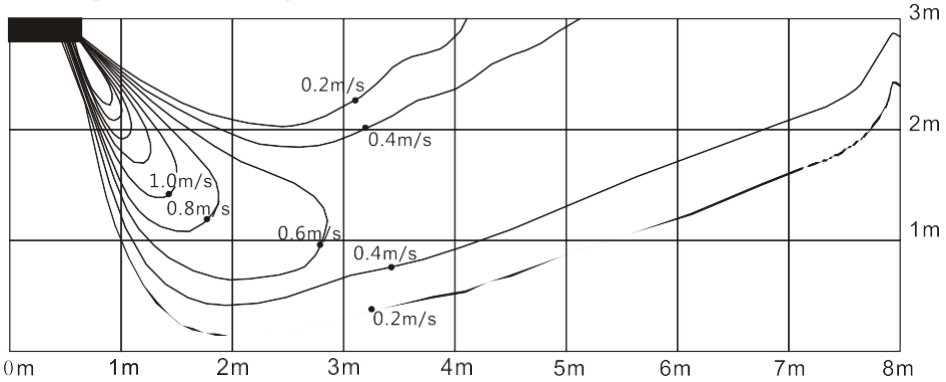

Heating temperature distribution

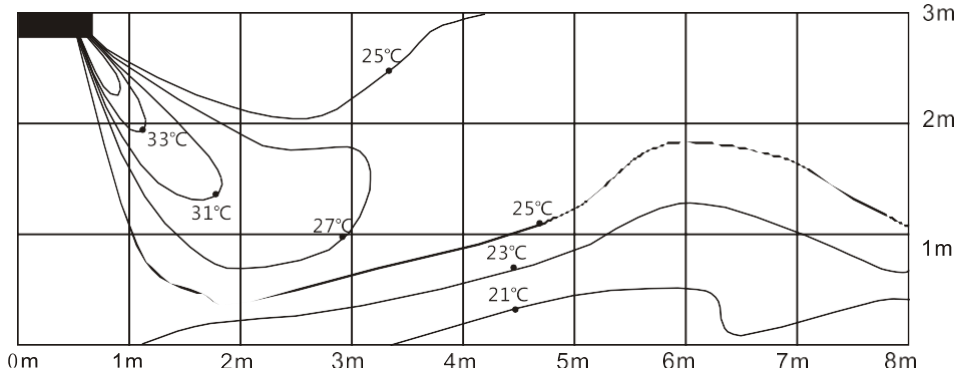

Floor installation:

Discharge angle 17°

Cooling airflow velocity distribution

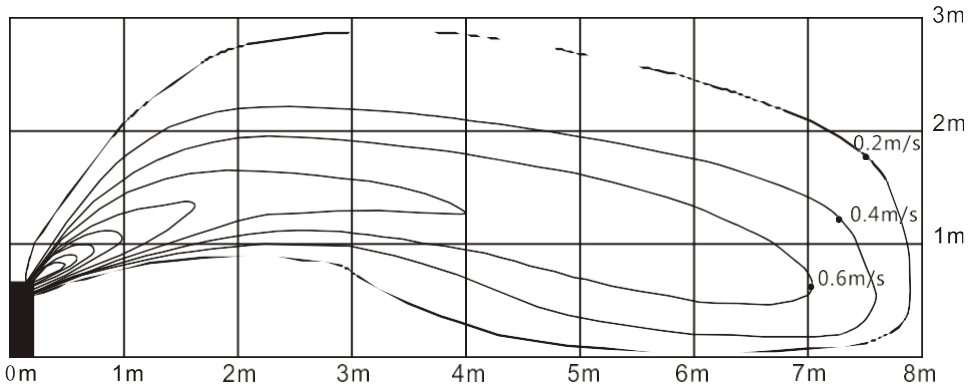

Cooling temperature distribution

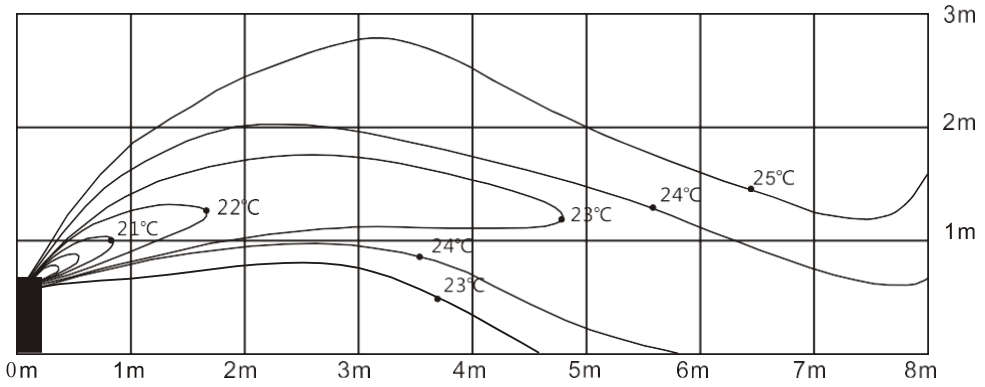

Discharge angle 50°

Heating airflow velocity distribution

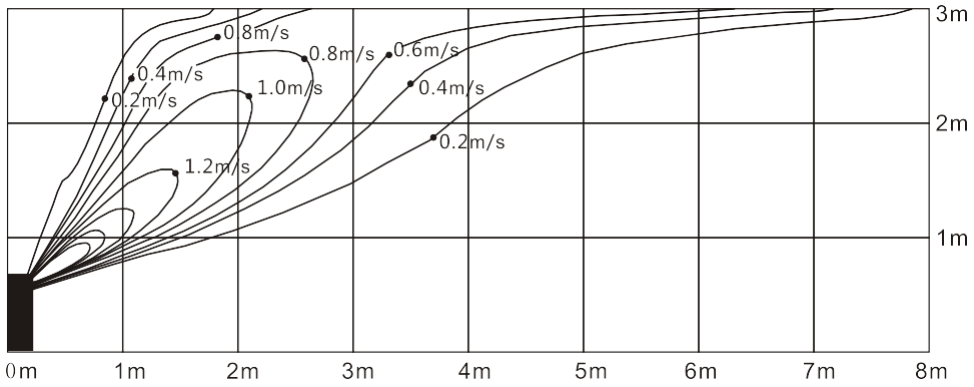

Heating temperature distribution

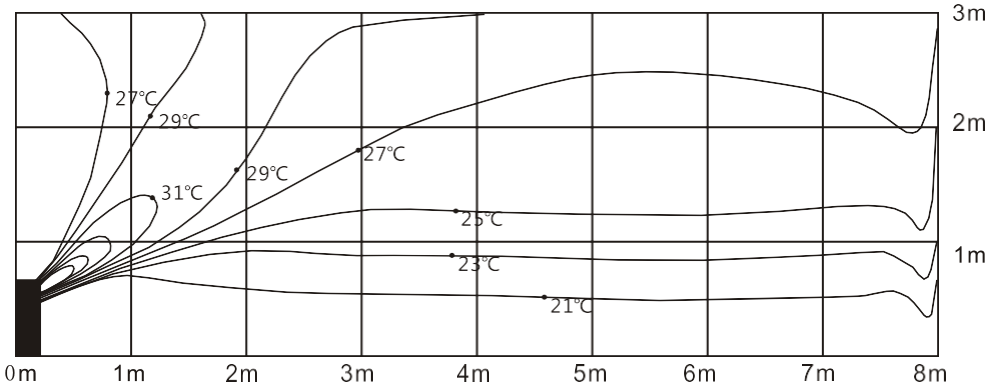

Model: KUE-36HRF32
Ceiling installation:
Discharge angle 17°

Cooling airflow velocity distribution

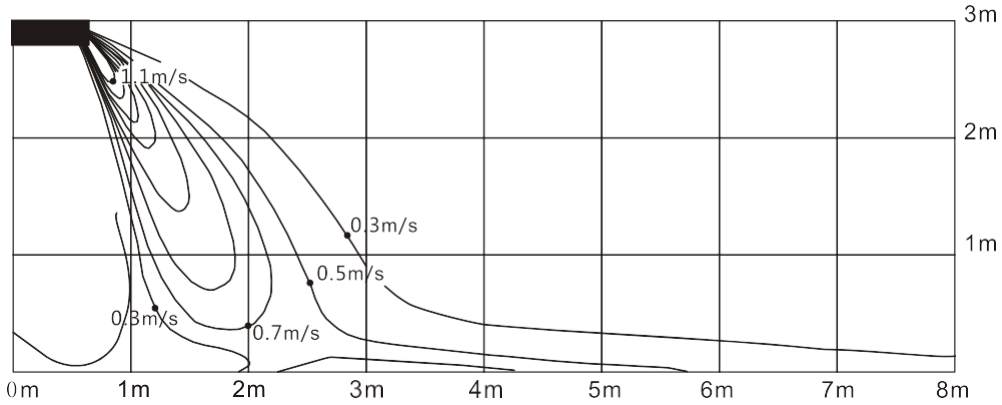

Cooling temperature distribution

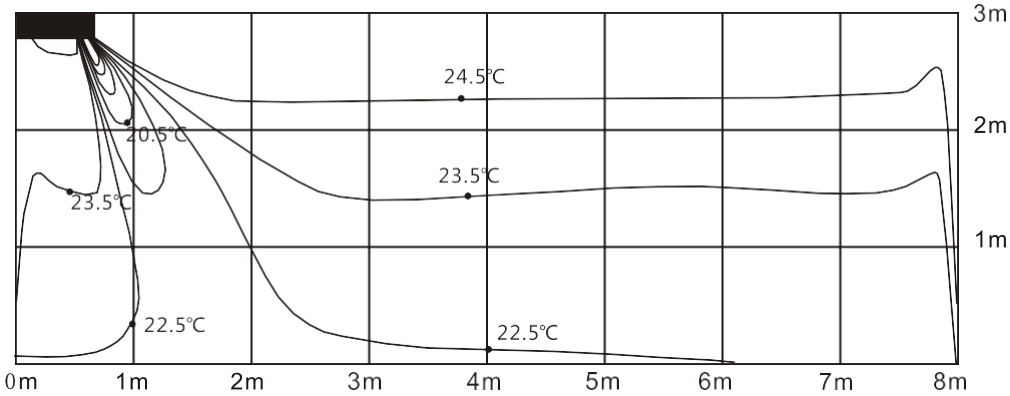

Discharge angle 50°

Heating airflow velocity distribution

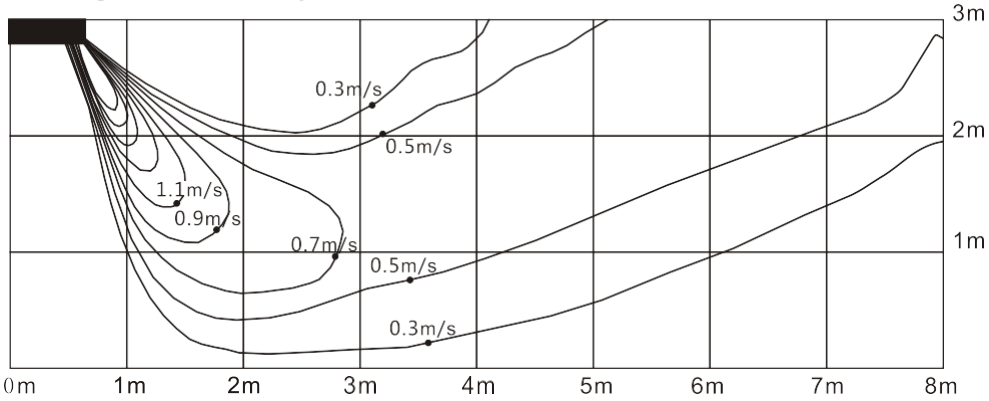

Heating temperature distribution

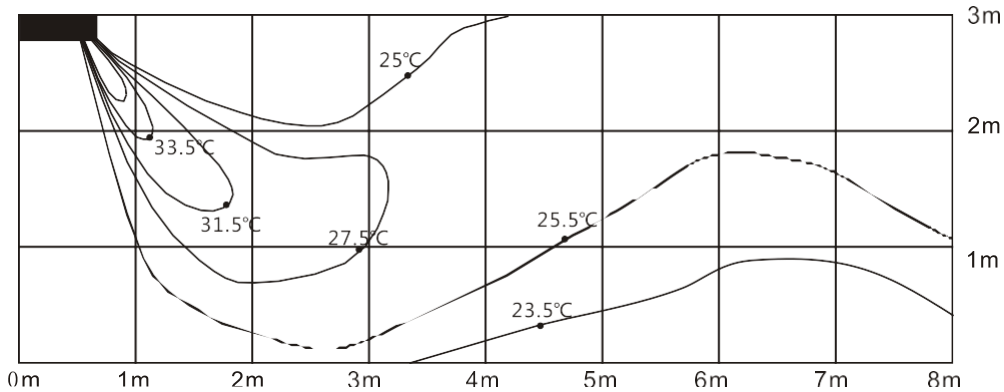

Floor installation:

Discharge angle 17°

Cooling airflow velocity distribution

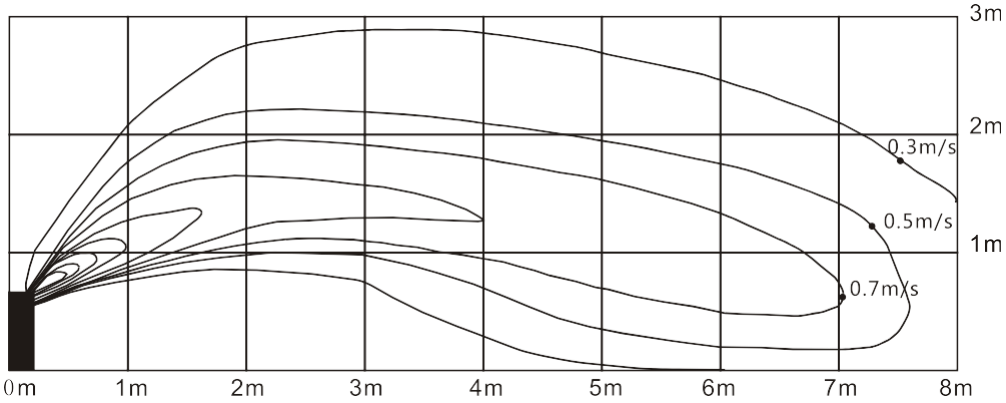

Cooling temperature distribution

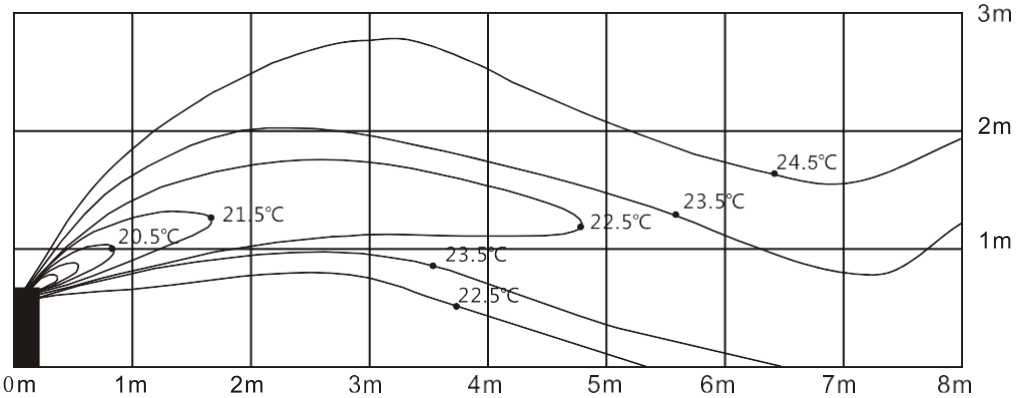

Discharge angle 50°

Heating airflow velocity distribution

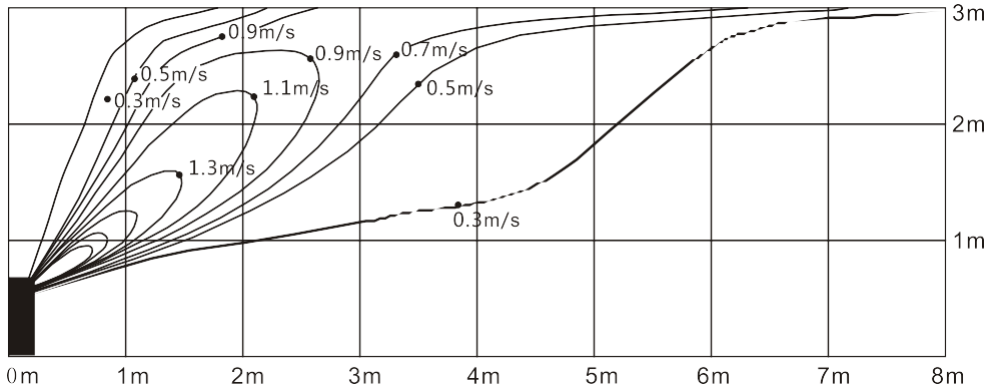

Heating temperature distribution

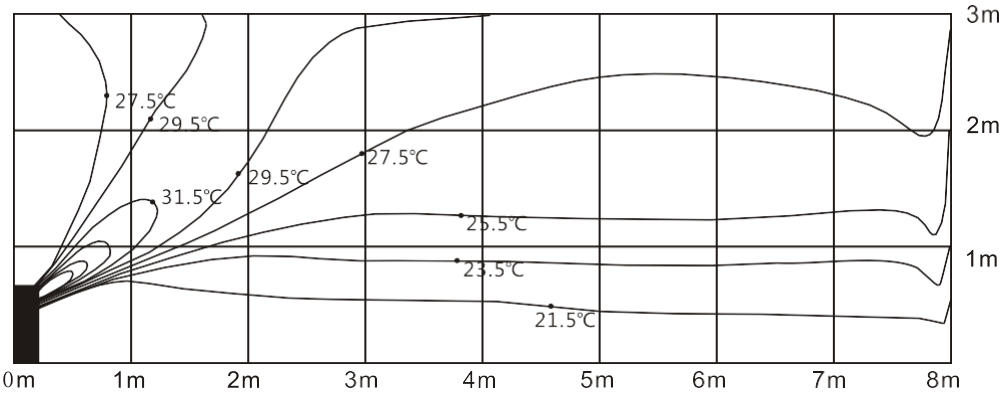

Model: KUE-48HRF32, KUE-55HRF32
Ceiling installation:
Discharge angle 17°

Cooling airflow velocity distribution

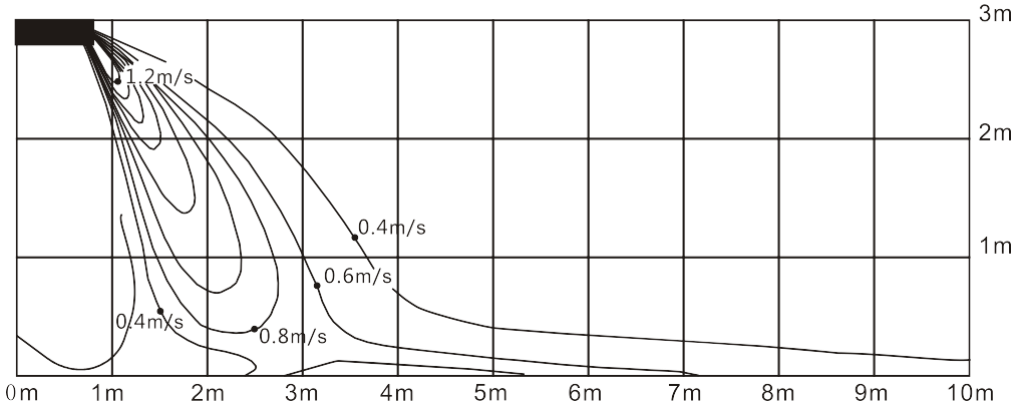

Cooling temperature distribution

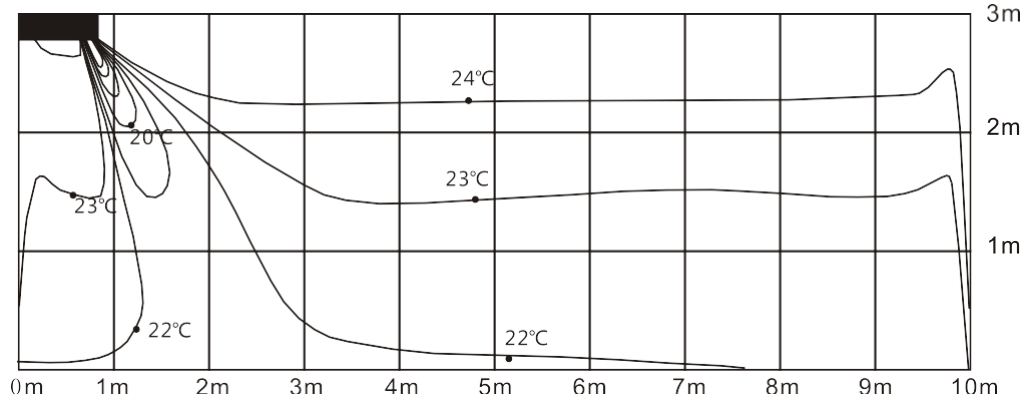

Discharge angle 50°

Heating airflow velocity distribution

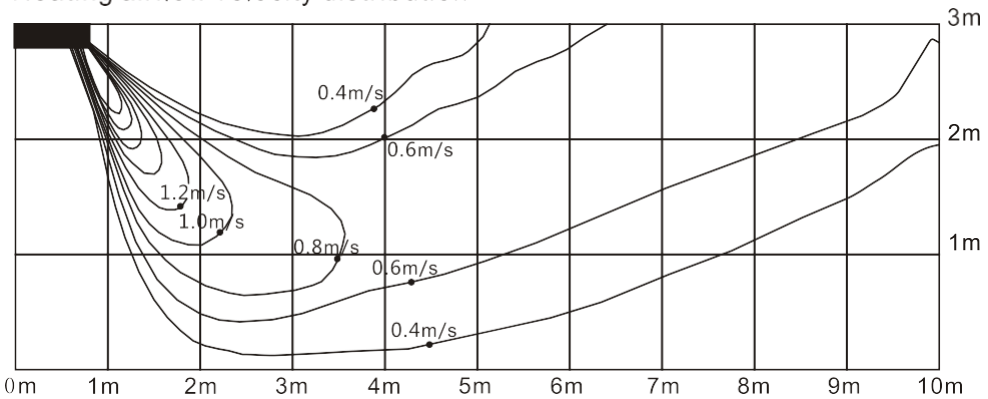

Heating temperature distribution

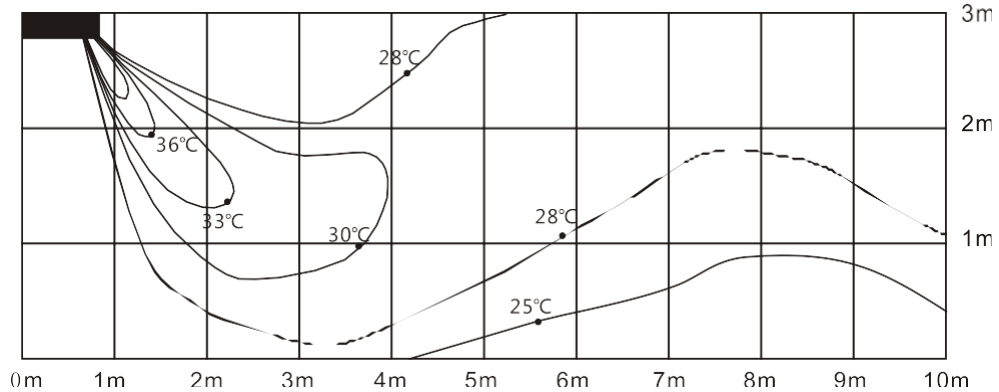

Floor installation:

Discharge angle 17°

Cooling airflow velocity distribution

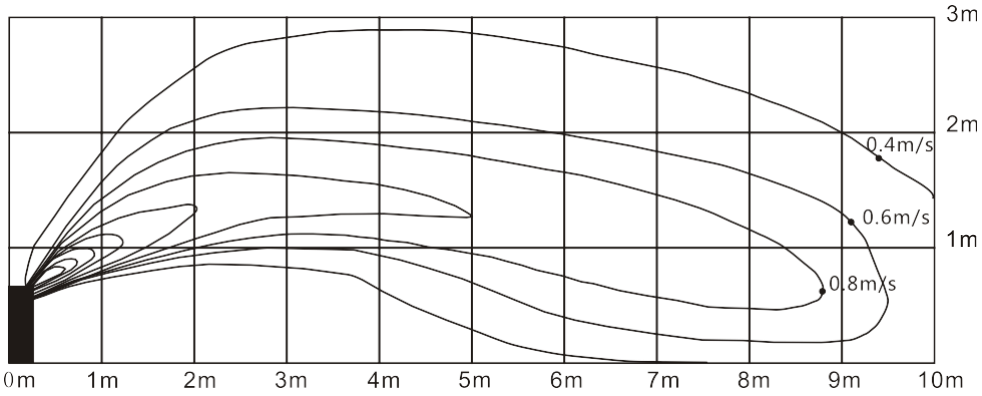

Cooling temperature distribution

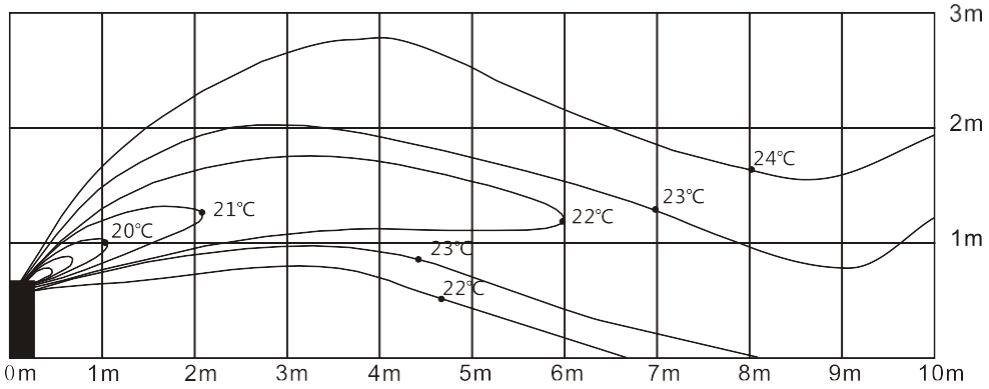

Discharge angle 50°

Heating airflow velocity distribution

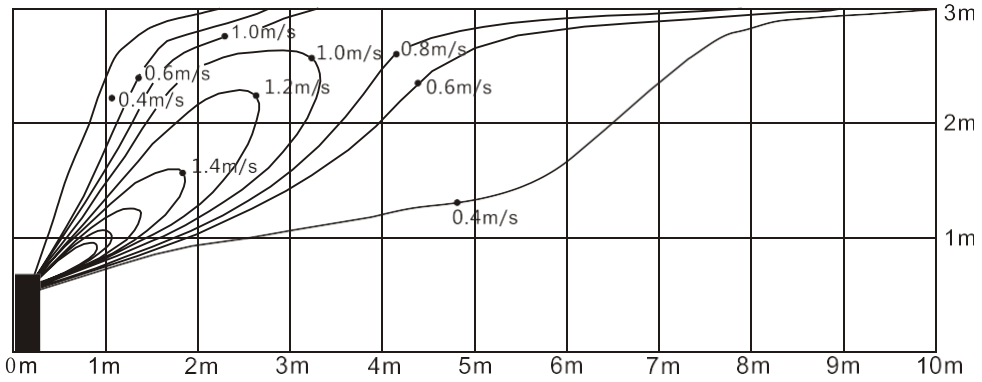

Heating temperature distribution

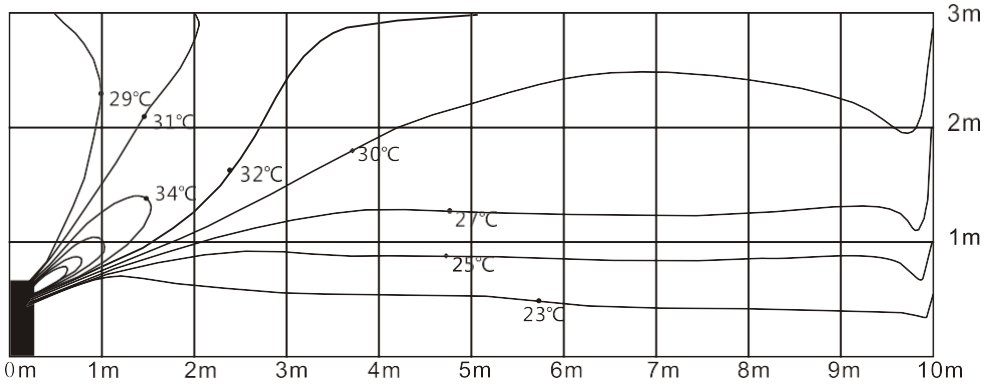

8. Accessories

	Name	Shape	Quantity
Remote controller & Its holder(The product you have might not be provided the following accessories)	1. Remote controller		1
	2. Remote controller holder		1
	3. Mounting screw (ST2.9×10-C-H)		2
	4. Alkaline dry batteries (AM4)		2
Others	5. Owner's manual	—	1
	6. Installation manual	—	1
	7. Remote controller manual	—	1

9. The Specification of Power

Model(kBtu/h)		18~24	36	48~55
POWER	Phase	1-phase	3-phase	3-phase
	Frequency and Voltage	220-240V, 50Hz	380-415V, 50Hz	380-415V, 50Hz
	POWER WIRING (mm2)	3×2.5(3×4.0 with auxiliary electric heater)	5×2.5(5×4.0 with auxiliary electric heater)	5×2.5(5×4.0 with auxiliary electric heater)
CIRCUIT BREAKER/Fuse (A)		30/20	30/20	30/25
Indoor/Outdoor Connecting Wiring (Weak Electric Signal) (mm^2)		2×0.2	2×0.2	2×0.2
Indoor/Outdoor Connecting Wiring (Strong Electric Signal) (mm^2)		3×1.0(3×2.5 with auxiliary electric heater)	3×1.0(3×2.5 with auxiliary electric heater)	3×1.0(3×2.5 with auxiliary electric heater)

10.Field Wiring

KUE-18HRF32, KUE-24HRF32, KUE-36HRF32, KUE-48HRF32, KUE-55HRF32

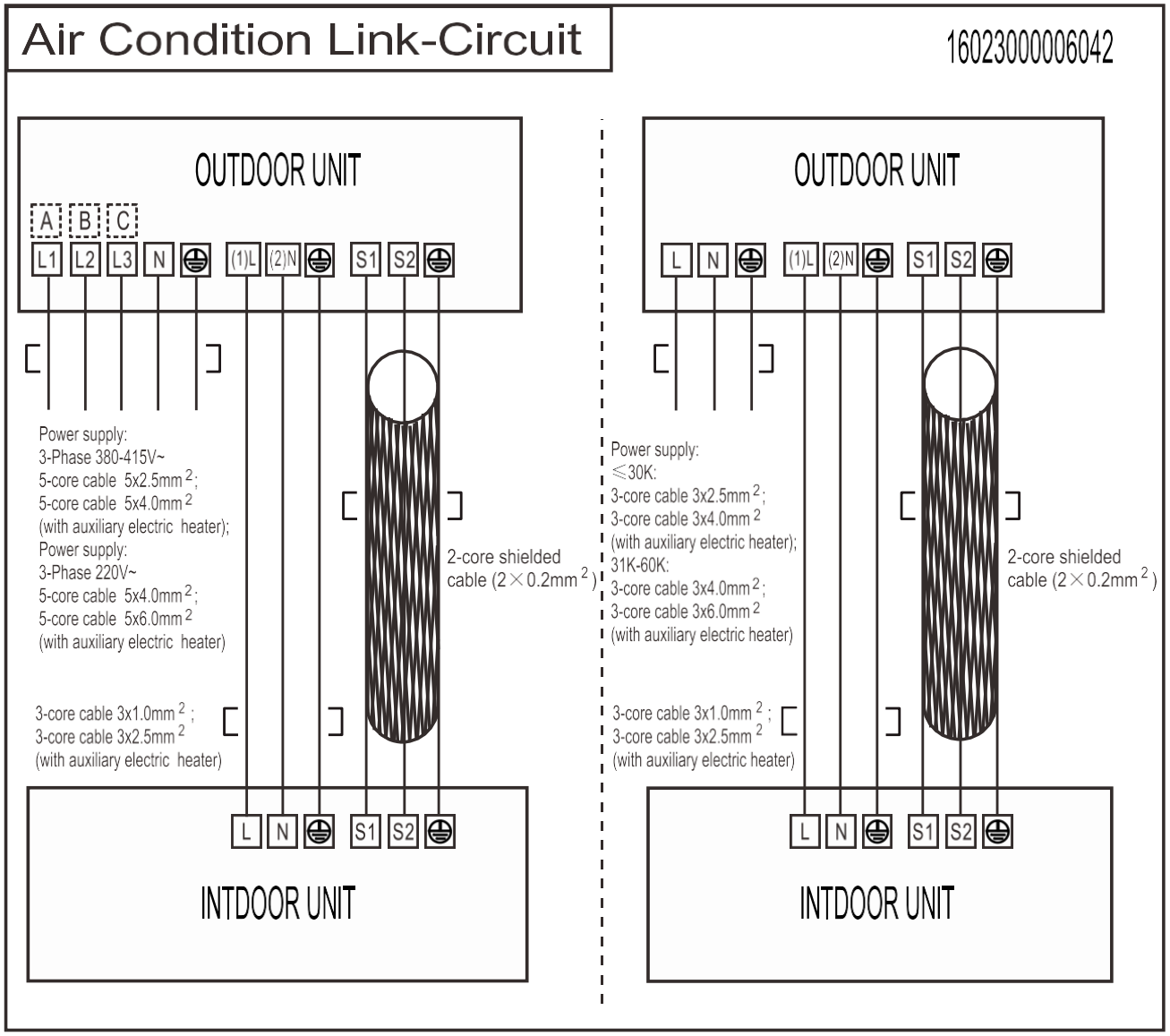

Compact Four-way Cassette Type

1. Features 70

2. Dimensions 71

3. Service Space 72

4. Wiring Diagrams 73

5. Air Velocity and Temperature Distributions (Reference Data) 79

6. Electric Characteristics 80

7. Sound Levels 80

8. Accessories 81

9. The Specification of Power 81

10. Field Wiring 82

1. Features

1.1 New panel

- 360°surrounding air outlet design, affords comfortable feeling

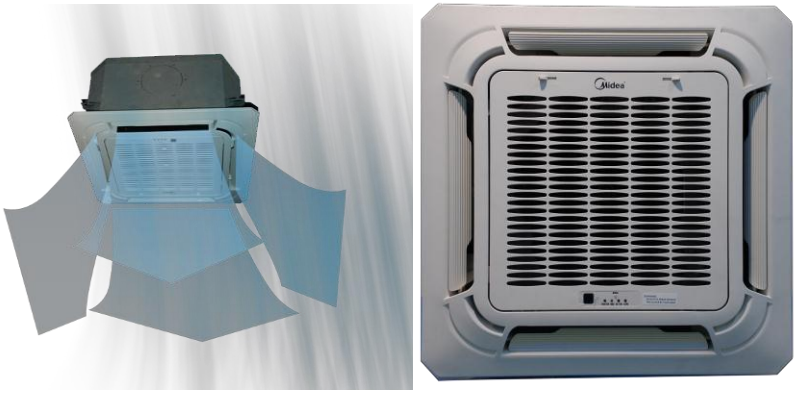

1.2 Compact design

- The body size is 570×260×570mm, it's just smaller than the ceiling board, so it's very easy for installation and will not damage the decoration. The panel size is 647×50×647mm.
- The hooks are designed in the four corners of the body, which can save installation space.

1.3 Electric control box built-in design

- The E-box is simply and safely built inside the indoor unit. It's convenient for installation and maintenance. Can check the control part easily, you only need to open the air return grille.

2. Dimensions

KCA3U-12HRF32X

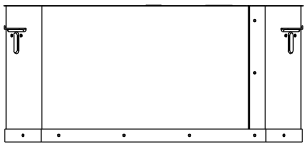

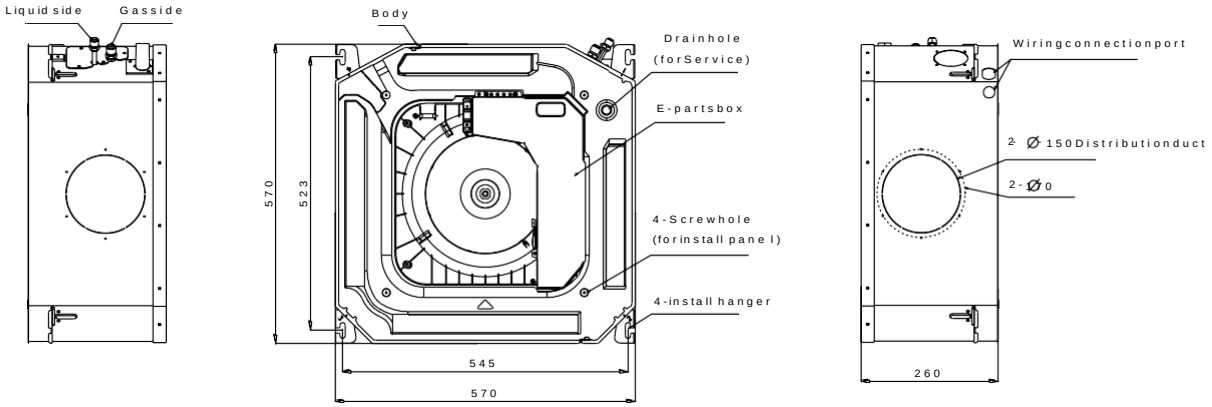

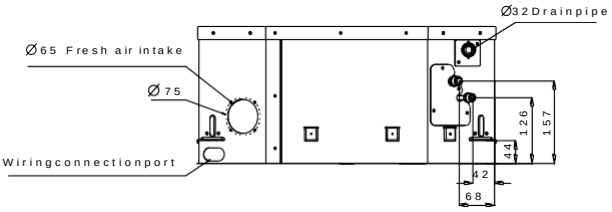

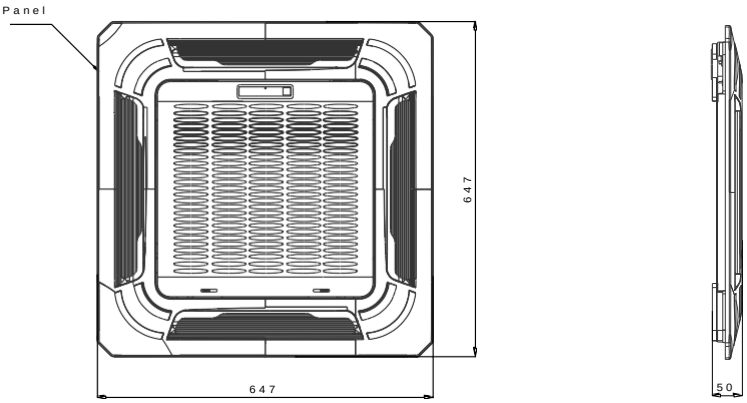

3. Service Space

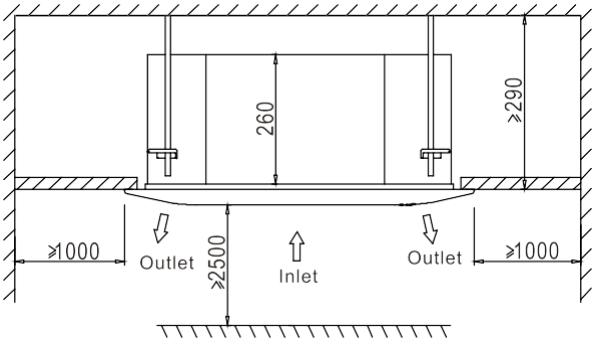

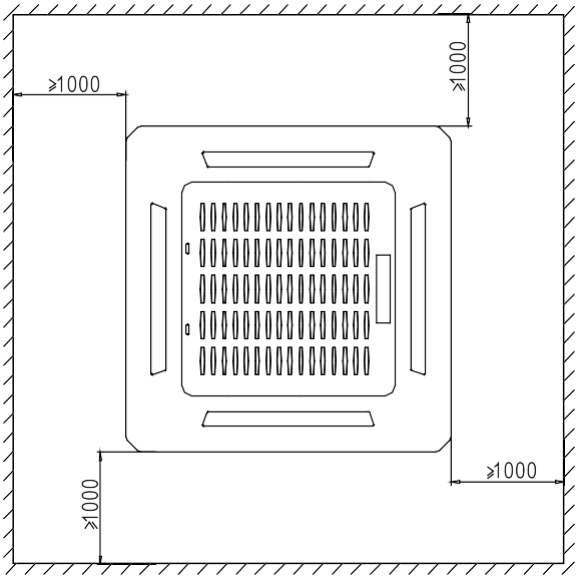

4. Wiring Diagrams

KCA3U-12HRF32X

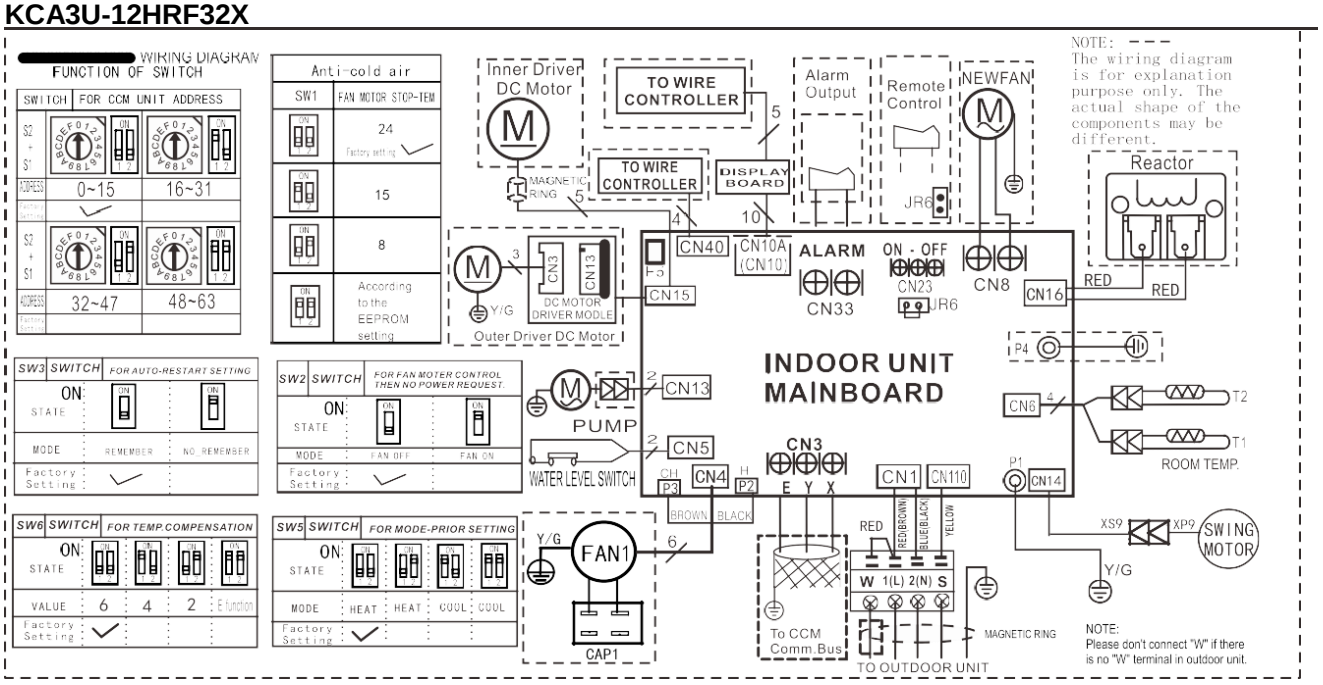

4.1 Some connectors introduce:

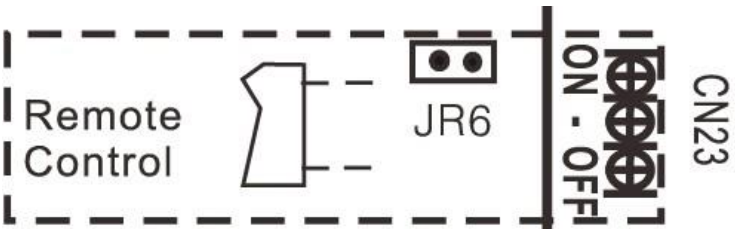

A For remote control (ON-OFF) terminal port CN23 and short connector of JR6

1. Remove the short connector of JR6 when you use ON-OFF function;
2. When remote switch off (OPEN), the unit would be off;
3. When remote switch on (CLOSE), the unit would be on;
4. When close/open the remote switch, the unit would be responded the demand within 2 seconds;
5. When the remote switch on. you can use remote controller/ wire controller to select the mode what you want; when the remote switch off, the unit would not respond the demand from remote controller/wire controller.

When the remote switch off , but the remote controller/ wire controller are on, CP code would be shown on the display board.

6.The voltage of the port is 12V DC, design Max. current is 5mA.

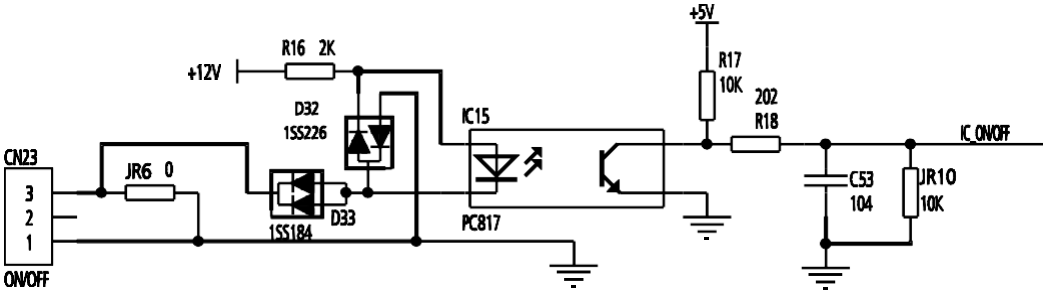

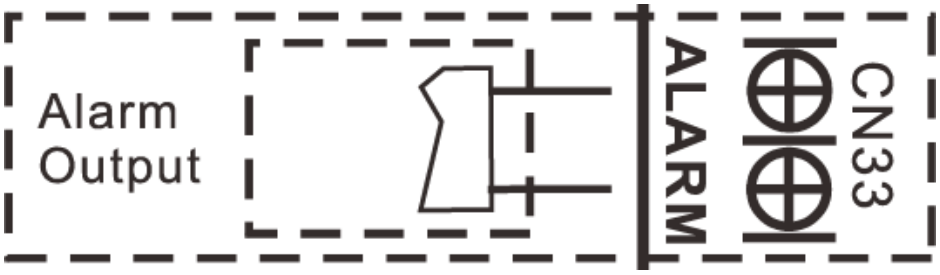

B For ALARM terminal port CN33

1. Provide the terminal port to connect ALARM, but no voltage of the terminal port, the power from the ALARM system (not from the unit)
2. Although design voltage can support higher voltage, but we strongly ask you connect the power less than 24V, current less than 0.5A
3. When the unit occurs the problem, the relay would be closed, then ALARM works

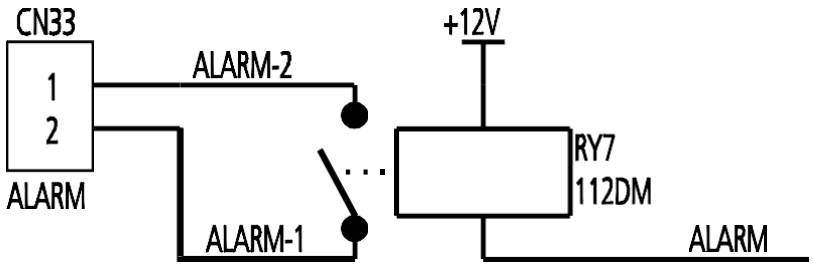

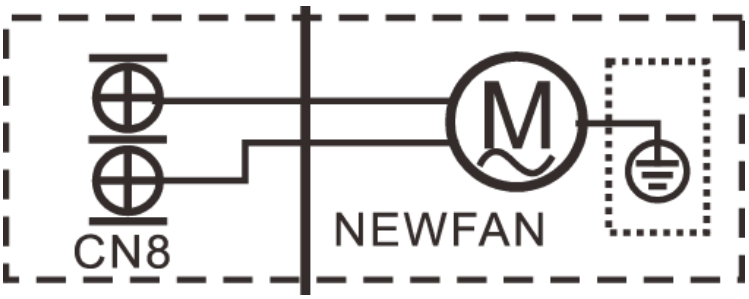

C. For new fresh motor terminal port CN8

1. Connect the fan motor to the port, no need care L/N of the motor;
2. The output voltage is the power supply;
3. The fresh motor cannot excess 200W or 1A, follow the smaller one;
4. The new fresh motor will be worked when the indoor fan motor work; when the indoor fan motor stops , the new fresh motor would be stopped;
5. When the unit enter force cooling mode or capacity testing mode, the fresh motor isn't work.

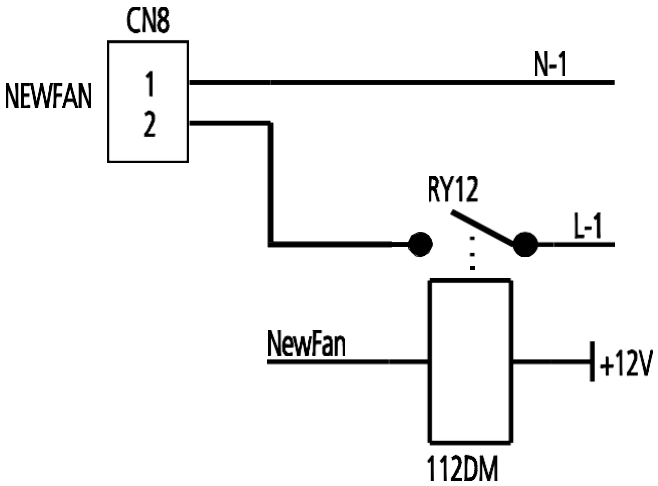

4.2 Micro-Switch Introduce:

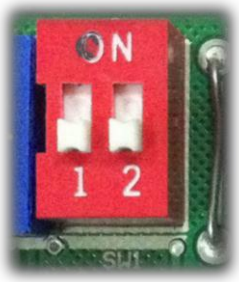

Anti-cold air	
SW1	FAN MOTOR STOP-TEM
ON 1 2	24 Factory setting ✓
ON 1 2	15
ON 1 2	8
ON 1 2	According to the EEPROM setting

A. Micro-switch SW1 is for selection of indoor fan stop temperature (TEL0) when it is in anti-cold wind action in heating mode.
Range: 24ºC, 15ºC, 8 ºC, according to EEROM setting (reserved for special customizing).

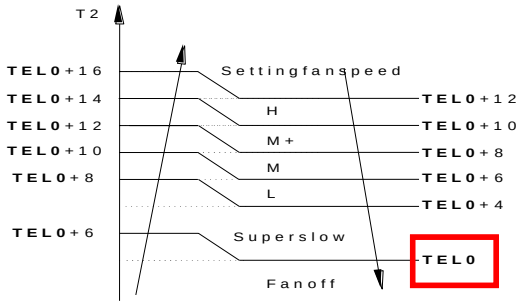

SW2	SWITCH	FOR FAN MOTER CONTROL THEN NO POWER REQUEST.	
ON: STATE		ON	ON
MODE		FAN OFF	FAN ON
Factory Setting		✓	

B.Micro-switch SW2 is for selection of indoor FAN ACTION if room temperature reaches the setpoint and the compressor stops.
Range: OFF (in 127s), Keep running.

SW3	SWITCH	FOR AUTO-RESTART SETTING	
ON: STATE		ON	ON
MODE		REMEMBER	NO_REMEMBER
Factory Setting		✓	

C.Micro-switch SW3 is for selection of auto-restart function.
Range: Active, inactive

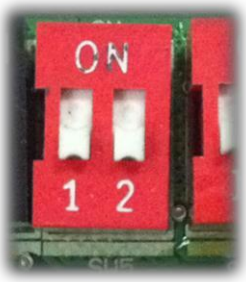

SW5	SWITCH	FOR MAIN-SLAVE SETTING		
STATE	ON	ON	ON	ON
MODE	MAIN NO SLAVE	MAIN	MAIN	SLAVE
Factory Setting	✓			

D. Micro-switch SW5 is for setting the master or slave unit when the unit is in twin connection.
Range: Master no slave (Normal 1 drive 1 connection), Master (2 positions without difference), Slave

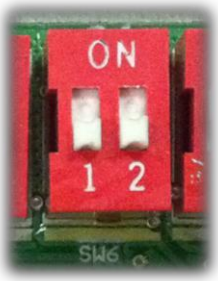

SW6	SWITCH	FOR TEMP. COMPENSATION		
STATE	ON	ON	ON	ON
VALUE	6	4	2	E function
Factory Setting	✓			

E.Micro-switch SW6 is for selection of temperature compensation in heating mode. This helps to reduce the real temperature difference between ceiling and floor so that the unit could run properly. If the height of installation is lower, smaller value could be chosen.
Range: 6ºC, 4ºC, 2ºC, E function (reserved for special customizing)

SWITCH	FOR CCM UNIT ADDRESS	
S2 + S1		
ADDRESS	0~15	16~31
Factory Setting	✓	
S2 + S1		
ADDRESS	32~47	48~63
Factory Setting		

F.Micro-switch S1 and dial-switch S2 are for address setting when you want to control this unit by a central controller.
Range: 00-63

ENC1	SWITCH	(FOR POWER)
	NUMBER	POWER
	4	4000W-5300W (2.0HP)
	5	5400W-7100W (2.5HP)
	6	/
	7	7500W-9000W (3.2HP)
	8	9100W-10500W (4.0HP)
	9	12000W-14000W (5.0HP)
	A	14500W-16000W (6.0HP)

G. Dial-switch ENC1: The indoor PCB is universal designed for whole series units from 18K to 55K. This ENC1 setting will tell the main program what size the unit is.

NOTE: Usually there is glue on it because the switch position cannot be changed at random unless you want to use this PCB as a spare part to use in another unit. Then you have to select the right position to match the size of the unit.

5. Air Velocity and Temperature Distributions (Reference Data)

Airflow velocity

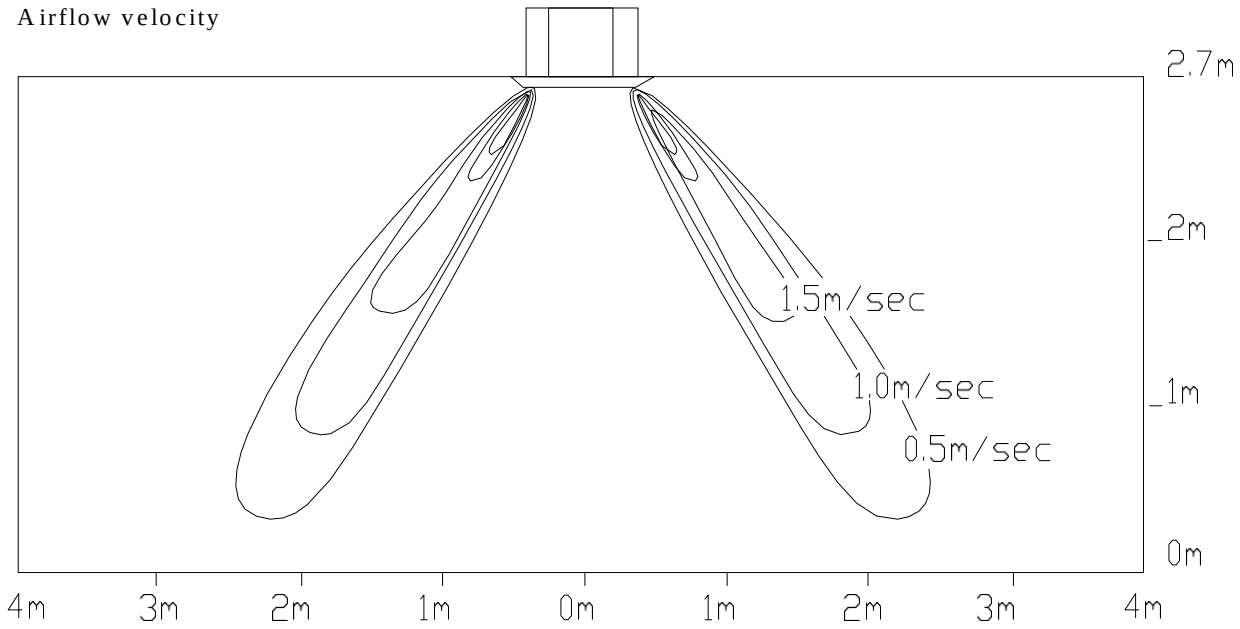

Temperature

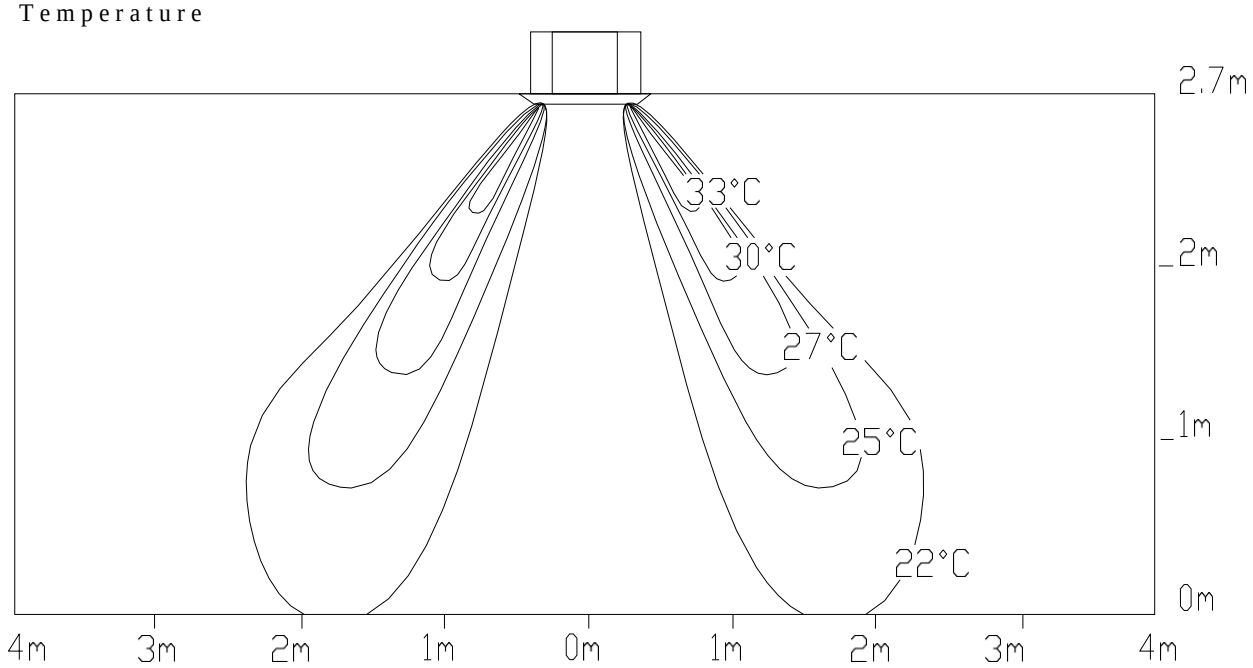

6. Electric Characteristics

Model	Indoor Units				Power Supply
	Hz	Voltage	Min.	Max.	MFA
KCA3U-12HRF32X	50	220-240V	198V	254V	/

Note:

MFA: Max. Fuse Amps. (A)

7. Sound Levels

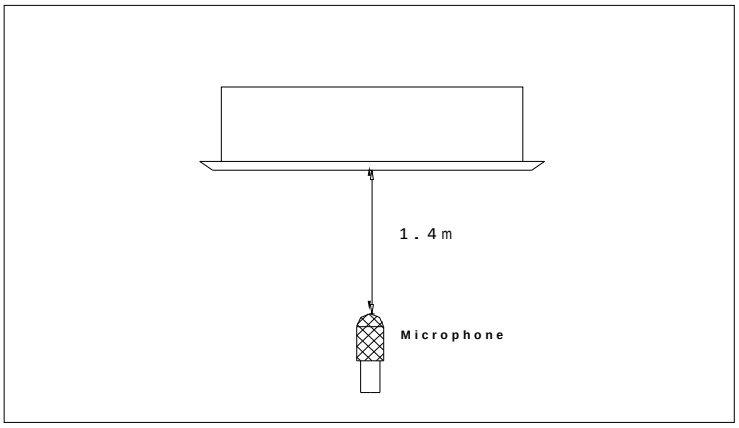

Model	Noise Power dB(A)	Noise level dB(A)		
		H	M	L
KCA3U-12HRF32X	51	41	36	33

8. Accessories

	Name	Shape	Quantity
Installation Fittings	Installation paper board		1
Tubing & Fittings	Soundproof / insulation sheath		1
Drainpipe Fittings	Out-let pipe sheath		1
	Out-let pipe clasp		1
	Drain joint		1
	Seal ring		1
Remote controller & Its Frame(The product you have might not be provided the following accessories)	Remote controller & Its Frame		1
	Remote controller holder		1
	Mounting screw(ST2.9×10-C-H)		2
	Remote controller manual		1
	Alkaline dry batteries (AM4)		2
Others	Owner's manual		1
	Installation manual		1
Installation accessory (The product you have might not be provided the following accessories	Expansible hook		4
	Installation hook		4
	Orifice		1

9. The Specification of Power

Model(kBtu/h)		12
POWER	Phase	1-phase
	Frequency and Voltage	220-240V, 50Hz
	POWER WIRING (mm^2)	3×2.5
CIRCUIT BREAKER/Fuse (A)		20/16
Indoor/Outdoor Connecting Wiring(Weak Electric Signal) (mm^2)		——
Indoor/Outdoor Connecting Wiring(Strong Electric Signal)(mm^2)		4×1.0(4x2.5 with auxiliary electric heater)

10. Field Wiring

KCA3U-12HRF32X

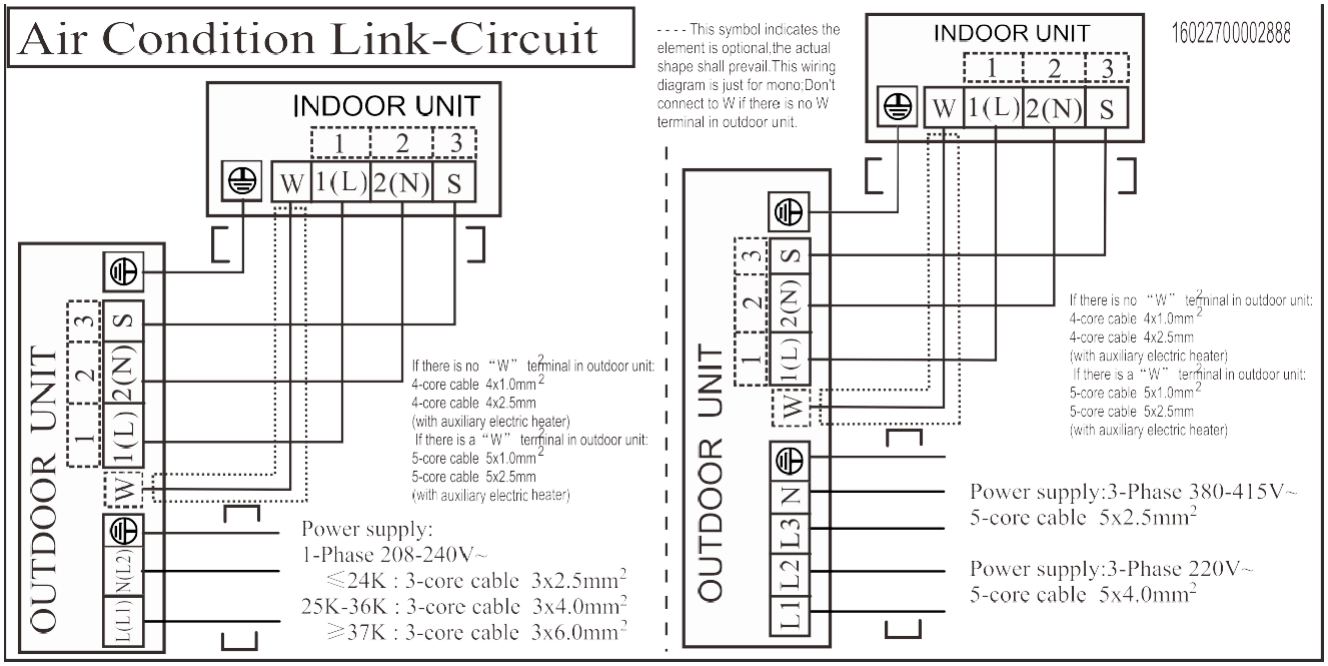

Part 3
Outdoor Units

1. Dimensions.....84

2. Service Space.....86

3. Wiring Diagrams 87

4. Piping Diagrams.....95

5. Electric Characteristics 96

6. Operation Limits 97

7. Sound Levels.....98

1. Dimensions

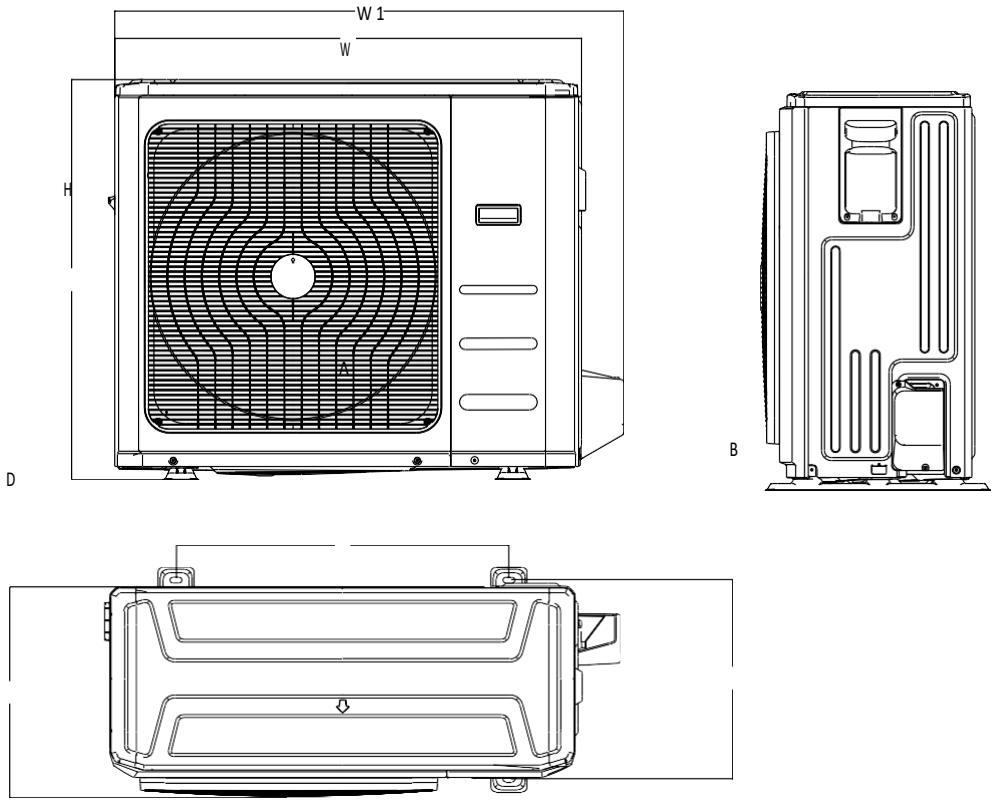

Model	Unit：mm					
	W	D	H	W1	A	B
KOB30-12HFN32X	800	333	554	870	514	340
KOB30U-18HFN32	800	333	554	870	514	340
KOCA30U-24HFN32	845	363	702	914	540	350
KOD30U-36HFN32	946	410	810	1030	673	403

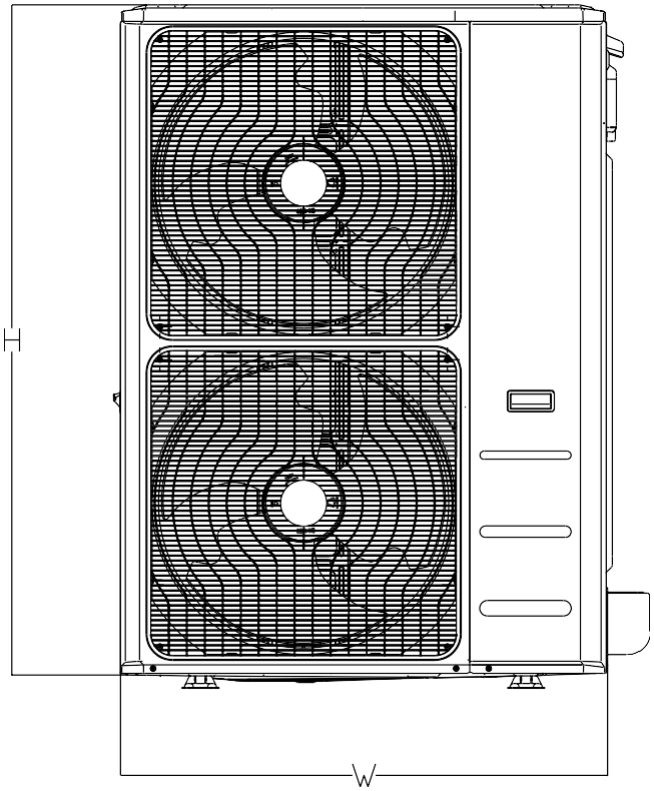

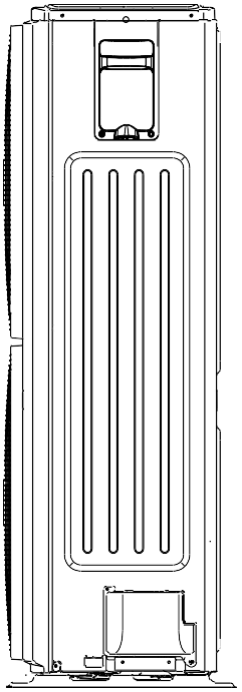

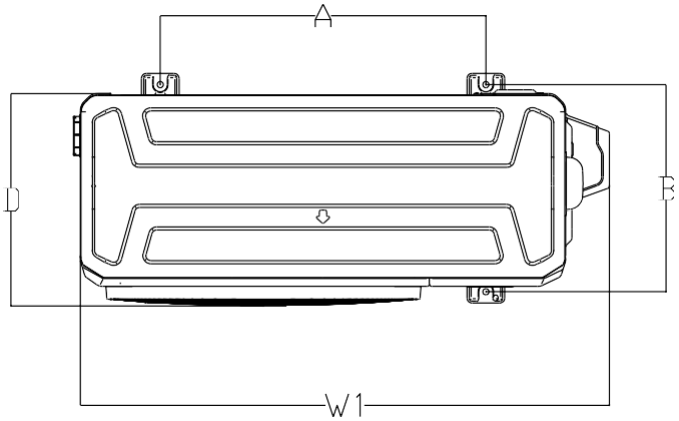

Model	Unit : mm					
	W	D	H	W1	A	B
KOE30U-48HFN32	952	415	1333	1045	634	404
KOE30U-55HFN32	952	415	1333	1045	634	404

2. Service Space

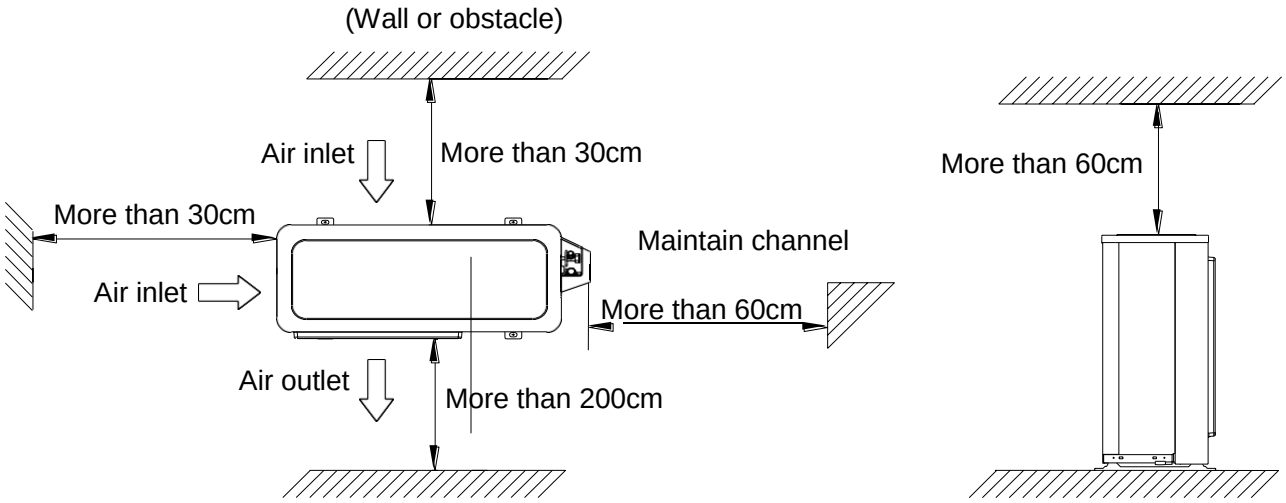

3. Wiring Diagrams

KOB30-12HFN32X

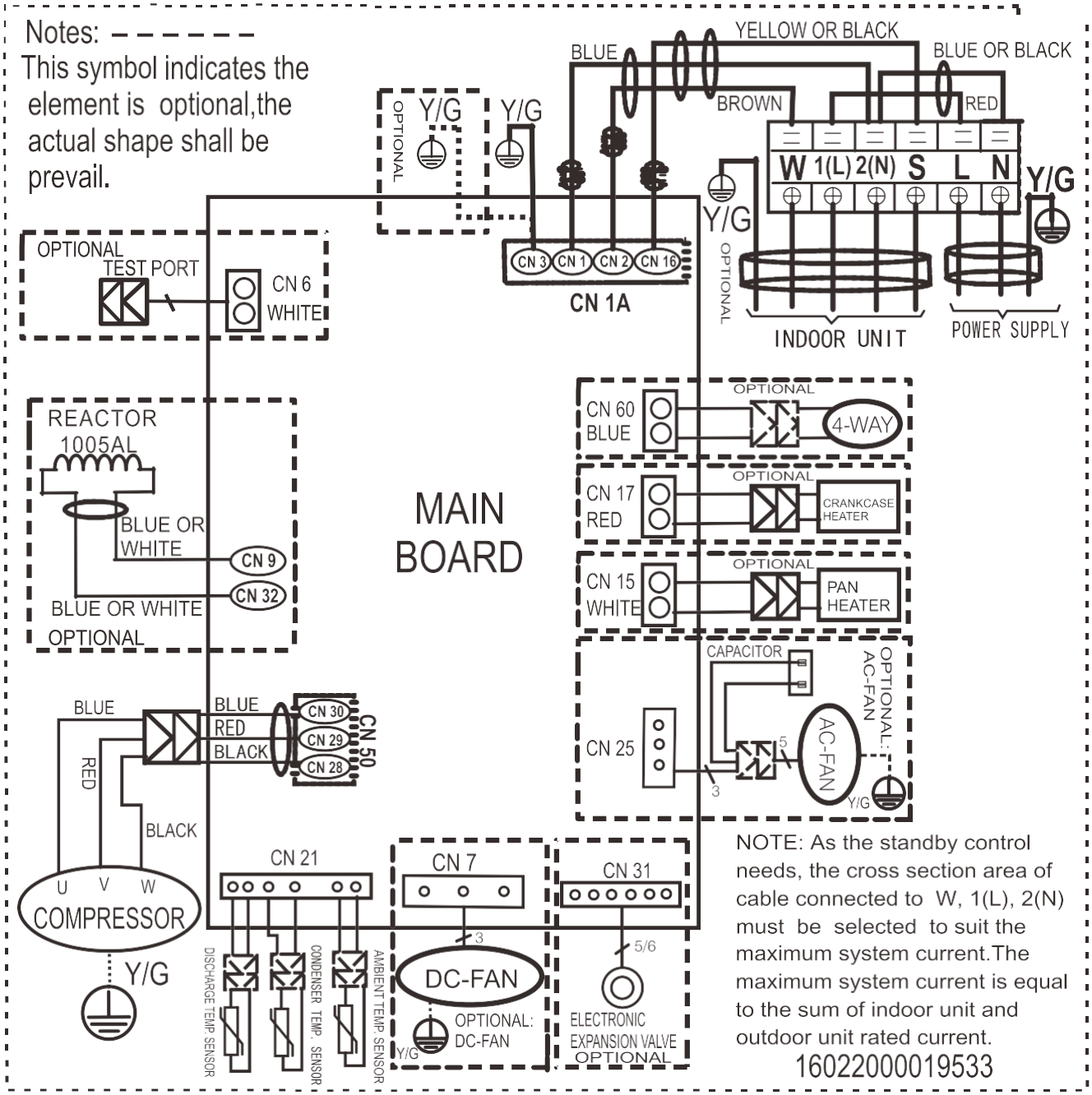

KOB30U-18HFN32

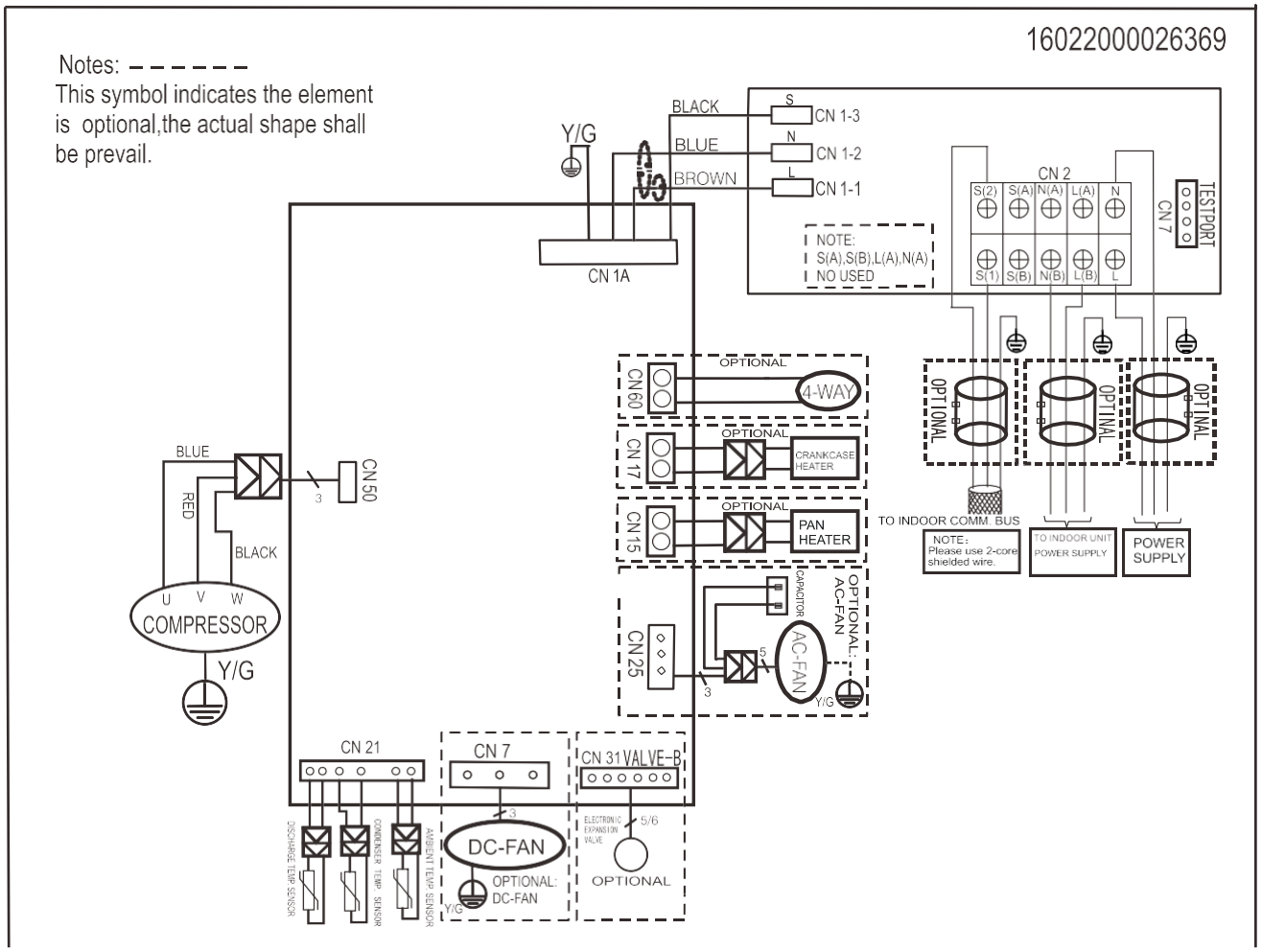

KOCA30U-24HFN32

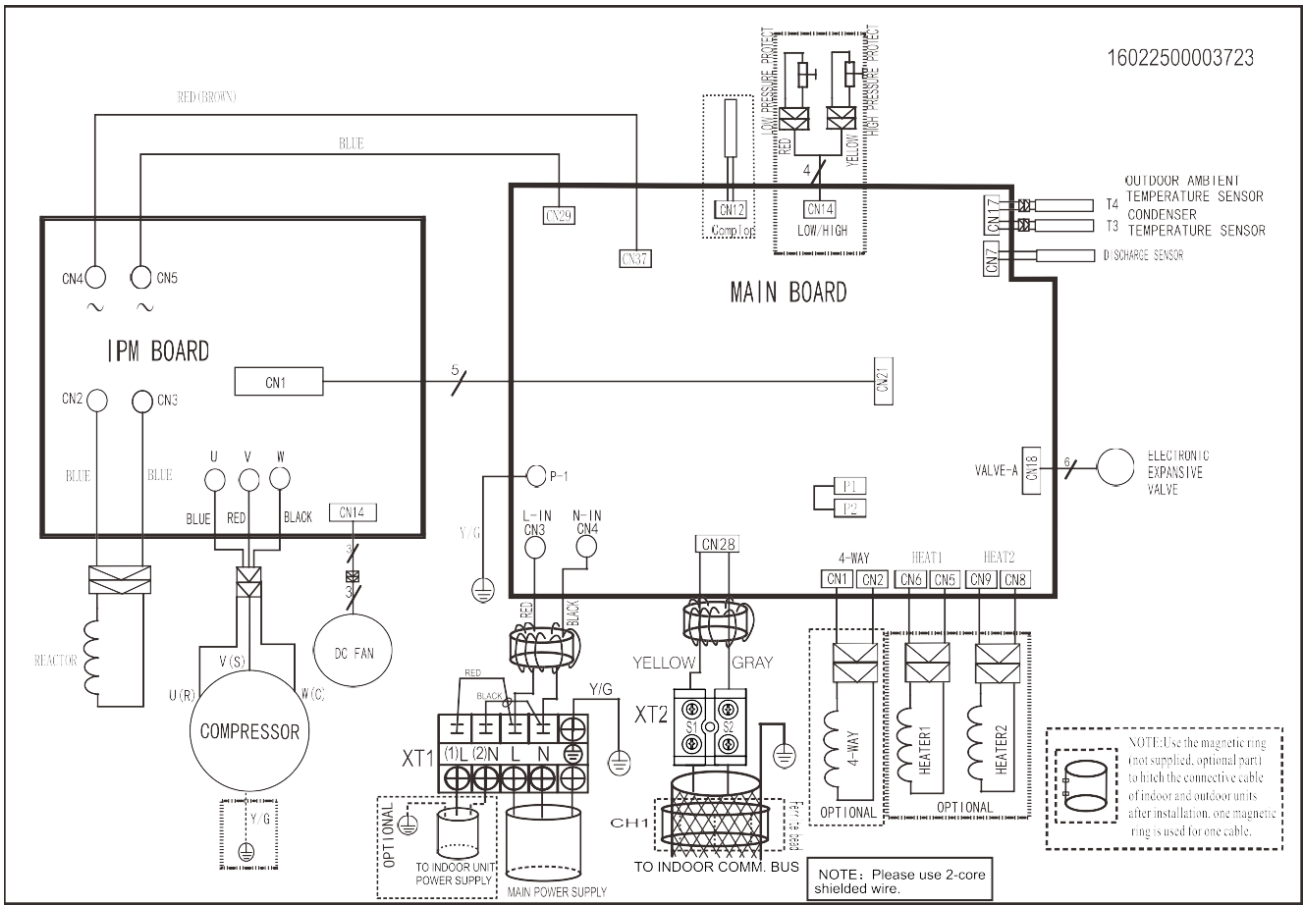

KOD30U-36HFN32

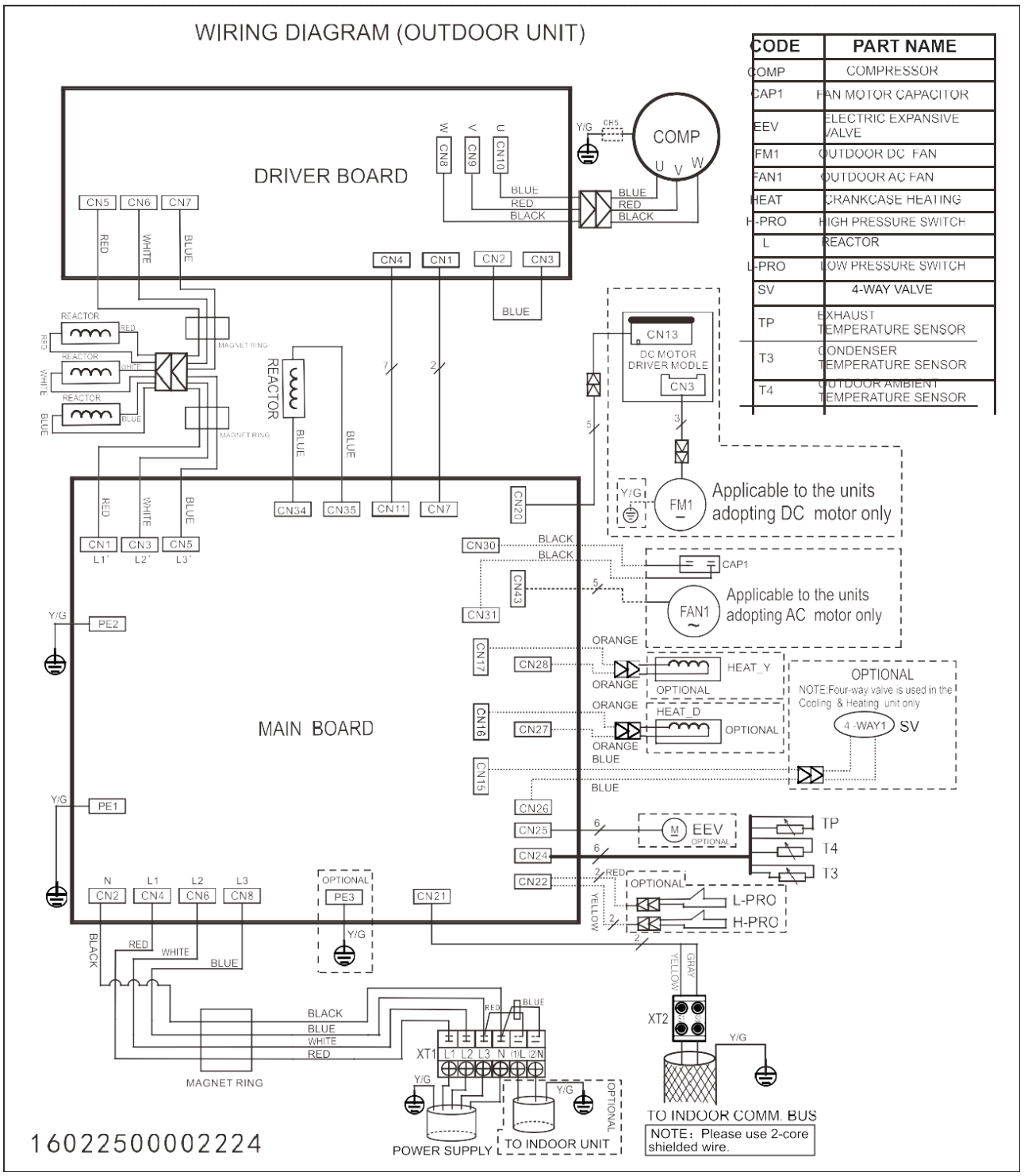

CODE	PART NAME
COMP	COMPRESSOR
CAP1	FAN MOTOR CAPACITOR
EEV	ELECTRIC EXPANSIVE VALVE
FM1	OUTDOOR DC FAN
FAN1	OUTDOOR AC FAN
HEAT	CRANKCASE HEATING
H-PRO	HIGH PRESSURE SWITCH
L	REACTOR
L-PRO	LOW PRESSURE SWITCH
SV	4-WAY VALVE
TP	EXHAUST TEMPERATURE SENSOR
T3	CONDENSER TEMPERATURE SENSOR
T4	OUTDOOR AMBIENT TEMPERATURE SENSOR

KOE30U-48HFN32, KOE30U-55HFN32

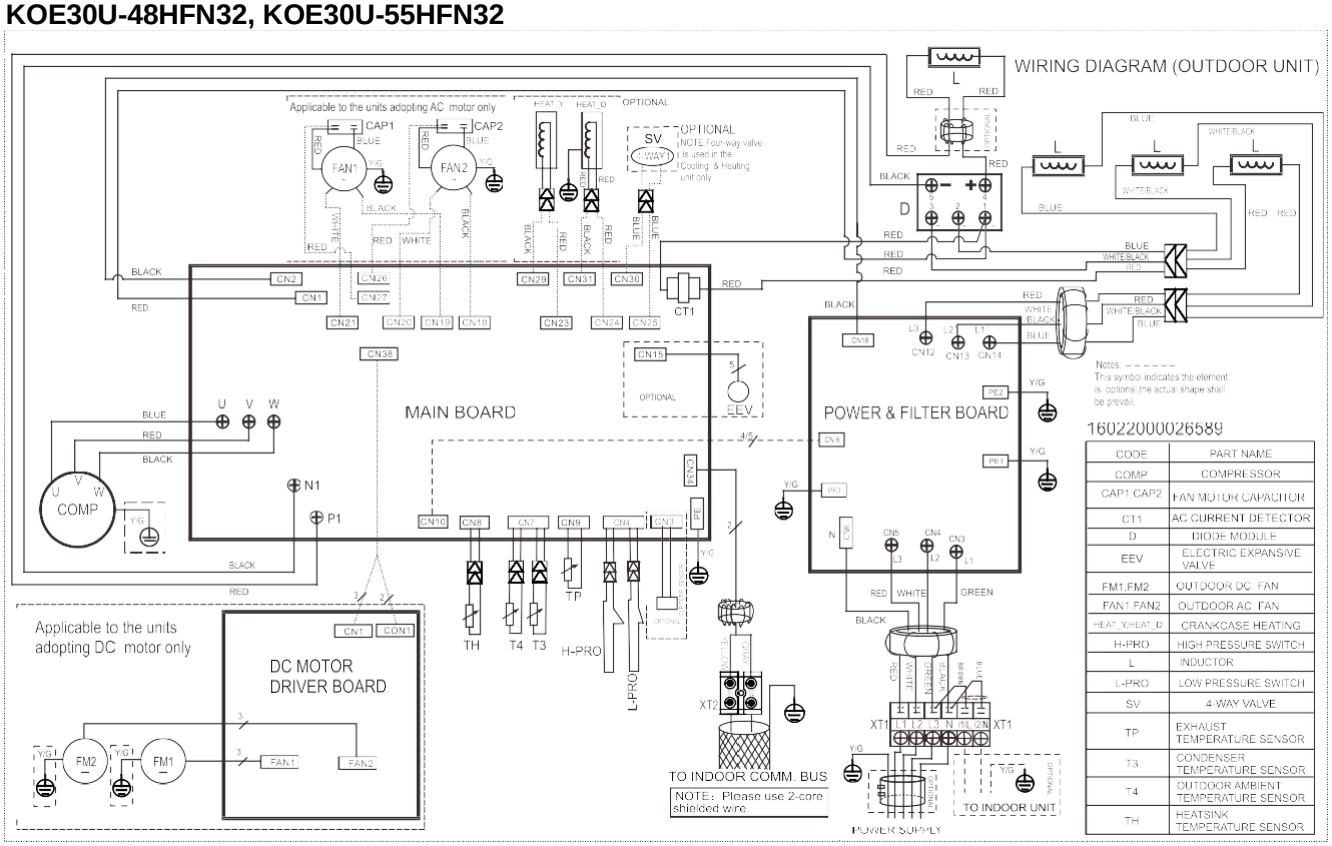

CODE	PART NAME
COMP	COMPRESSOR
CAP1,CAP2	FAN MOTOR CAPACITOR
CT1	AC CURRENT DETECTOR
D	DIODE MODULE
EEV	ELECTRIC EXPANSIVE VALVE
FM1,FM2	OUTDOOR DC FAN
FAN1,FAN2	OUTDOOR AC FAN
HEAT_Y,HEAT_D	CRANKCASE HEATING
H-PRO	HIGH PRESSURE SWITCH
L	INDUCTOR
L-PRO	LOW PRESSURE SWITCH
SV	4-WAY VALVE
TP	EXHAUST TEMPERATURE SENSOR
T3	CONDENSER TEMPERATURE SENSOR
T4	OUTDOOR AMBIENT TEMPERATURE SENSOR
TH	HEATSINK TEMPERATURE SENSOR

4. Piping Diagrams

KOB30-12HFN32X, KOB30U-18HFN32, KOCA30U-24HFN32,

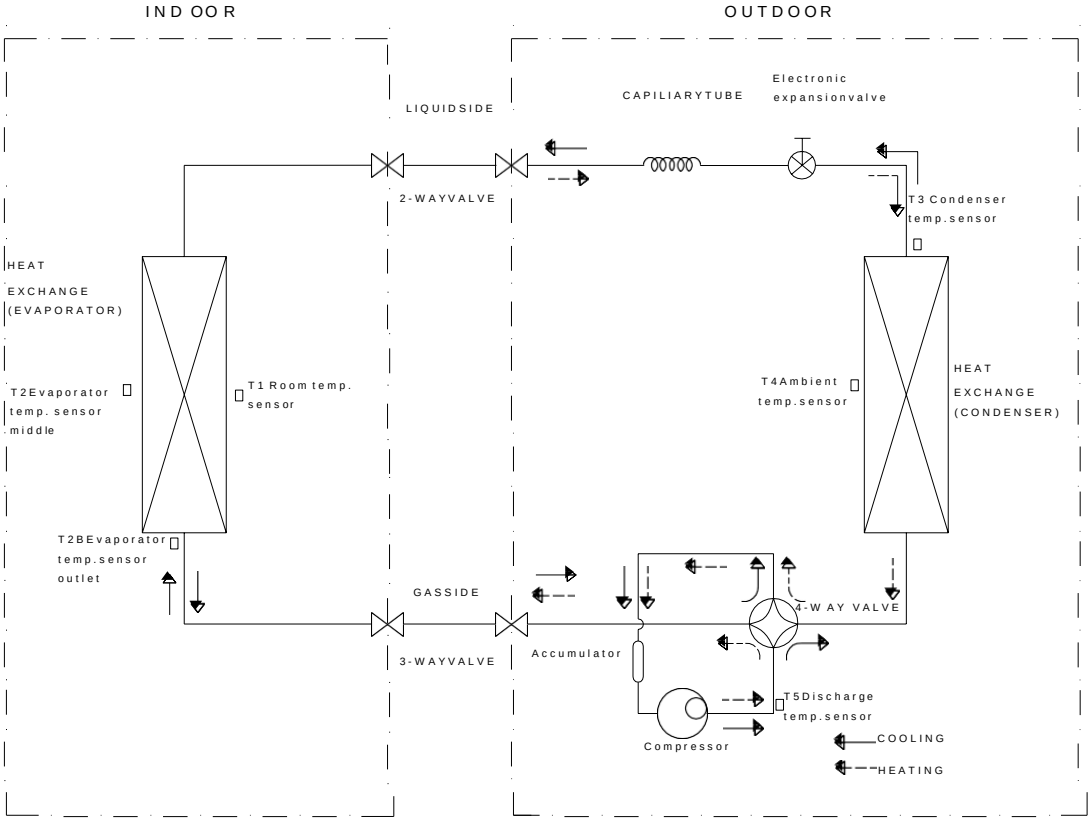

For KOCA30U-24HFN32 there is no accumulator.

KOD30U-36HFN32, KOE30U-48HFN32, KOE30U-55HFN32

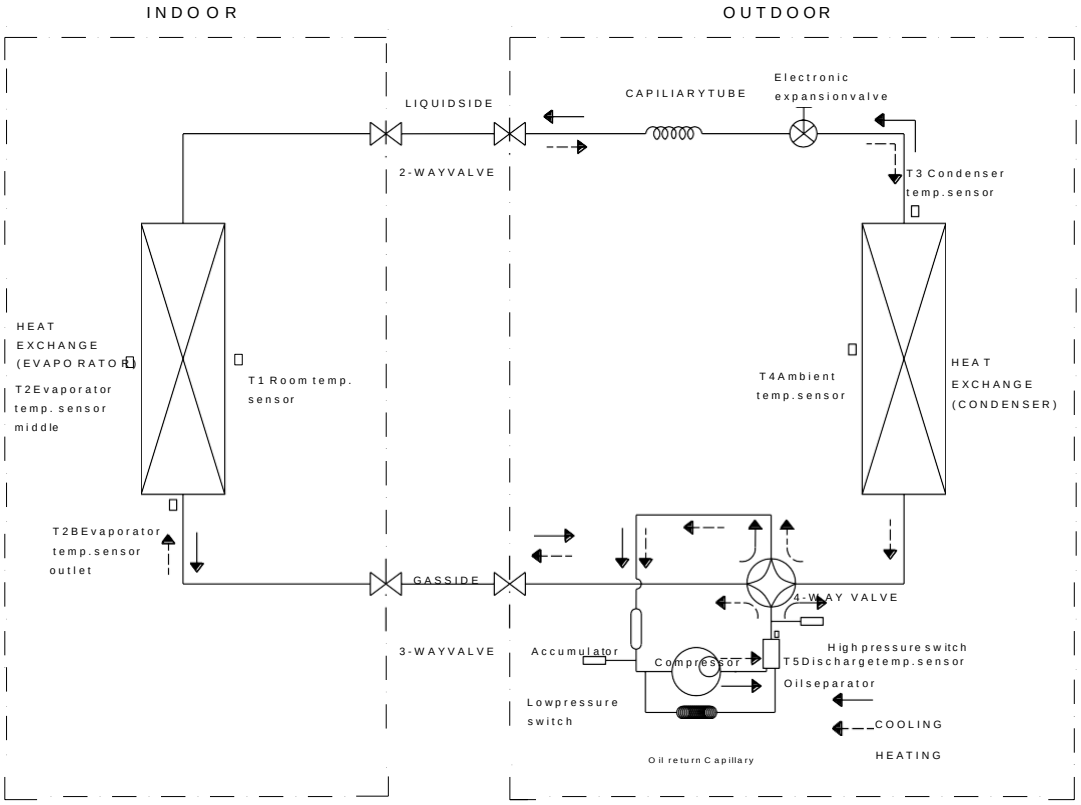

5. Electric Characteristics

Model	Outdoor Unit				Power Supply
	Hz	Voltage	Min.	Max.	MFA
KOB30-12HFN32X	50	220-240V	198V	254V	20
KOB30U-18HFN32	50	220-240V	198V	254V	20
KOCA30U-24HFN32	50	220-240V	198V	254V	20
KOD30U-36HFN32	50	380-415V	342V	440V	20
KOE30U-48HFN32	50	380-415V	342V	440V	25
KOE30U-55HFN32	50	380-415V	342V	440V	25

Notes:
MFA: Max. Fuse Amps. (A)

6. Operation Limits

Temperature / Mode	Cooling operation	Heating operation	Drying operation
Room temperature	17℃～32℃	0℃～30℃	17℃～32℃
Outdoor temperature	0℃～50℃	-15℃～24℃	0℃～50℃
	（-15℃～50℃：For the models with low temperature cooling system）		

CAUTION:

1. If the air conditioner is used beyond the above conditions, certain safety protection features may come into operation and cause the unit to operate abnormally.
2. The room relative humidity should be less than 80%. If the air conditioner operates beyond this figure, the surface of the air conditioner may attract condensation. Please set the vertical air flow louver to its maximum angle (vertically to the floor), and set HIGH fan mode.
3. The optimum performance will be achieved during this operating temperature zone.

7. Sound Levels

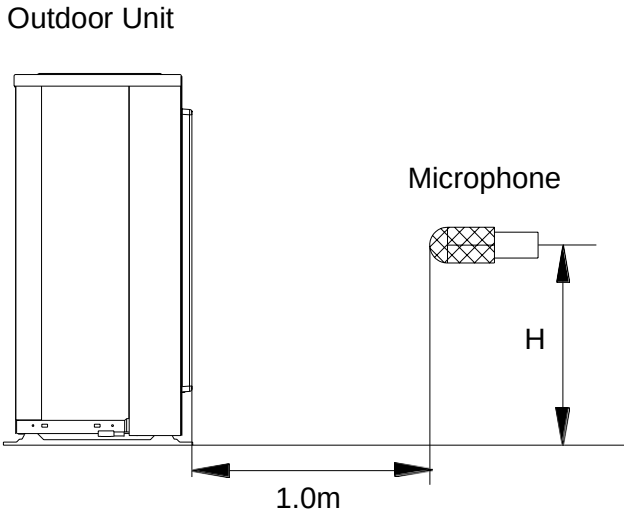

Note: H= 0.5 × height of outdoor unit

Model	Noise Power dB(A)	Noise level dB(A)
KOB30-12HFN32X	61	55.5
KOB30U-18HFN32	65	57
KOCA30U-24HFN32	65	62
KOD30U-36HFN32	66	64
KOE30U-48HFN32	74	66
KOE30U-55HFN32	74	65

Part 4
Installation

1. Installation Procedure 100
2. Location selection 101
3. Indoor unit installation 102
4. Outdoor unit installation (Side Discharge Unit) 115
5. Refrigerant pipe installation.....116
6. Drainage pipe installation 120
7. Vacuum Drying and Leakage Checking 124
8. Additional refrigerant charge.....125
9. Engineering of insulation.....126
10. Engineering of electrical wiring.....127
11. Test operation 128

1. Installation Procedure

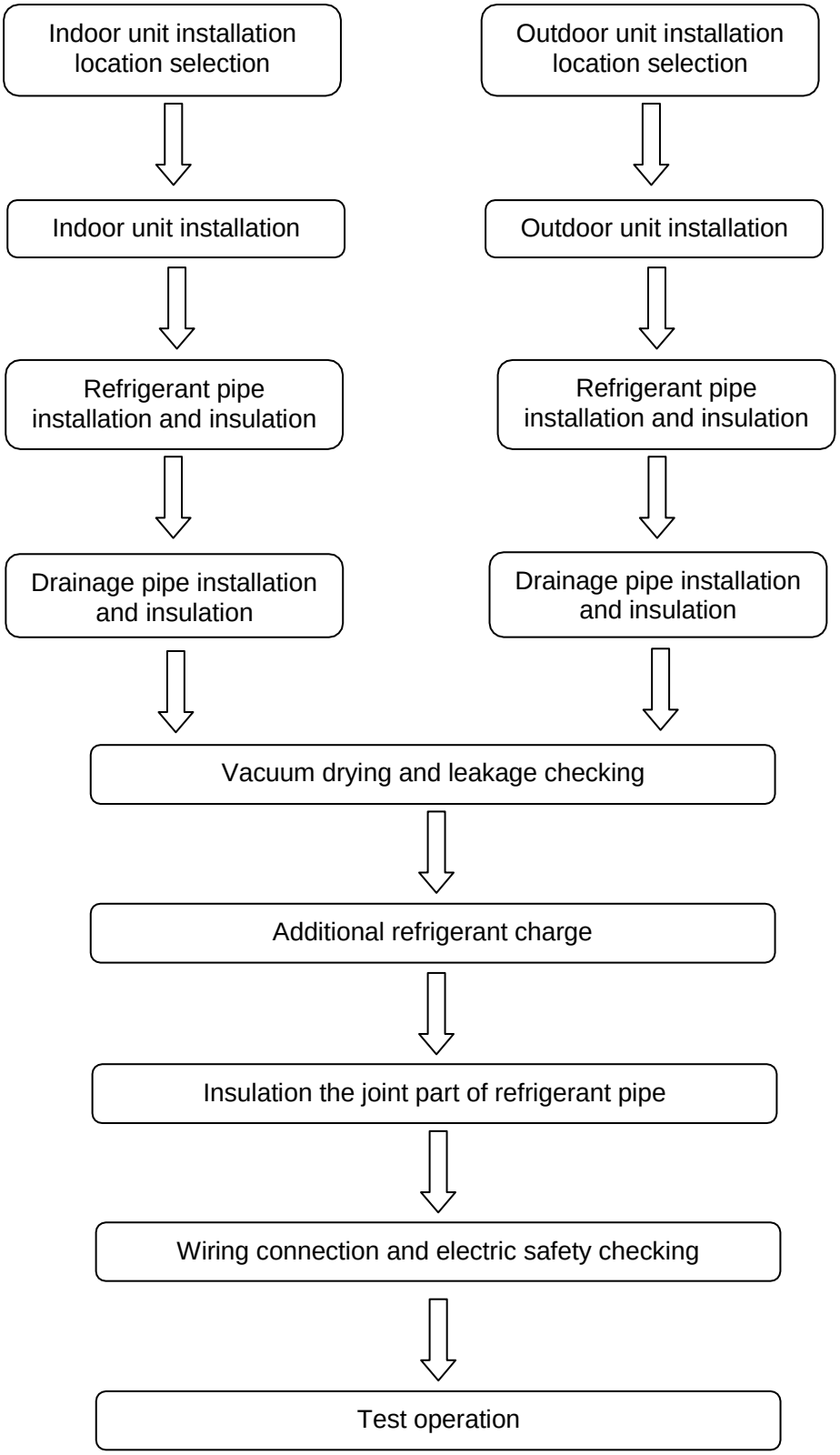

2. Location selection

2.1 Indoor unit location selection

- The place shall easily support the indoor unit's weight.
- The place can ensure the indoor unit installation and inspection.
- The place can ensure the indoor unit horizontally installed.
- The place shall allow easy water drainage.
- The place shall easily connect with the outdoor unit.
- The place where air circulation in the room should be good.
- There should not be any heat source or steam near the unit.
- There should not be any oil gas near the unit
- There should not be any corrosive gas near the unit
- There should not be any salty air neat the unit
- There should not be strong electromagnetic wave near the unit
- There should not be inflammable materials or gas near the unit
- There should not be strong voltage vibration.

2.2 Outdoor unit location selection

- The place shall easily support the outdoor unit's weight.
- Locate the outdoor unit as close to indoor unit as possible
- The piping length and height drop can not exceed the allowable value.
- The place where the noise, vibration and outlet air do not disturb the neighbors.
- There is enough room for installation and maintenance.
- The air outlet and the air inlet are not impeded, and not face the strong wind.
- It is easy to install the connecting pipes and cables.
- There is no danger of fire due to leakage of inflammable gas.
- It should be a dry and well ventilation place
- The support should be flat and horizontal
- Do not install the outdoor unit in a dirty or severely polluted place, so as to avoid blockage of the heat exchanger in the outdoor unit.
- If is built over the unit to prevent direct sunlight, rain exposure, direct strong wend, snow and other scraps accumulation, make sure that heat radiation from the condenser is not restricted.

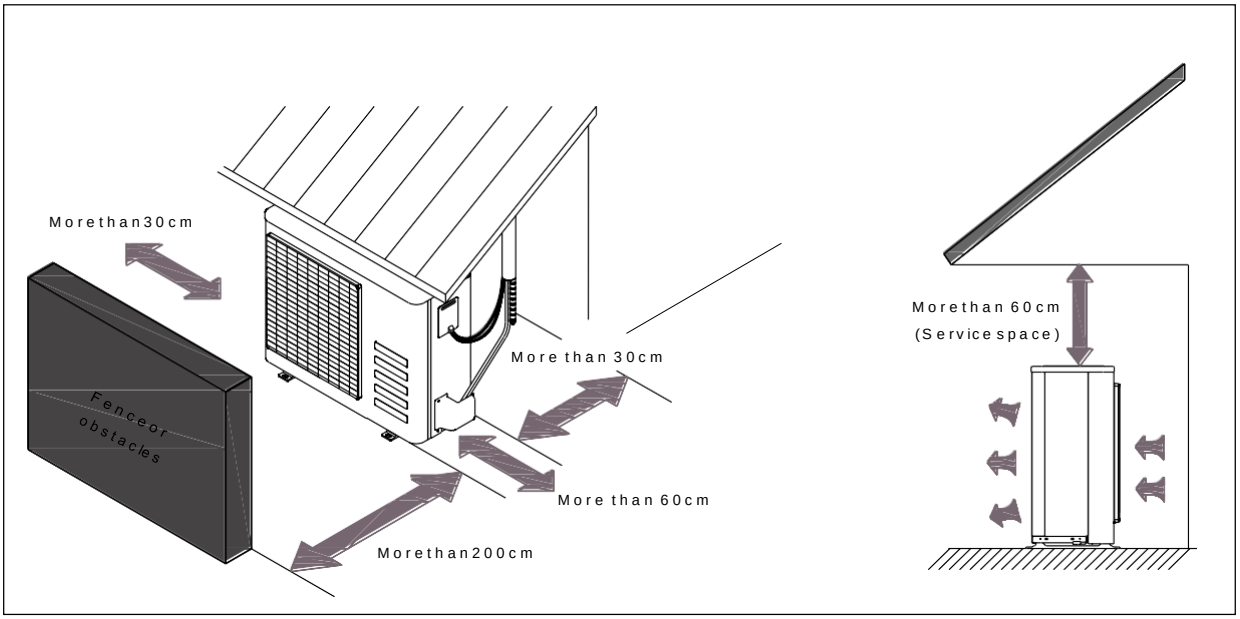

3. Indoor unit installation

3.1 Super slim cassette indoor unit installation

3.1.1 Service space for indoor unit

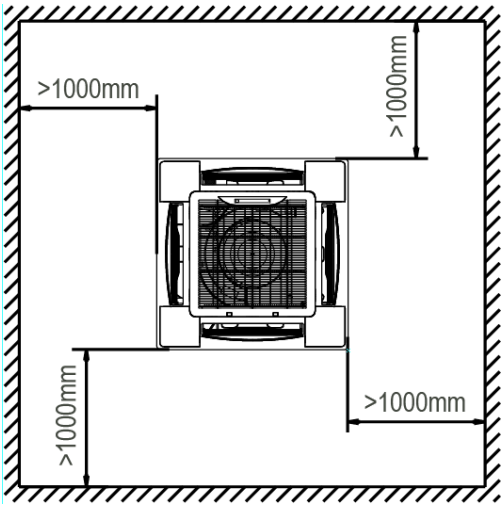

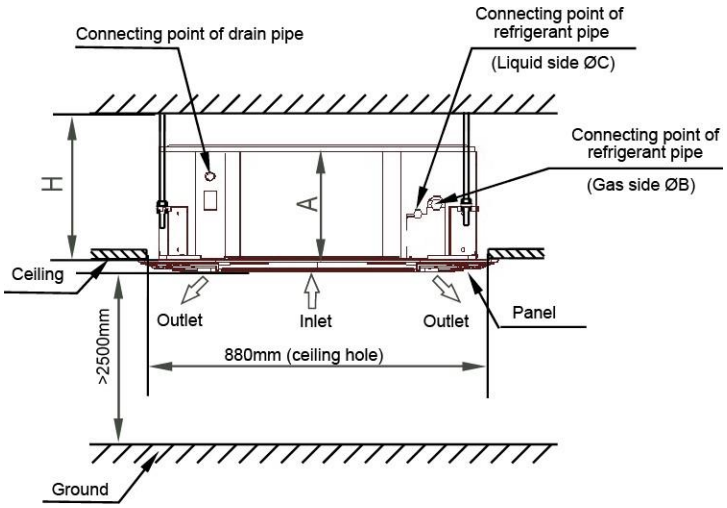

Model(kBtu/h)	A	H
24~36	245	>275
48/55	287	>317

3.1.2 Bolt pitch

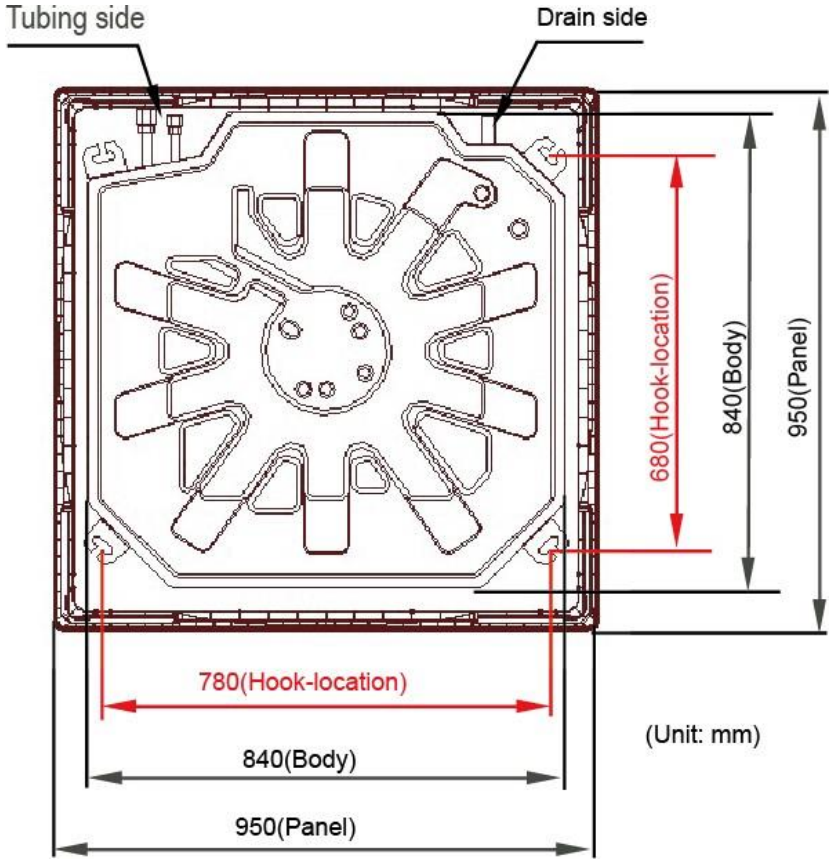

3.1.3 Install the pendant bolt

Select the position of installation hooks according to the hook holes positions showed in upper picture. Drill four holes of Ø12mm, 45~50mm deep at the selected positions on the ceiling. Then embed the expansible hooks (fittings).

3.1.4 Install the main body

Make the 4 suspender through the 4 hanger of the main body to suspend it. Adjust the hexangular nuts on the four installation hooks evenly, to ensure the balance of the body. Use a leveling instrument to make sure the levelness of the main body is within ±1°.

Adjust the position to ensure the gaps between the body and the four sides of ceiling are even. The body's lower part should sink into the ceiling for 10~12 mm. In general, L is half of the screw length of the installation hook.

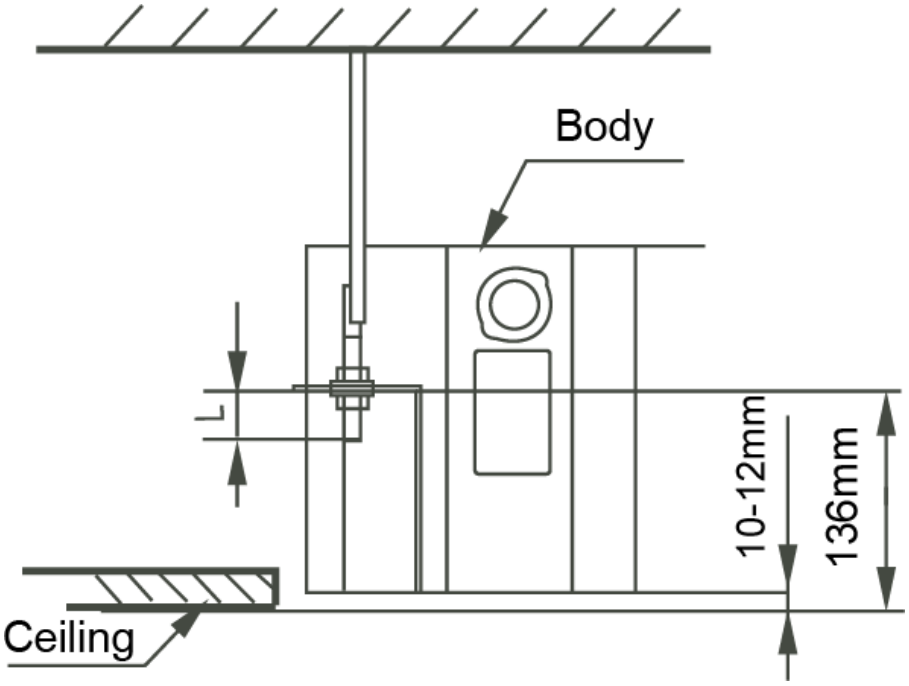

Locate the air conditioner firmly by wrenching the nuts after having adjusted the body's position well.

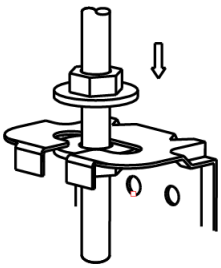

3.1.5 Install the panel

Remove the grille

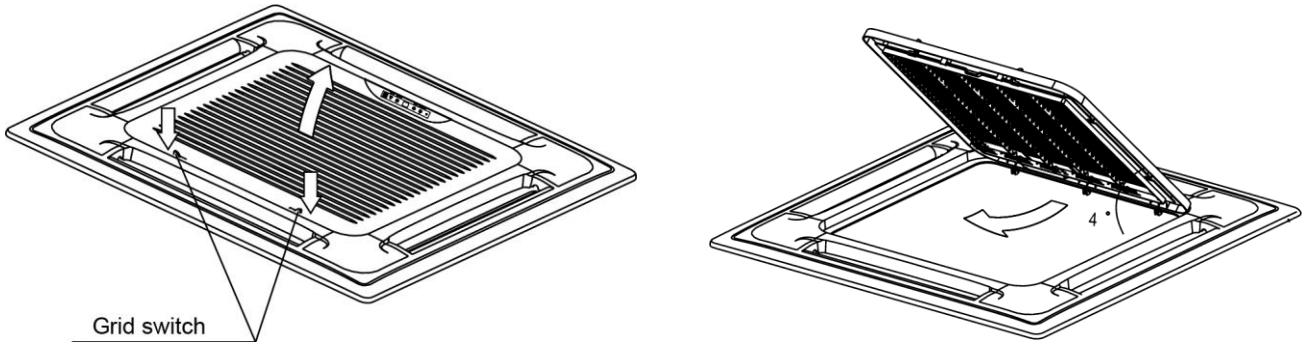

Remove the 4 corner covers.

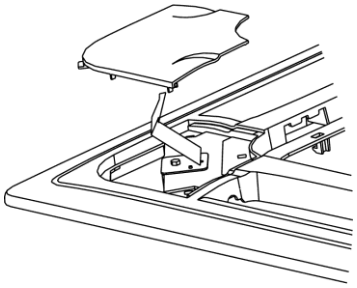

Hang the panel to the hooks on the mainbody. If the panel is with auto-lift grille, please watch the ropes lifing the grille, DO NOT make the ropes enwinded or blocked.

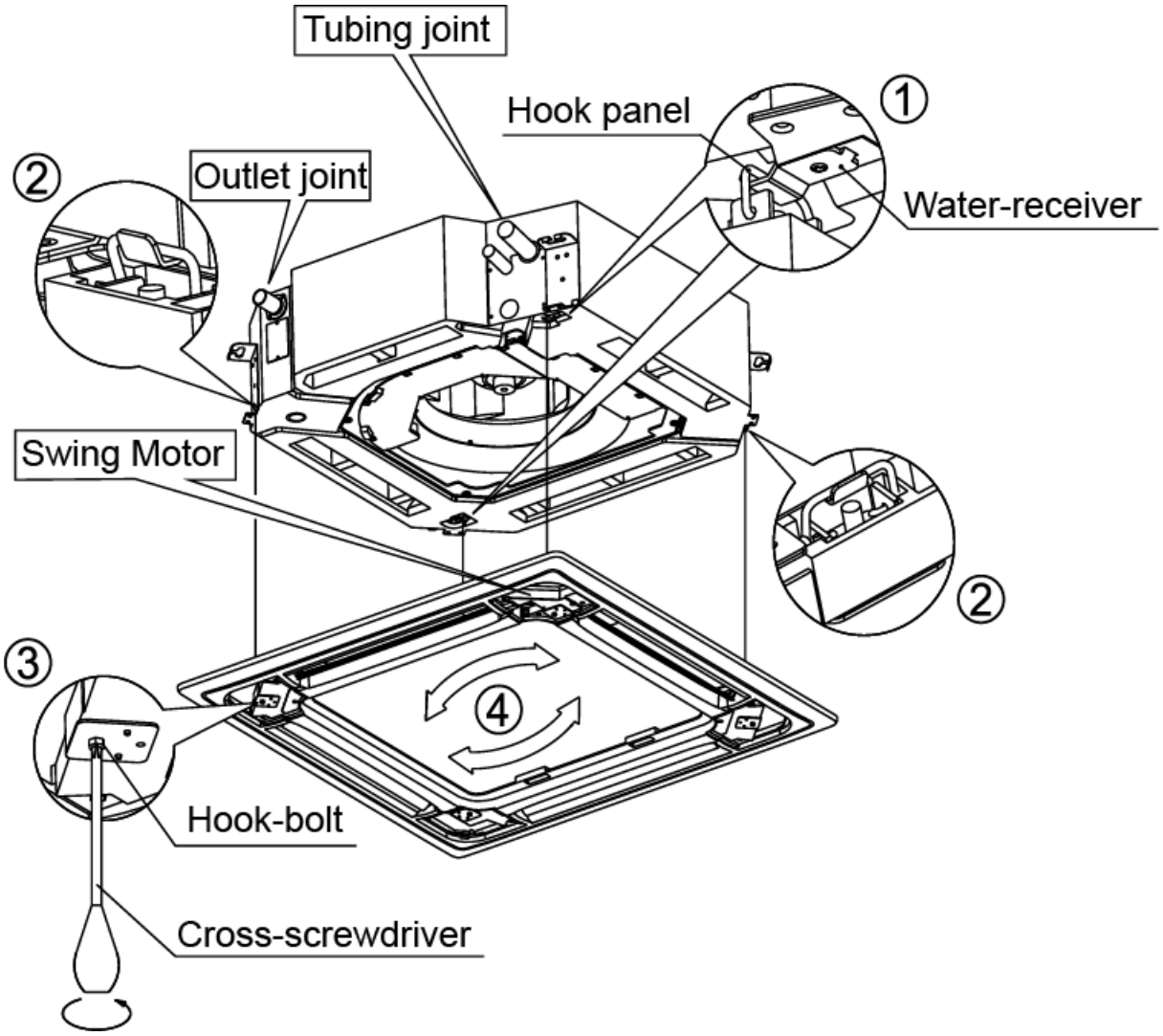

Tighten the screws under the panel hooks till the panel closely stick on the ceiling to avoid condensate water.

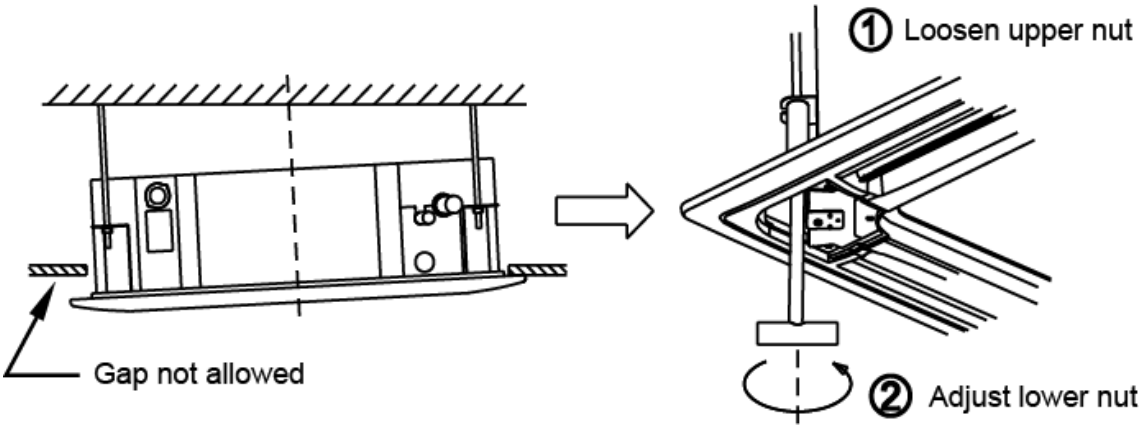

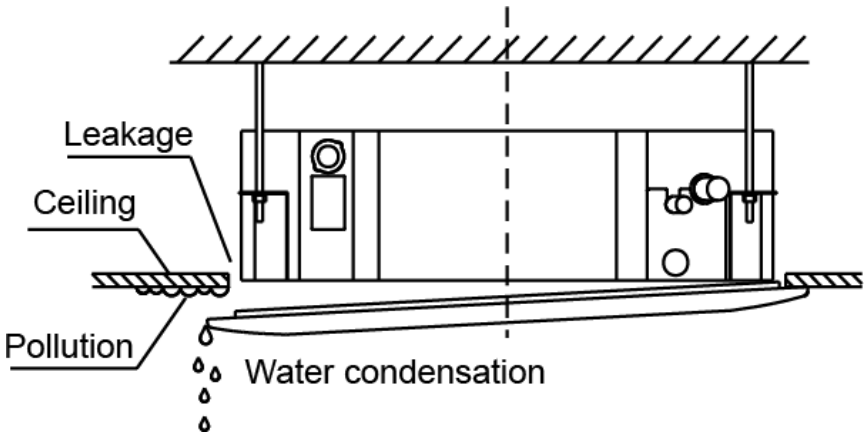

Hang the air-in grill to the panel, then connect the lead terminator of the swing motor and that of the control box with corresponding terminators on the body respectively.

Install the 4 corner covers back.

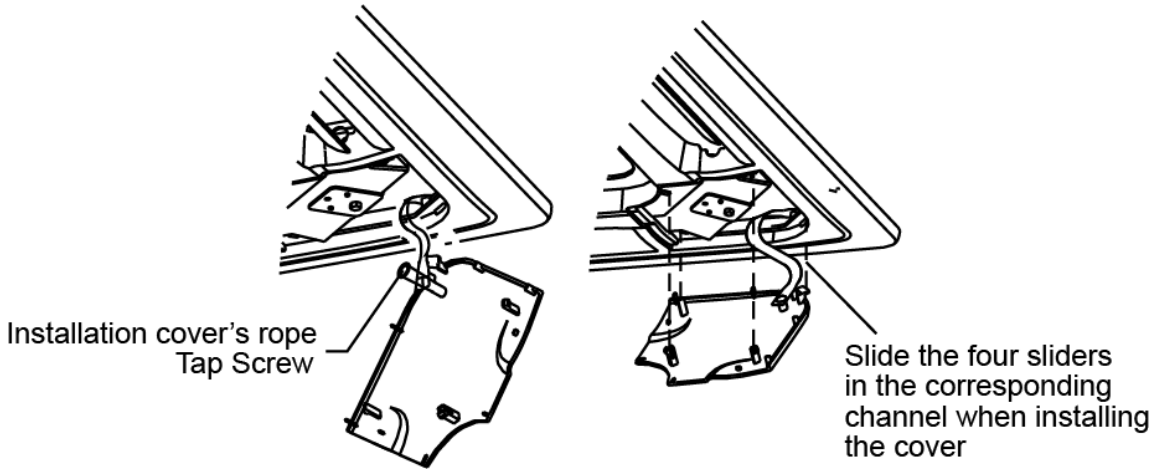

Note: The panel shall be installed after the wiring connected.

3.2 Ceiling & floor indoor unit installation

3.2.1 Service space for indoor unit

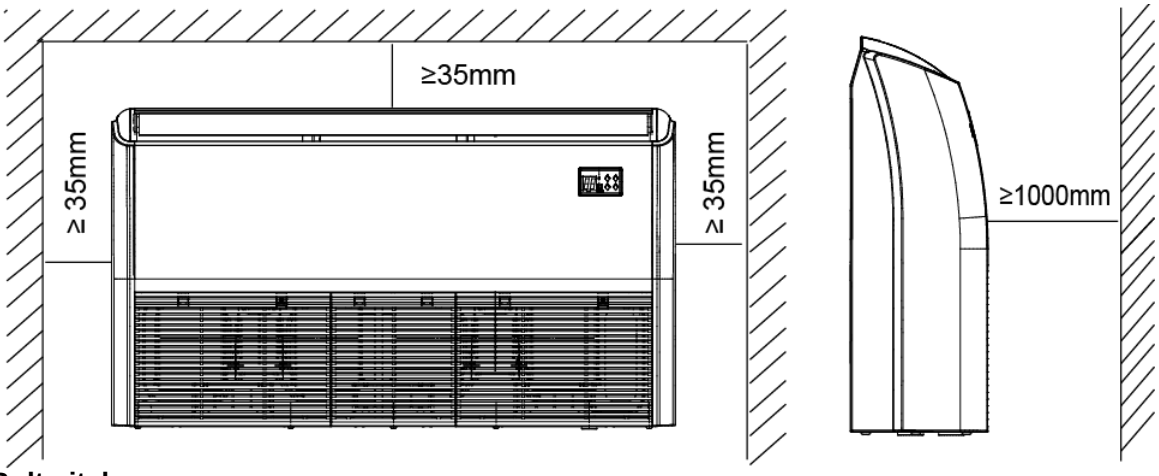

3.2.2 Bolt pitch

① Ceiling installation

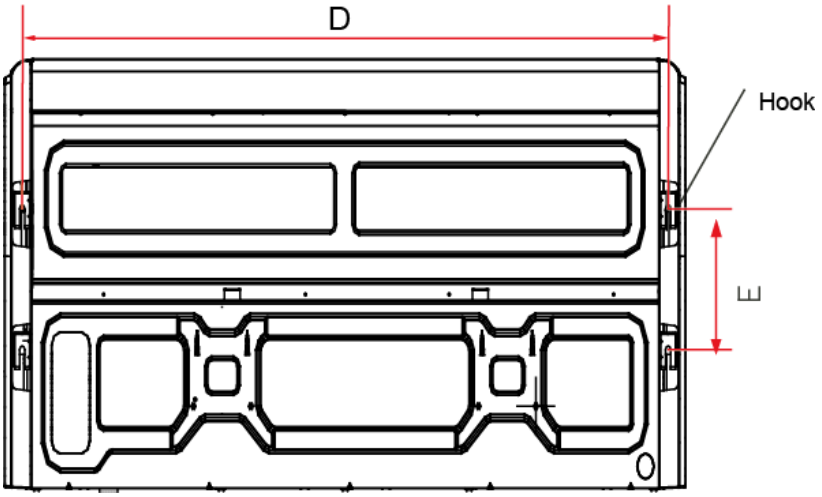

Capacity (KBtu/h)	D	E
18/24	983	220
36~55	1565	220

② Wall-mounted installation

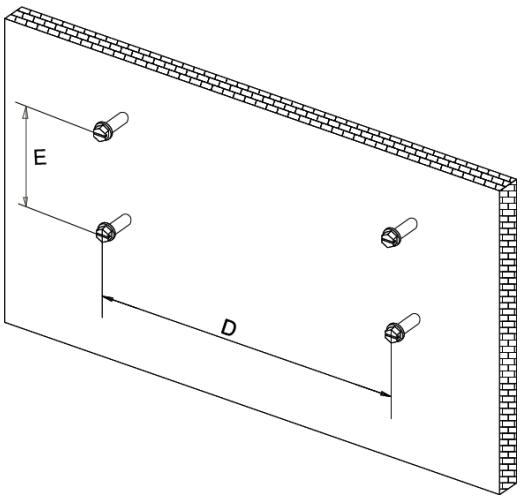

3.2.3 Install the pendant bolt

① Ceiling installation

Select the position of installation hooks according to the hook holes positions showed in upper picture.

Drill four holes of Ø12mm, 45~50mm deep at the selected positions on the ceiling. Then embed the expansible hooks (fittings).

② Wall-mounted installation
Install the tapping screws onto the wall.(Refer to picture below)

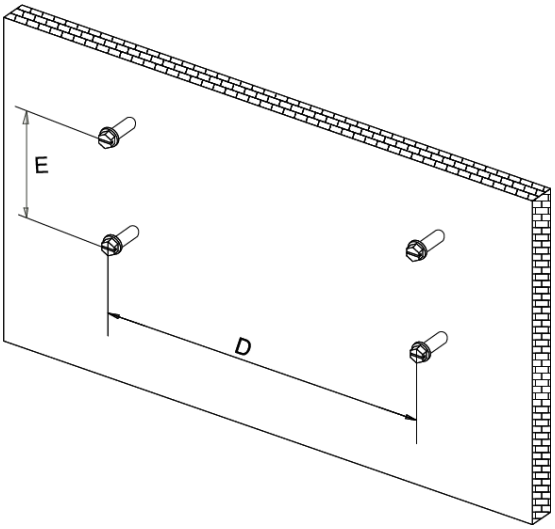

3.2.4 Install the main body

① Ceiling installation (The only installation method for the unit with drain pump)
Remove the side board and the grille.

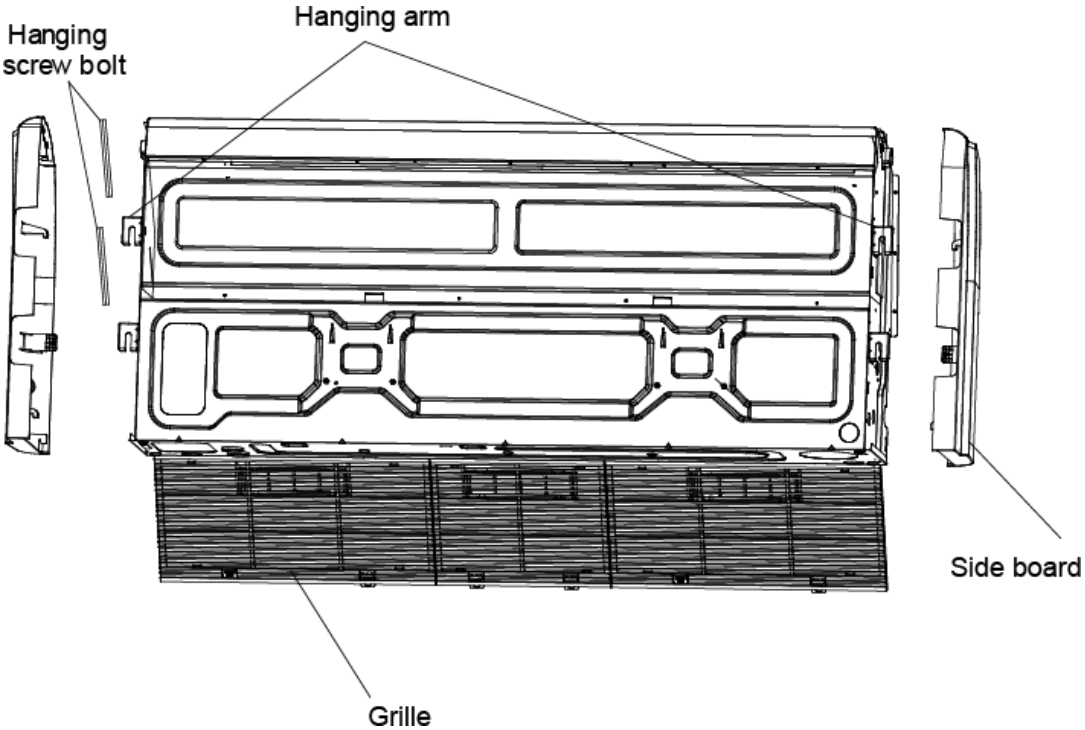

Locate the hanging arm on the hanging screw bolt. Prepare the mounting bolts on the unit.

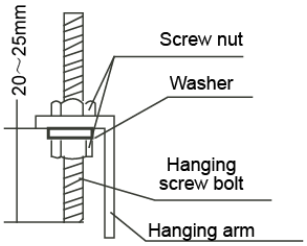

Put the side panels and grilles back.

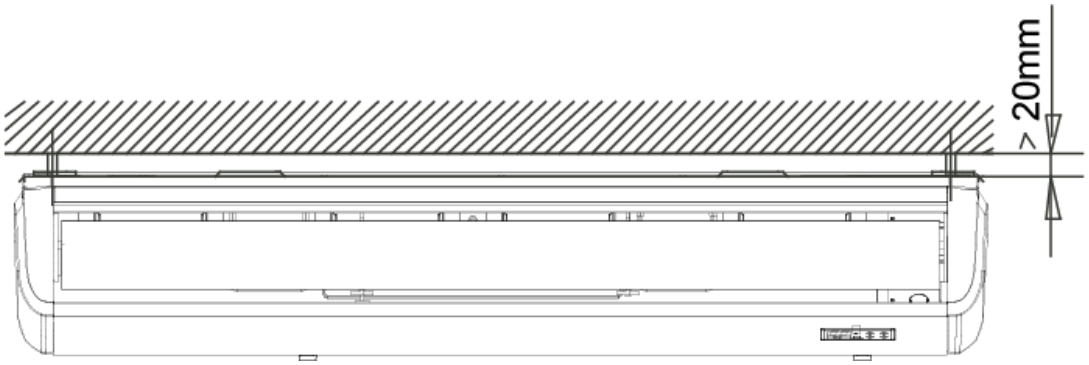

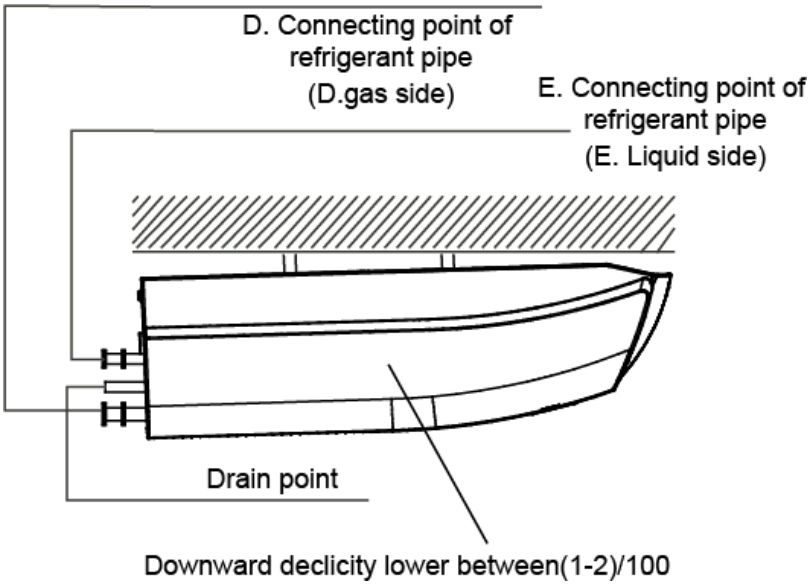

② Wall-mounted installation

Hang the indoor unit by insert the tapping screws into the hanging arms on the main unit. (The bottom of body can touch with floor or suspended, but the body must install vertically.)

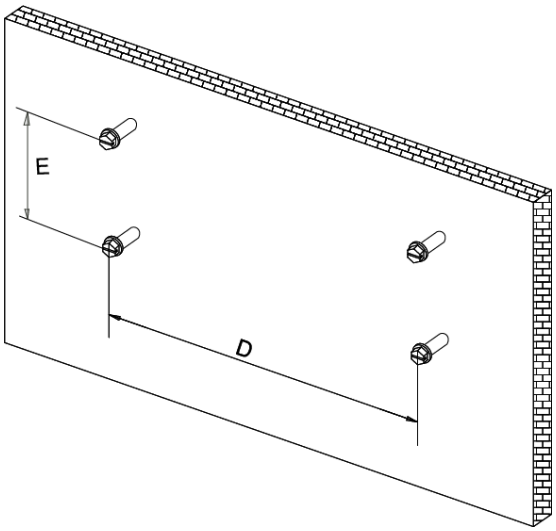

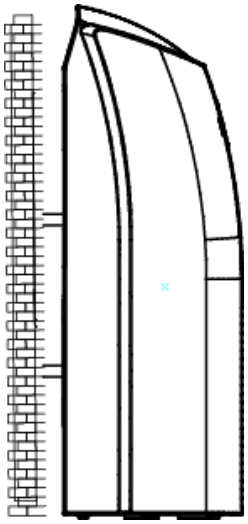

3.3 A6 duct indoor unit installation

3.3.1 Service space for indoor unit

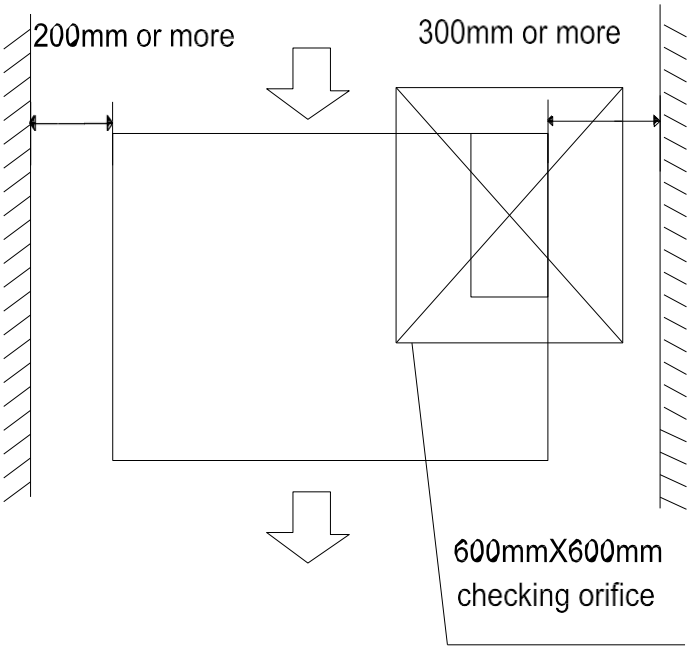

3.3.2 Bolt pitch

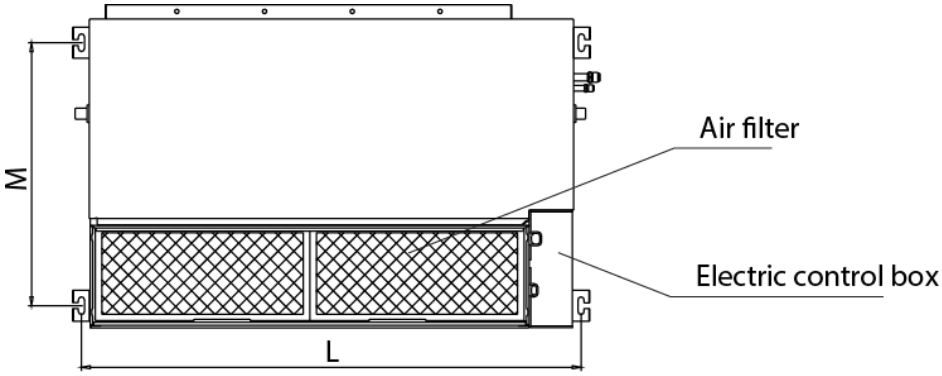

Capacity(KBtu)	Size of outline dimension mounted lug	
	L	M
18	920	508
24	1140	598
30~36	1400	598
42~55	1240	697

3.3.3 Hang indoor unit

1. Please refer to the upper data to locate the four positioning screw bolt hole on the ceiling. Be sure to mark the areas where ceiling hook holes will be drilled.
2. Install and fit pipes and wires after you have finished installing the main body. When choosing where to start, determine the direction of the pipes to be drawn out. Especially in cases where there is a ceiling involved, align the refrigerant pipes, drain pipes, and indoor and outdoor lines with their connection points before mounting the unit.
3. Install hanging screw bolts.
   - Cut off the roof beam.
   - Strengthen the place that has been cut off, and consolidate the roof beam.

4. After you select an installation location, align the refrigerant pipes, drain pipes, as well as indoor and outdoor wires with their connection points before mounting the unit.
5. Drill 4 holes 10cm (4”) deep at the ceiling hook positions in the internal ceiling. Be sure to hold the drill at a 90° angle to the ceiling.
6. Secure the bolt using the washers and nuts provided.
7. Install the four suspension bolts.
8. Mount the indoor unit with at least two people to lift and secure it. Insert suspension bolts into the unit’s hanging holes. Fasten them using the washers and nuts provided.

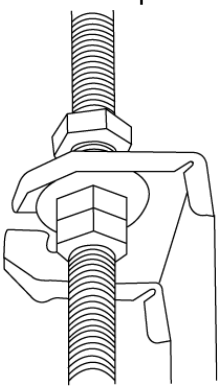

9. Mount the indoor unit onto the hanging screw bolts with a block. Position the indoor unit flat using a level indicator to prevent leaks.

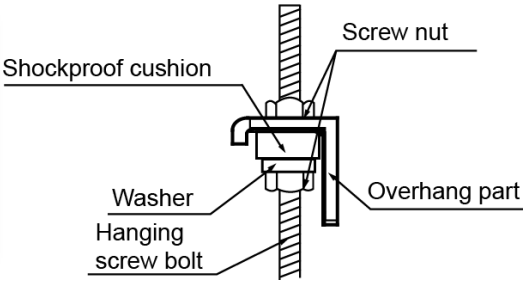

Note: Confirm the minimum drain tilt is 1/100 or more.

3.3.4 Duct and accessories installation

1. Install the filter (optional) according to the size of the air inlet.
2. Install the canvas tie-in between the body and the duct.
3. Air inlet and air outlet duct should be apart far enough to avoid air passage short-circuit.
4. Connect the duct according to the following diagram.

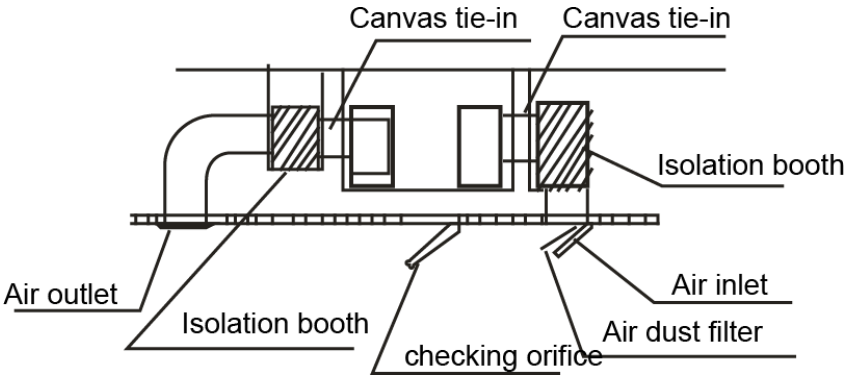

5.Please refer to the following static pressure to install..

Model(KBtu/h)	Static Pressure(Pa)
18	0-100
24~55	0-160

Change the fan motor static pressure corresponding to external duct static pressure.
NOTE: 1.Do not put the connecting duct weight on the indoor unit.
2. When connecting duct, use inflammable canvas tie-in to prevent vibrating.
3. Insulation foam must be wrapped outside the duct to avoid condensate. An internal duct underlayer can be added to reduce noise, if the end-user requires.

3.3.5 Adjust the air inlet direction(From rear side to under-side.)

① Take off ventilation panel and flange, cut off the staples at side rail

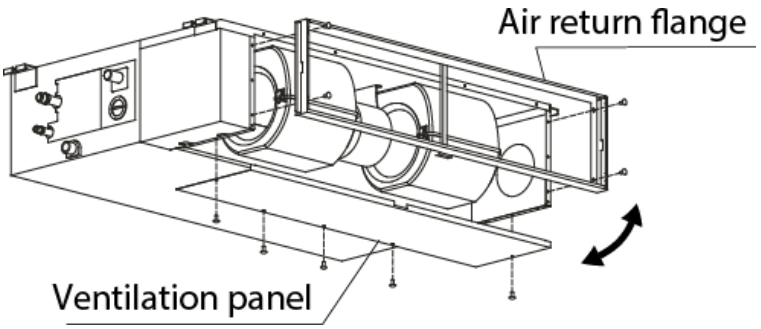

② Change the mounting positions of ventilation panel and air return flange .

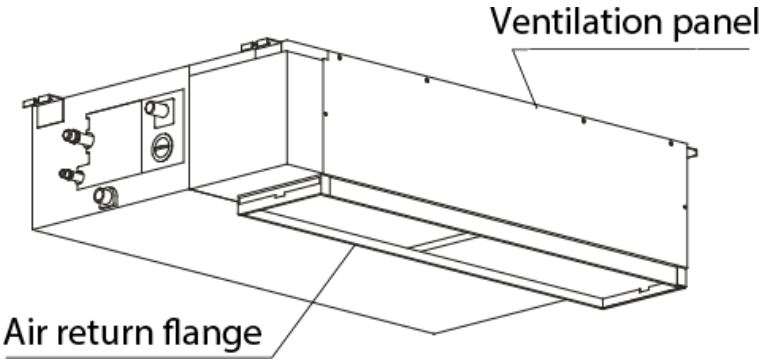

③ When installing the filter mesh, fit it into the flange as illustrated in the following figure.

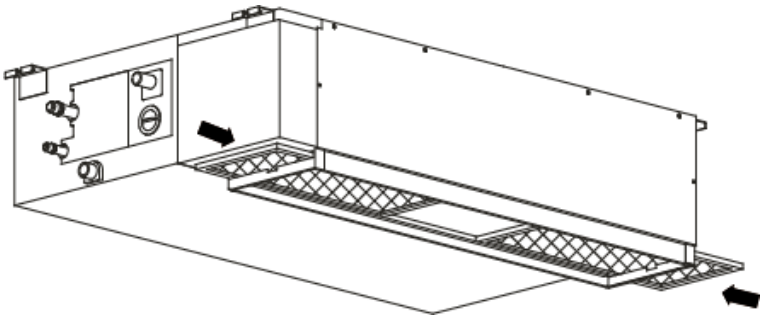

NOTE: All the figures in this manual are for explanation purpose only. They may be slightly different from the air conditioner you purchased.

3.4 Compact cassette indoor unit installation

3.4.1 Service space for indoor unit

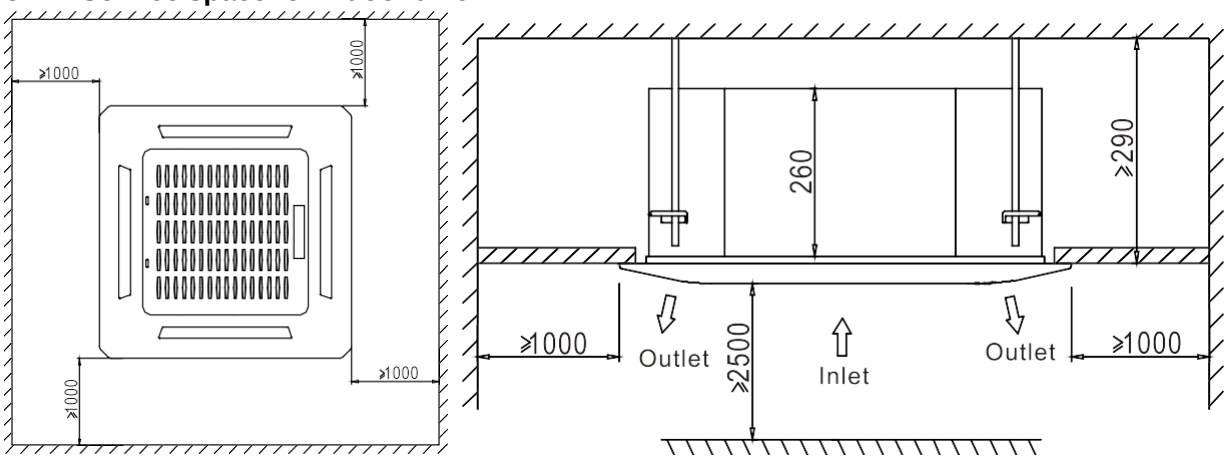

3.4.2 Bolt pitch

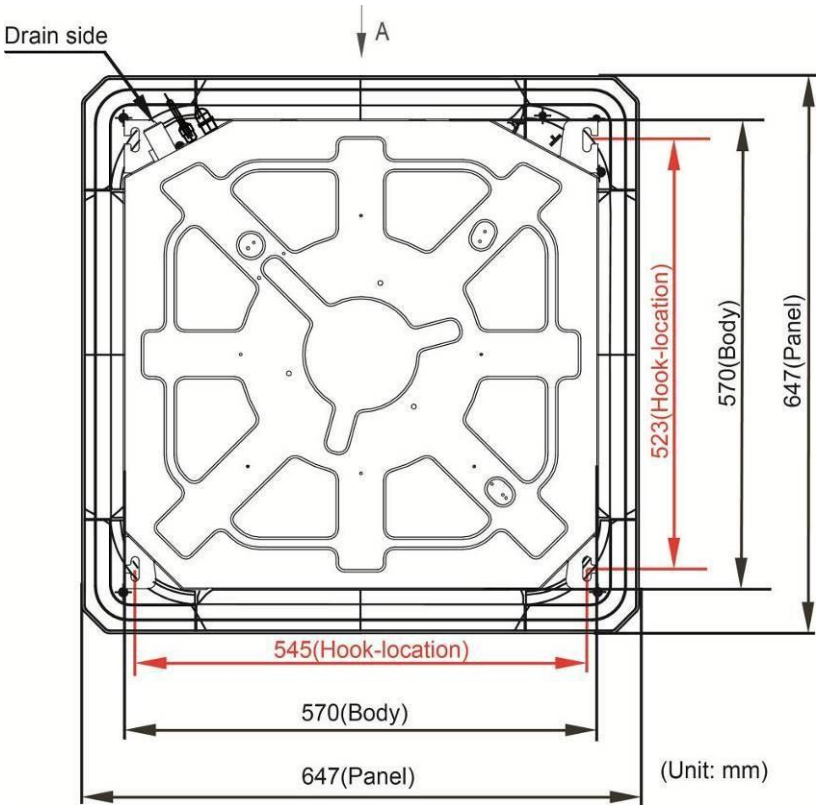

3.4.3 Install the pendant bolt

Select the position of installation hooks according to the hook holes positions showed in upper picture. Drill four holes of Ø12mm, 45~50mm deep at the selected positions on the ceiling. Then embed the expansible hooks (fittings).

Face the concave side of the installation hooks toward the expansible hooks. Determine the length of the installation hooks from the height of ceiling, then cut off the unnecessary part.

If the ceiling is extremely high, please determine the length of the installation hook depending on the real situation.

3.4.4 Install the main body

Make the 4 suspender through the 4 hanger of the main body to suspend it. Adjust the hexangular nuts on the four installation hooks evenly, to ensure the balance of the body. Use a leveling instrument to make sure the levelness of the main body is within ±1°.

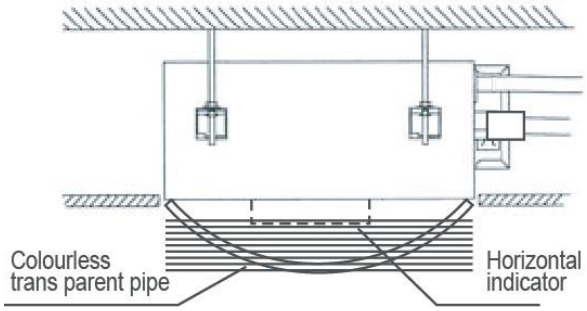

Adjust the position to ensure the gaps between the body and the four sides of ceiling are even. The body's lower part should sink into the ceiling for 10~12 mm. In general, L is half of the screw length of the installation hook.

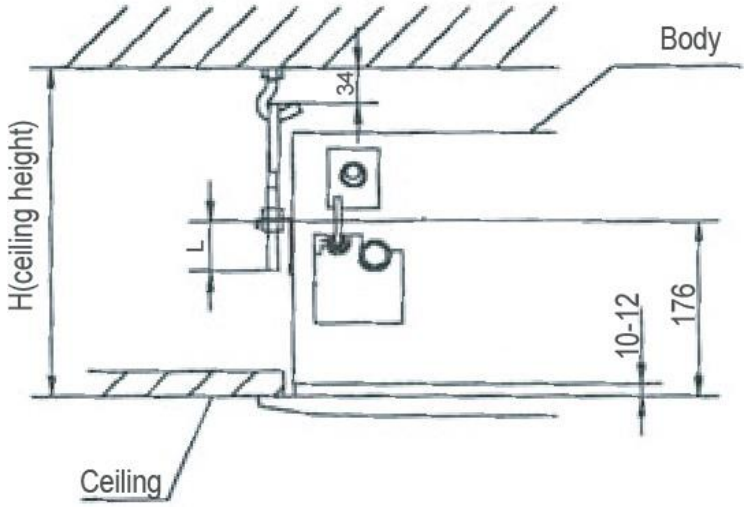

Locate the air conditioner firmly by wrenching the nuts after having adjusted the body's position well.

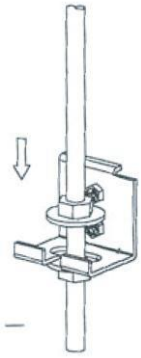

3.4.5 Install the panel

Remove the grille

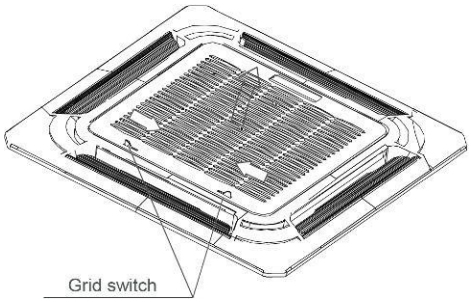

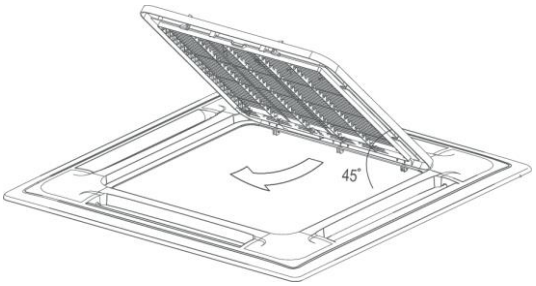

Hang the panel to the hooks on the mainbody.

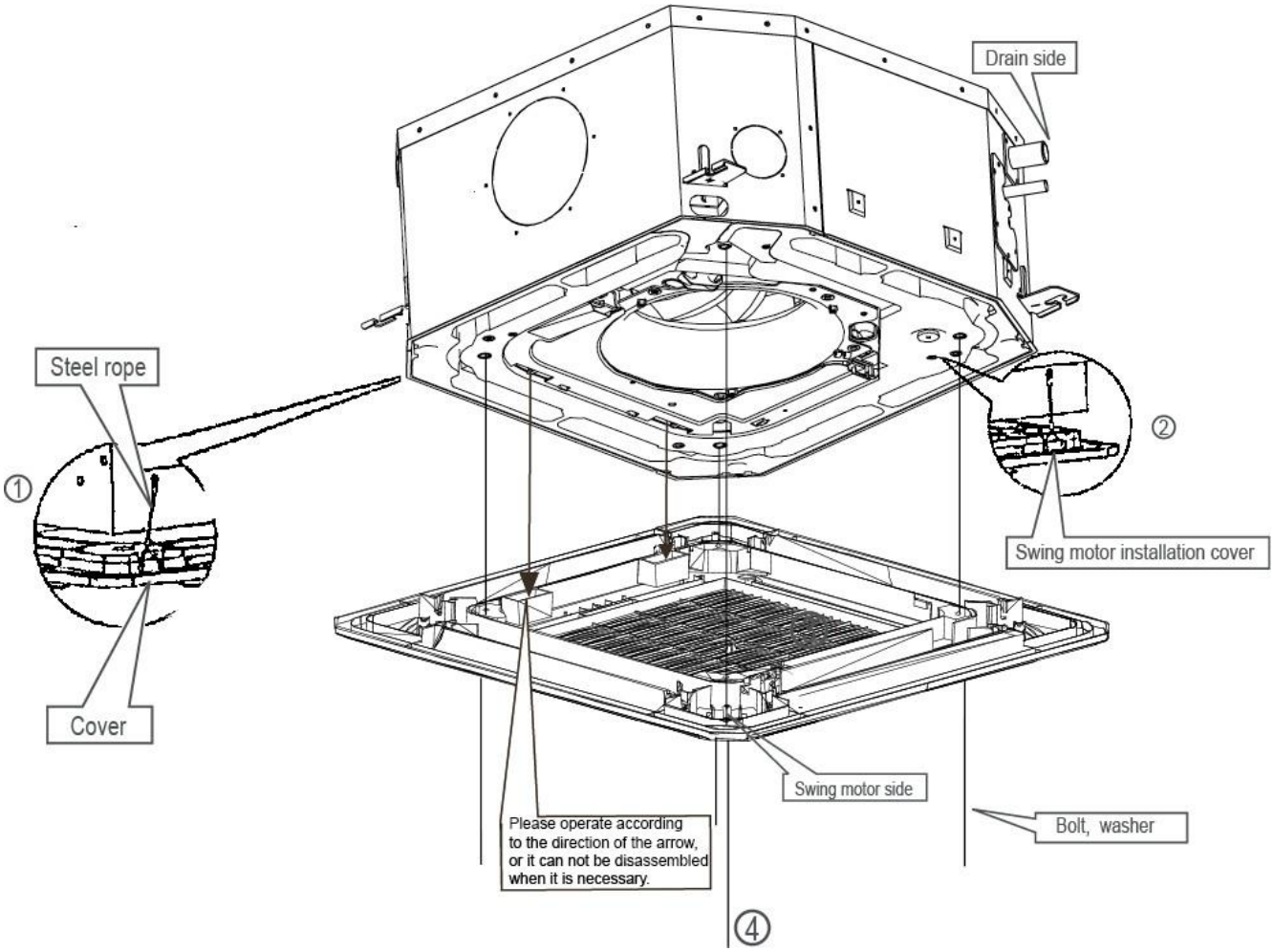

Tighten the screws under the panel hooks till the panel closely stick on the ceiling to avoid condensate water.

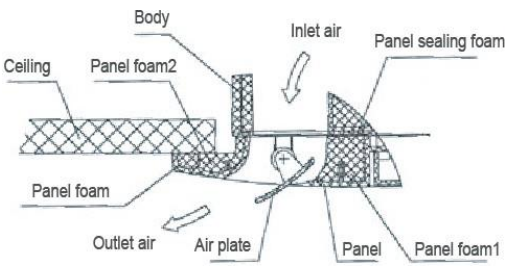

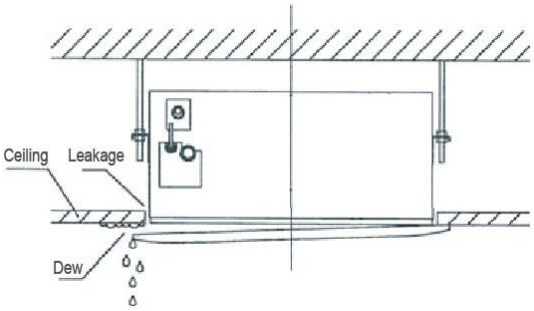

Hang the air-in grill to the panel, then connect the lead terminator of the swing motor and that of the control box with corresponding terminators on the body respectively.

Note: The panel shall be installed after the wiring connected.

4. Outdoor unit installation (Side Discharge Unit)

4.1 Service space for outdoor unit

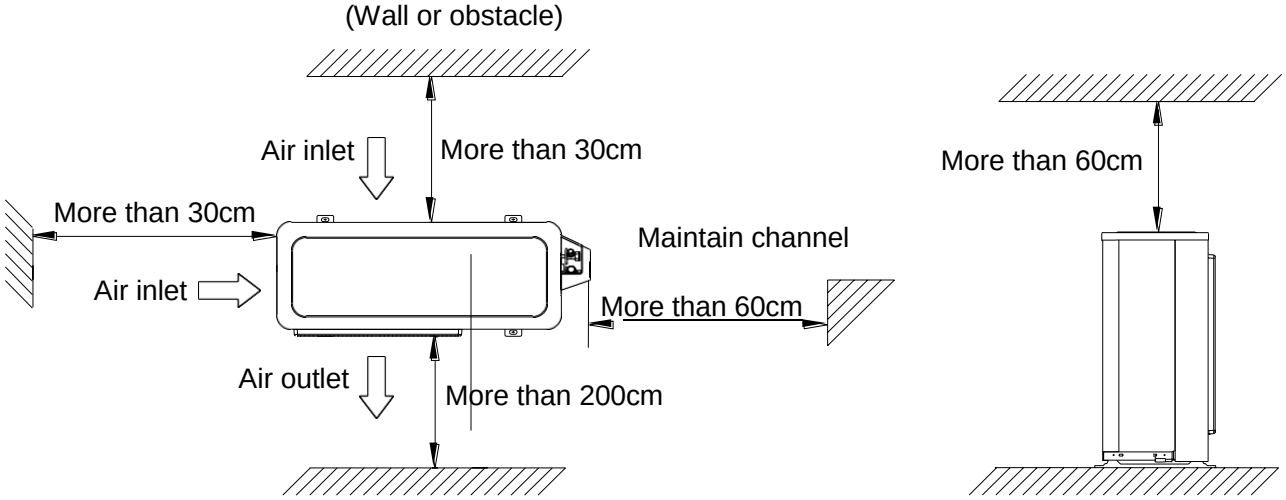

4.2 Bolt pitch

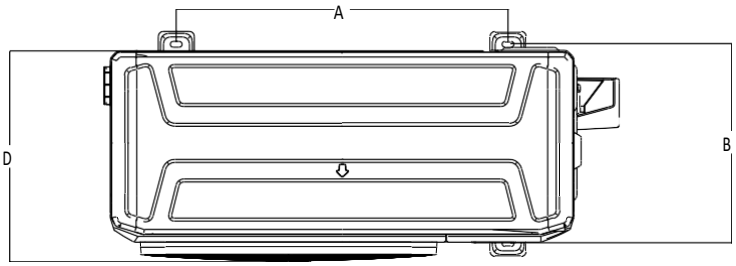

Model	A	B	D
12/18	514	340	333
24	540	350	363
30~42	673	403	410
48~55	634	404	415

4.3 Install the Unit

Since the gravity center of the unit is not at its physical center, so please be careful when lifting it with a sling.
Never hold the inlet of the outdoor unit to prevent it from deforming.
Do not touch the fan with hands or other objects.
Do not lean it more than 45, and do not lay it sidelong.
Make concrete foundation according to the specifications of the outdoor units.
Fasten the feet of this unit with bolts firmly to prevent it from collapsing in case of earthquake or strong wind.

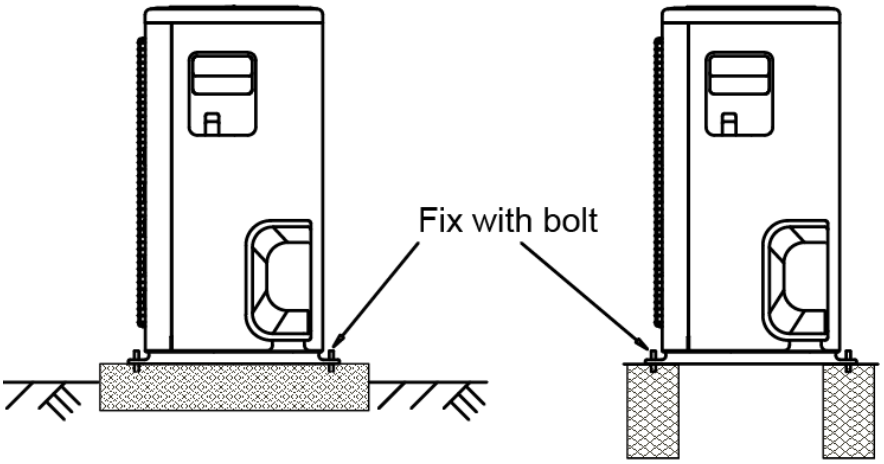

5. Refrigerant pipe installation

5.1 Maximum pipe length and height drop

Considering the allowable pipe length and height drop to decide the installation position. Make sure the distance and height drop between indoor and outdoor unit not exceeded the date in the following table.

Model	Max. Length	Max. Elevation
12,000Btu/h	25m	10m
16,000~18,000Btu/h	30m	20m
24,000Btu/h~30,000Btu/h	50m	25m
36,000Btu/h ~60,000Btu/h	65m	30m

5.2 The procedure of connecting pipes

5.2.1 Choose the pipe size according to the specification table.

5.2.2 Confirm the cross way of the pipes.

5.2.3 Measure the necessary pipe length.

5.2.4 Cut the selected pipe with pipe cutter

- Make the section flat and smooth.

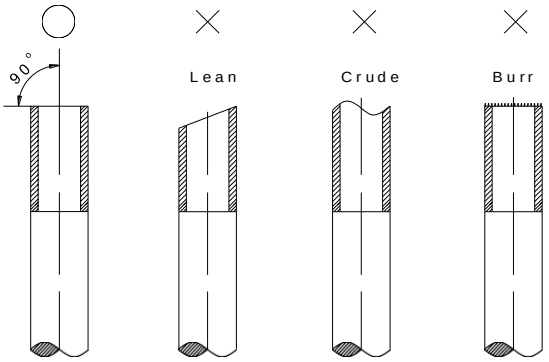

5.2.5 Insulate the copper pipe

- Before test operation, the joint parts should not be heat insulated.

5.2.6 Flare the pipe

- Insert a flare nut into the pipe before flaring the pipe
- According to the following table to flare the pipe

Pipe diameter	Flare dimension A (mm)		Flare shape
	Min	Max	
1/4" (6.35)	8.3	8.7	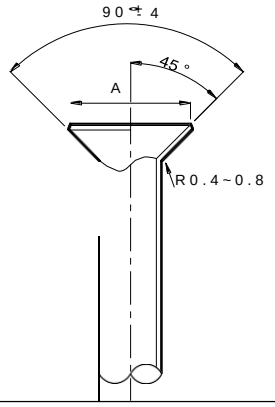
3/8" (9.52)	12.0	12.4	
1/2" (12.7)	15.4	15.8	
5/8" (15.9)	18.6	19.1	
3/4" (19)	22.9	23.3	

- After flared the pipe, the opening part must be seal by end cover or adhesive tape to avoid duct or exogenous impurity come into the pipe.

5.2.7 Drill holes if the pipes need to pass the wall.

5.2.8 According to the field condition to bend the pipes so that it can pass the wall smoothly.

5.2.9 Bind and wrap the wire together with the insulated pipe if necessary.

5.2.10 Set the wall conduit

5.2.11 Set the supporter for the pipe.

5.2.12 Locate the pipe and fix it by supporter

- For horizontal refrigerant pipe, the distance between supporters should not be exceed 1m.
- For vertical refrigerant pipe, the distance between supporters should not be exceed 1.5m.

5.2.13 Connect the pipe to indoor unit and outdoor unit by using two spanners.

- Be sure to use two spanners and proper torque to fasten the nut, too large torque will damage the bellmouthing, and too small torque may cause leakage. Refer the following table for different pipe connection.

Pipe Diameter	Torque		Sketch map
	(kgf.cm)	(N.cm)	
1/4" (6.35)	144~176	1420~1720	
3/8" (9.52)	333~407	3270~3990	
1/2" (12.7)	504~616	4950~6030	
5/8" (15.9)	630~770	6180~7540	
3/4" (19)	990~1210	9270~11860	

5.3 For Units with Twins Function

5.3.1 Length and drop height permitted of the refrigerant piping

Note: Reduced length of the branching tube is the 0.5m of the equivalent length of the pipe.

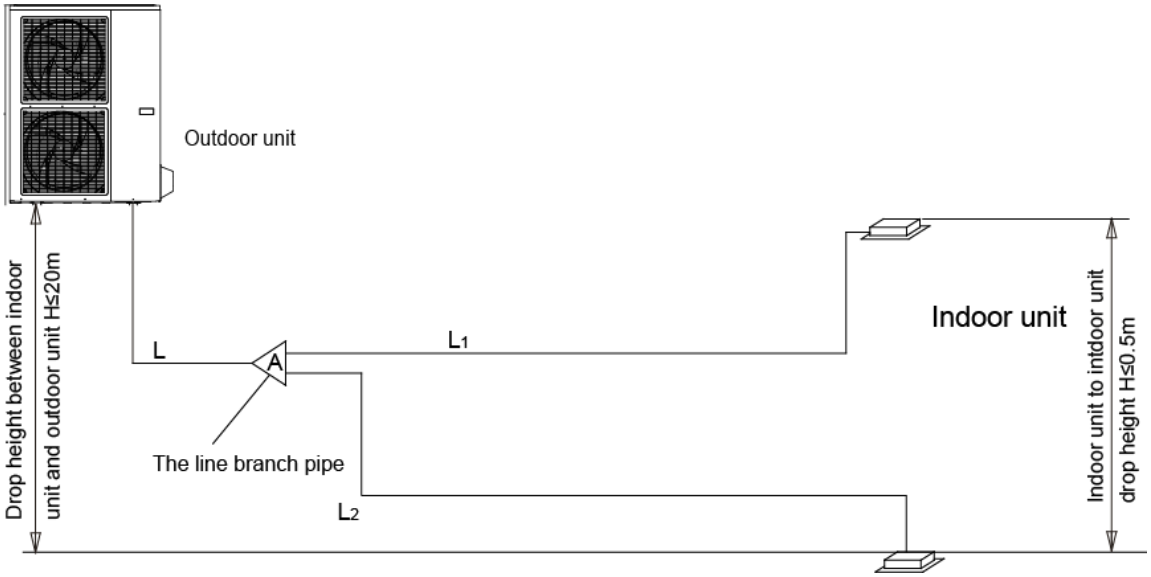

Note: All used branch pipe must be produced by Midea, otherwise it causes malfunction. The indoor units should be installed equivalently at the both side of the U type branch pipe.

		Permitted Value		Piping
Pipe Length	Total pipe length (Actual)	18K+18K	30m	L+L1+L2
		24K+24K	50m	
		30K+30K	50m	
	Max. branch pipe length		15m	L1, L2
	Max. branch pipe length difference		10m	L1-L2
Drop Height	Max. height difference between indoor unit and outdoor unit		20m	H1
	Max. height difference between indoor units		0.5m	H2

5.3.2 Size of joint pipes for indoor unit

Capacity of indoor unit (A)	Size of main pipe(mm)		
	Gas side	Liquid side	Available branching pipe
18K	Φ12.7	Φ6.35	CE-FQZHN-01C
24K	Φ15.9	Φ9.5	CE-FQZHN-01C
30K	Φ15.9	Φ9.5	CE-FQZHN-01C

5.3.3 Size of joint pipes for outdoor unit

Model	the size of main pipe(mm)		
	Gas side	Liquid side	The 1st branching pipe
36K	Φ15.9	Φ9.5	CE-FQZHN-01C
48K	Φ15.9	Φ9.5	CE-FQZHN-01C
60K	Φ15.9	Φ9.5	CE-FQZHN-01C

5.3.4 The branching pipe must be installed horizontally, error angle of it should not large than 10°. Otherwise, malfunction will be caused.

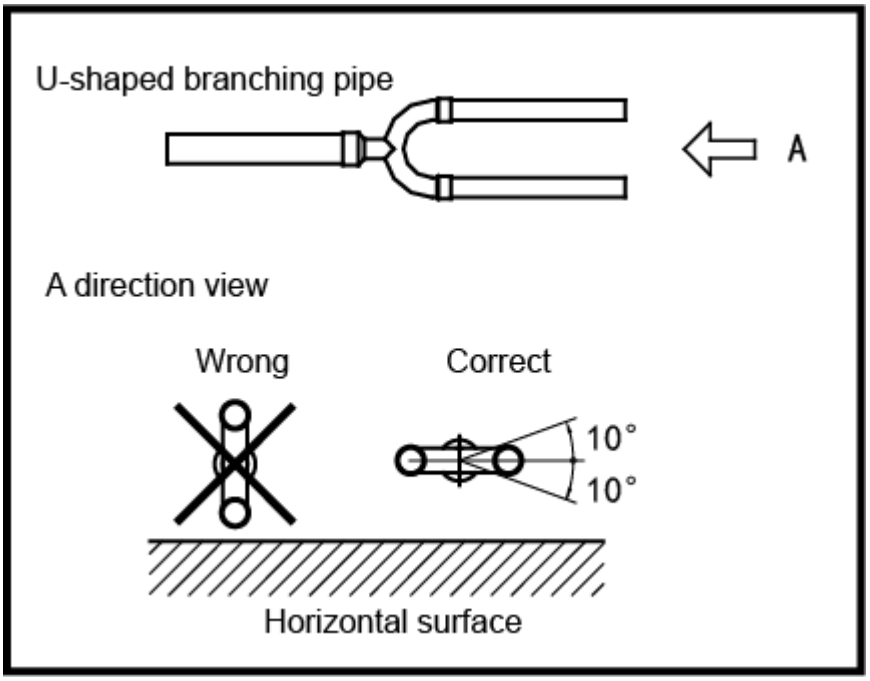
U-shaped branching pipe
A
A direction view
Wrong
Correct
10°
10°
Horizontal surface

6. Drainage pipe installation

Install the drainage pipe as shown below and take measures against condensation. Improperly installation could lead to leakage and eventually wet furniture and belongings.

6.1 Installation principle

- Ensure at least 1/100 slope of the drainage pipe
- Adopt suitable pipe diameter
- Adopt nearby condensate water discharge

6.2 Key points of drainage water pipe installation

6.2.1 Considering the pipeline route and elevation

- Before installing condensate water pipeline, determine its route and elevation to avoid intersection with other pipelines and ensure slope is straight.

6.2.2 Drainage pipe selection

- The drainage pipe diameter shall not small than the drain hose of indoor unit
- According to the water flowrate and drainage pipe slope to choose the suitable pipe, the water flowrate is decided by the capacity of indoor unit.

Relationship between water flowrate and capacity of indoor unit

Capacity (x1000Btu)	Water flowrate (l/h)
12	2.4
18	4
24	6
30	7
36	8
42	10
48	12
60	14

According to the above table to calculate the total water flowrate for the confluence pipe selection.

For horizontal drainage pipe (The following table is for reference)

PVC pipe	Reference value of inner diameter of pipe (mm)	Allowable maximum water flowrate (l/h)		Remark
		Slope 1/50	Slope 1/100	
PVC25	20	39	27	For branch pipe
PVC32	25	70	50	
PVC40	31	125	88	Could be used for confluence pipe
PVC50	40	247	175	
PVC63	51	473	334	

Attention: Adopt PVC40 or bigger pipe to be the main pipe.

For Vertical drainage pipe (The following table is for reference)

PVC pipe	Reference value of inner diameter of pipe (mm)	Allowable maximum water flowrate (l/h)	Remark
PVC25	20	220	For branch pipe
PVC32	25	410	
PVC40	31	730	Could be used for confluence pipe
PVC50	40	1440	
PVC63	51	2760	
PVC75	67	5710	
PVC90	77	8280	

Attention: Adopt PVC40 or bigger pipe to be the main pipe.

6.2.3 Individual design of drainage pipe system

- The drainage pipe of air conditioner shall be installed separately with other sewage pipe, rainwater pipe and drainage pipe in building.
- The drainage pipe of the indoor unit with water pump should be apart from the one without water pump.

6.2.4 Supporter gap of drainage pipe

- In general, the supporter gap of the drainage pipe horizontal pipe and vertical pipe is respectively 1m~1.5m and 1.5m~2.0m.
- Each vertical pipe shall be equipped with not less than two hangers.
- Overlarge hanger gap for horizontal pipe shall create bending, thus leading to air block.

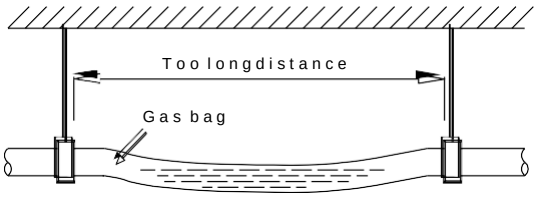

6.2.5 The horizontal pipe layout should avoid converse flow or bad flow

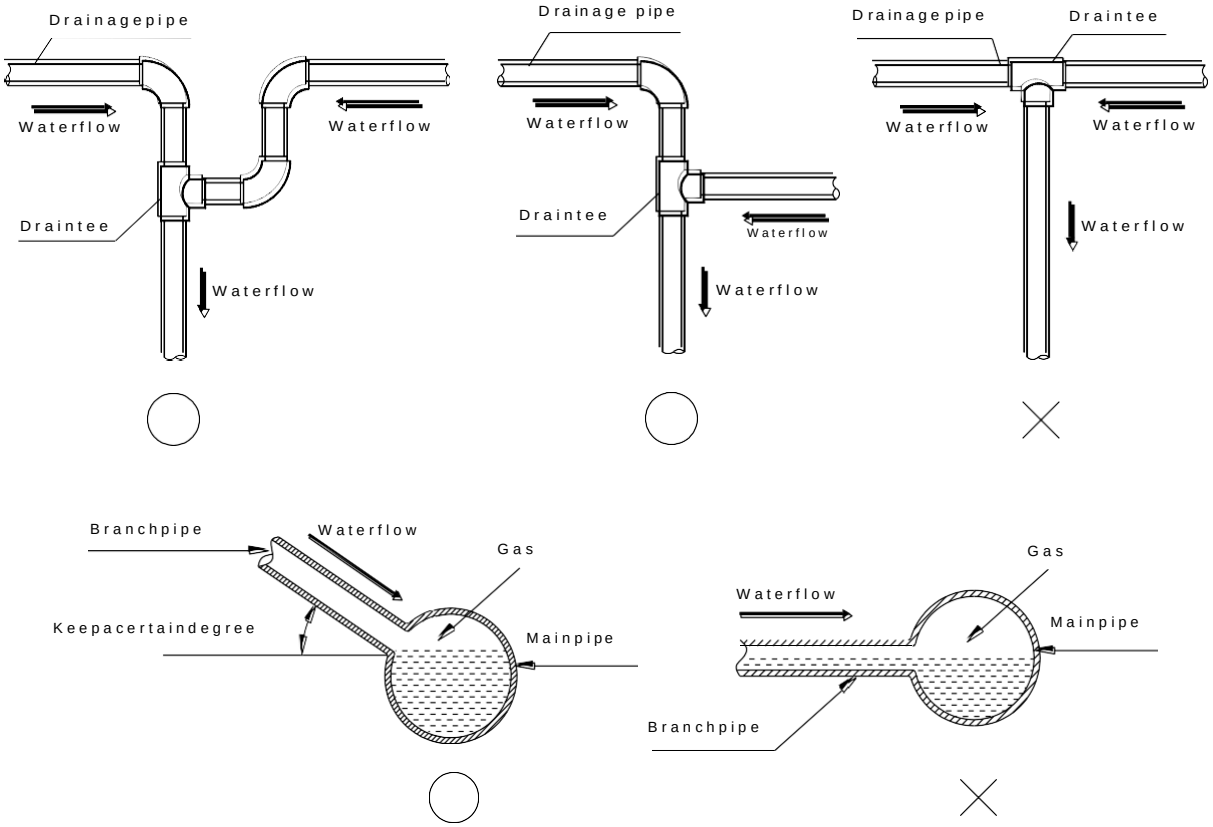

- The correct installation will not cause converse water flow and the slope of the branch pipes can be adjusted freely
- The false installation will cause converse water flow and the slope of the branch pipe can not be adjusted.

6.2.6 Water storage pipe setting

- If the indoor unit has high extra static pressure and without water pump to elevate the condensate water, such as high extra static pressure duct unit , the water storage pipe should be set to avoid converse flow or blow water phenomena.

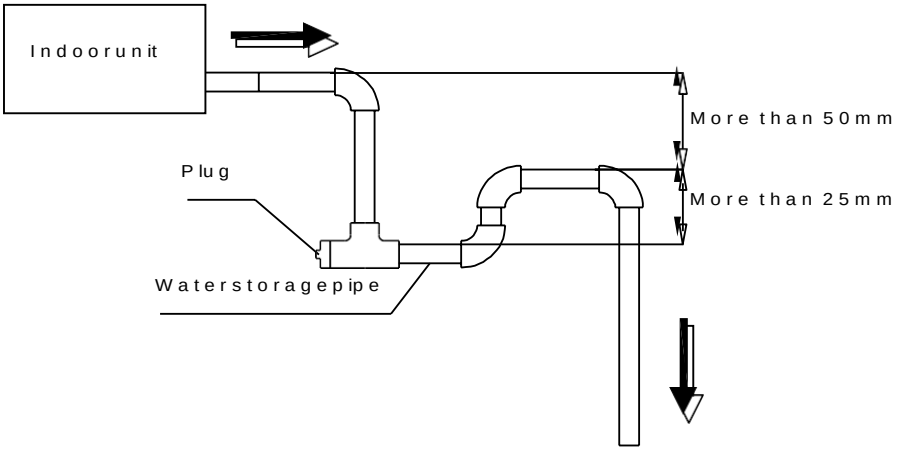

6.2.7 Lifting pipe setting of indoor unit with water pump

- The length of lifting pipe should not exceed the pump head of indoor unit water pump.
  Pump head of big four way cassette: 750mm
  Pump head of compact four way cassette: 500mm
- The drainage pipe should be set down inclined after the lifting pipe immediately to avoid wrong operation of water level switch.
- Refer the following picture for installation reference.

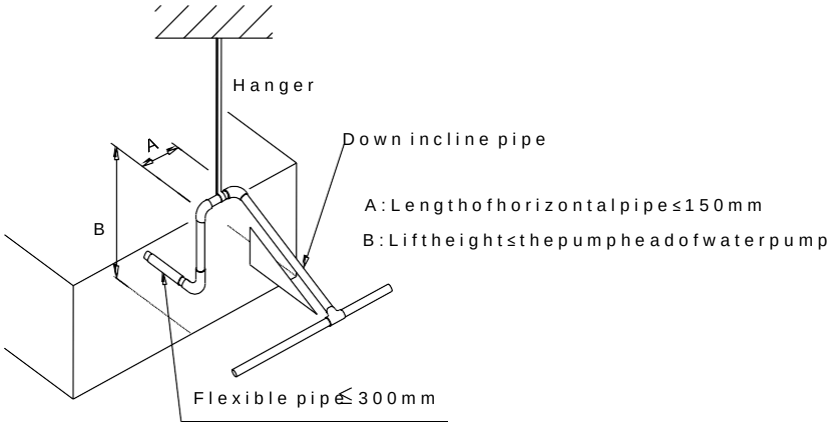

6.2.8 Blowhole setting

- For the concentrated drainage pipe system, there should design a blowhole at the highest point of main pipe to ensure the condensate water discharge smoothly.
- The air outlet shall face down to prevent dirt entering pipe.
- Each indoor unit of the system should be installed it.
- The installation should be considering the convenience for future cleaning.

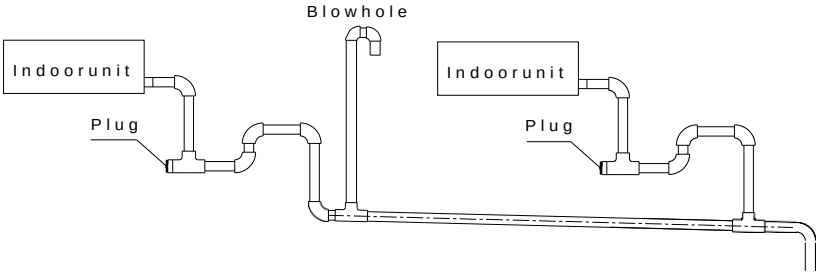

6.2.9 The end of drainage pipe shall not contact with ground directly.

6.3 Drainage test

6.3.1 Water leakage test

After finishing the construction of drainage pipe system, fill the pipe with water and keep it for 24 hours to check whether there is leakage at joint section.

6.3.2 Water discharge test

1. Natural drainage mode(the indoor unit with outdoor drainage pump)
   Infuse above 600ml water through water test hole slowly into the water collector, observe whether the water can discharge through the transparent hard pipe at drainage outlet.
2. Pump drainage mode

2.1 Disconnect the plug of water level switch, remove the cover of water test hole and slowly infuse about 2000ml water through the water test hole, be sure that the water will not touch the motor of drainage pump.

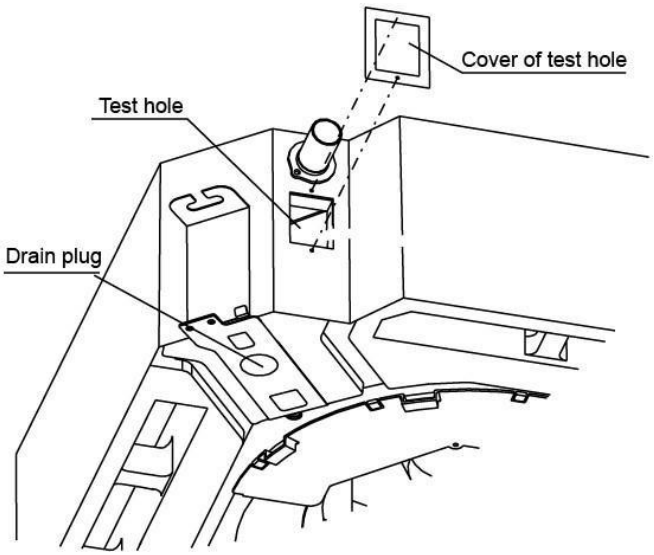

2.2 Power on and let the air conditioner operate for cooling. Check operation status of drainage pump, and then connect the plug of water level switch, check the operation sound of water pump and observe whether the water can discharge through the transparent hard pipe at drainage outlet. (In light of the length of drainage pipe, water shall be discharged about 1 minute delayed)

2.3 Stop the operation of air conditioner, power off the power supply and put the cover of water test hole back to the original place.

a. After stopped the air conditioner 3 minutes, check whether there is anything abnormal. If drainage pipes have not been distributed properly, over back-flow water shall cause the flashing of alarm indicator at remote-controlled receiving board and even water shall run over the water collector.

b. Continuously infusing water until water level alarmed, check whether the drainage pump could discharge water at once. If water level does not decline under warning water level 3 minutes later, it shall cause shutdown of unit. When this situation happens, the normal startup only can be recovered by turning down power supply and eliminating accumulated water.

Note: Drain plug at the main water-containing plate is used for eliminating accumulated water in water-containing plate when maintaining air conditioner fault. During normal operation, the plug shall be filled in to prevent leakage.

6.4 Insulation work of drainage pipe

Refer the introduction to the insulation engineering parts.

7. Vacuum Drying and Leakage Checking

4.1 Purpose of vacuum drying

- Eliminating moisture in system to prevent the phenomena of ice-blockage and copper oxidation. Ice-blockage shall cause abnormal operation of system, while copper oxide shall damage compressor.
- Eliminating the non-condensable gas (air) in system to prevent the components oxidizing, pressure fluctuation and bad heat exchange during the operation of system.

4.2 Selection of vacuum pump

- The ultimate vacuum degree of vacuum pump shall be -756mmHg or above.
- Precision of vacuum pump shall reach 0.02mmHg or above.

4.3 Operation procedure for vacuum drying

Due to different construction environment, two kinds of vacuum drying ways could be chosen, namely ordinary vacuum drying and special vacuum drying.

7.3.1 Ordinary vacuum drying

1. When conduct first vacuum drying, connect pressure gauge to the infusing mouth of gas pipe and liquid pipe, and keep vacuum pump running for 1hour (vacuum degree of vacuum pump shall be reached -755mmHg).
2 If the vacuum degree of vacuum pump could not reach -755mmHg after 1 hour of drying, it indicates that there is moisture or leakage in pipeline system and need to go on with drying for half an hour.
3 If the vacuum degree of vacuum pump still could not reach -755mmHg after 1.5 hours of drying, check whether there is leakage source.
4 Leakage test: After the vacuum degree reaches -755mmHg, stop vacuum drying and keep the pressure for 1 hour. If the indicator of vacuum gauge does not go up, it is qualified. If going up, it indicates that there is moisture or leak source.

7.3.2 Special vacuum drying

The special vacuum drying method shall be adopted when:

1. Finding moisture during flushing refrigerant pipe.
2. Conducting construction on rainy day, because rain water might penetrated into pipeline.
3. Construction period is long, and rain water might penetrated into pipeline.
4. Rain water might penetrate into pipeline during construction.

Procedures of special vacuum drying are as follows:

1. Vacuum drying for 1 hour.
2. Vacuum damage, filling nitrogen to reach 0.5Kgf/cm2 .
   Because nitrogen is dry gas, vacuum damage could achieve the effect of vacuum drying, but this method could not achieve drying thoroughly when there is too much moisture. Therefore, special attention shall be drawn to prevent the entering of water and the formation of condensate water.
3. Vacuum drying again for half an hour.
   If the pressure reached -755mmHg, start to pressure leakage test. If it cannot reached the value, repeat vacuum damage and vacuum drying again for 1 hour.
4 Leakage test: After the vacuum degree reaches -755mmHg, stop vacuum drying and keep the pressure for 1 hour. If the indicator of vacuum gauge does not go up, it is qualified. If going up, it indicates that there is moisture or leak source.

8. Additional refrigerant charge

- After the vacuum drying process is carried out, the additional refrigerant charge process need to be performed.
- The outdoor unit is factory charged with refrigerant. The additional refrigerant charge volume is decided by the diameter and length of the liquid pipe between indoor and outdoor unit. Refer the following formula to calculate the charge volume.

Diameter of liquid pipe (mm)	Φ6.35	Φ9.52
Formula	V=12g/m×(L-5)	V=24g/m×(L-5)

V: Additional refrigerant charge volume (g).
L : The length of the liquid pipe (m).

Note:

- Refrigerant may only be charged after performed the vacuum drying process.
- Always use gloves and glasses to protect your hands and eyes during the charge work.
- Use electronic scale or fluid infusion apparatus to weight refrigerant to be recharged. Be sure to avoid extra refrigerant charged, it may cause liquid hammer of the compressor or protections.
- Use supplementing flexible pipe to connect refrigerant cylinder, pressure gauge and outdoor unit. And The refrigerant should be charged in liquid state. Before recharging, The air in the flexible pipe and manifold gauge should be exhausted.
- After finished refrigerant recharge process, check whether there is refrigerant leakage at the connection joint part.(Using gas leakage detector or soap water to detect).

9. Engineering of insulation

9.1 Insulation of refrigerant pipe

9.1.1 Operational procedure of refrigerant pipe insulation

Cut the suitable pipe → insulation (except joint section) → flare the pipe → piping layout and connection→ vacuum drying → insulate the joint parts

9.1.2 Purpose of refrigerant pipe insulation

- During operation, temperature of gas pipe and liquid pipe shall be over-heating or over-cooling extremely. Therefore, it is necessary to carry out insulation; otherwise it shall debase the performance of unit and burn compressor.
- Gas pipe temperature is very low during cooling. If insulation is not enough, it shall form dew and cause leakage.
- Temperature of gas pipe is very high (generally 50-100℃) during heating. Insulation work must be carried out to prevent hurt by carelessness touching.

9.1.3 Insulation material selection for refrigerant pipe

- The burning performance should over 120℃
- According to the local law to choose insulation materials
- The thickness of insulation layer shall be above 10mm.If in hot or wet environment place, the layer of insulation should be thicker accordingly.

9.1.4 Installation highlights of insulation construction

- Gas pipe and liquid pipe shall be insulated separately, if the gas pipe and liquid pipe were insulated together; it will decrease the performance of air conditioner.

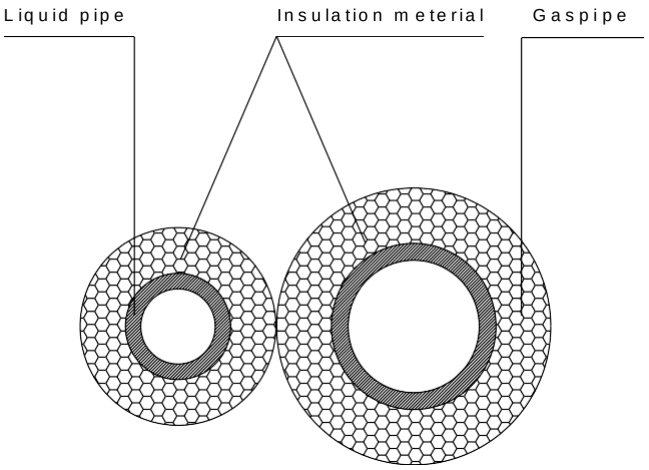

- The insulation material at the joint pipe shall be 5~10cm longer than the gap of the insulation material.
- The insulation material at the joint pipe shall be inserted into the gap of the insulation material.
- The insulation material at the joint pipe shall be banded to the gap pipe and liquid pipe tightly.
- The linking part should be use glue to paste together
- Be sure not bind the insulation material over-tight, it may extrude out the air in the material to cause bad insulation and cause easy aging of the material.

9.2 Insulation of drainage pipe

9.2.1 Operational procedure of refrigerant pipe insulation

Select the suitable pipe → insulation (except joint section) → piping layout and connection→ drainage test→ insulate the joint parts

9.2.2 Purpose of drainage pipe insulation

The temperature of condensate drainage water is very low. If insulation is not enough, it shall form dew and cause leakage to damage the house decoration.

9.2.3 Insulation material selection for drainage pipe

- The insulation material should be flame retardant material, the flame retardancy of the material should be selected according to the local law.
- Thickness of insulation layer is usually above 10mm.
- Use specific glue to paste the seam of insulation material, and then bind with adhesive tape. The width of tape shall not be less than 5cm. Make sure it is firm and avoid dew.

9.2.4 Installation and highlights of insulation construction

- The single pipe should be insulated before connecting to another pipe, the joint part should be insulated after the drainage test.
- There should be no insulation gap between the insulation material.

10. Engineering of electrical wiring

10.1 Highlights of electrical wiring installation

- All field wiring construction should be finished by qualified electrician.
- Air conditioning equipment should be grounded according to the local electrical regulations.
- Current leakage protection switch should be installed.
- Do not connect the power wire to the terminal of signal wire.
- When power wire is parallel with signal wire, put wires to their own wire tube and remain at least 300mm gap.
- According to table in indoor part named “the specification of the power” to choose the wiring, make sure the selected wiring not small than the date showing in the table.
- Select different colors for different wire according to relevant regulations.
- Do not use metal wire tube at the place with acid or alkali corrosion, adopt plastic wire tube to replace it.
- There must be not wire connect joint in the wire tube If joint is a must, set a connection box at the place.
- The wiring with different voltage should not be in one wire tube.
- Ensure that the color of the wires of outdoor and the terminal No. are same as those of indoor unit respectively.

11. Test operation

11.1 The test operation must be carried out after the entire installation has been completed.

11.2 Please confirm the following points before the test operation.

- The indoor unit and outdoor unit are installed properly.
- Tubing and wiring are correctly completed.
- The refrigerant pipe system is leakage-checked.
- The drainage is unimpeded.
- The ground wiring is connected correctly.
- The length of the tubing and the added stow capacity of the refrigerant have been recorded.
- The power voltage fits the rated voltage of the air conditioner.
- There is no obstacle at the outlet and inlet of the outdoor and indoor units.
- The gas-side and liquid-side stop values are both opened.
- The air conditioner is pre-heated by turning on the power.

11.3 Test operation

Set the air conditioner under the mode of "COOLING" by remote controller, and check the following points.

Indoor unit

- Whether the switch on the remote controller works well.
- Whether the buttons on the remote controller works well.
- Whether the air flow louver moves normally.
- Whether the room temperature is adjusted well.
- Whether the indicator lights normally.
- Whether the temporary buttons works well.
- Whether the drainage is normal.
- Whether there is vibration or abnormal noise during operation.

Outdoor unit

- Whether there is vibration or abnormal noise during operation.
- Whether the generated wind, noise, or condensed of by the air conditioner have influenced your neighborhood.
- Whether any of the refrigerant is leaked.

Part 5
Electrical Control System

1. Electrical Control Function 130

2. Troubleshooting 141

3. Controller 175

1. Electrical Control Function

1.1 Abbreviation

T1: Indoor room temperature

T2: Middle indoor heat exchanger coil temperature

T2B: Indoor heat exchanger exhaust coil temperature

T3: Outdoor heat exchanger pipe temperature

T4: Outdoor ambient temperature

T5: Compressor discharge temperature

1.2 Main Protection

1.2.1 Compressor Restart Delay

1.2.2 Temperature Protection of Compressor Discharge

When the discharge temperature of compressor rises, the running frequency is limited according to the following rules:

12K/18K

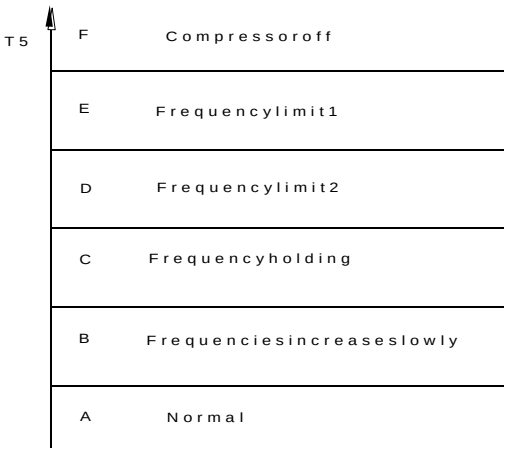

24~60K

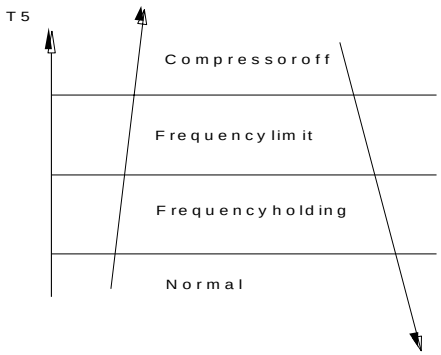

1.2.3 Indoor Fan Delayed Open Function

When the unit starts up, the louver is immediately active . The indoor fan opens 7 seconds later.
If the unit runs in heating mode, the indoor fan is also regulated by the anti-cold wind function.

1.2.4 Fan Speed Malfunction

For A6 Duct:
If a fault occurs on the air volume regulator or the regulator enters protection mode, it sends the error message CF and an instruction to reduce fan speed to the master. The message and the instruction can be inquired with the remote controller or the wired controller. (Fault and protection information are displayed for one minute). After a fault occurs, the master unit shows the error code E3 and the fault count for one minute. If the fault occurs three times, then the fan is unable to resolve the problem independently. External shutdown by a remote controller, wired controller, or central controller must be used to clear the fan fault and fault count. The fan runs normally for 5 minutes while clearing fault count.

0 : No malfunction
1 : P0 Overcurrent
2 : Overpressure
3 : Overload
4 : Over speed
5 : Startup malfunction
6 : Lack of phase
7 : DC voltage too low
8 : Communication fault
9 : Parameter fault
10 : L3 Current limited
11 : L5 Voltage limited
12: Target speed cannot be met during the static pressure calculation process.

For other models:

If the indoor fan speed is lower than 300 RPM for 50 seconds or more, it shuts off and restarts in 30 seconds. If this happens 3 times, the unit stops and the LED displays the failure code.

1.3 Operation Modes and Functions

1.3.1 Fan Mode

(1) Outdoor fan and compressor cease operation.

(2) Temperature setting function is disabled, and no preset temperature is displayed.

(3) Louver operates the same as in cooling mode.

(4) Auto fan:

When it fan-only mode, operates the same as auto fan in cooling mode with the temperature set at 24℃.

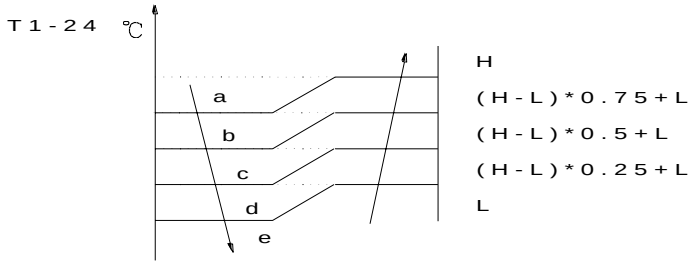

1.3.2 Cooling Mode

1.3.2.1 Outdoor Fan Running Guidelines

The outdoor unit can run at different fan speeds depending on T4.
Fan speeds vary with the model of air conditioner.
12K/18K
Fan speed is regulated according to T4 and compressor frequency.

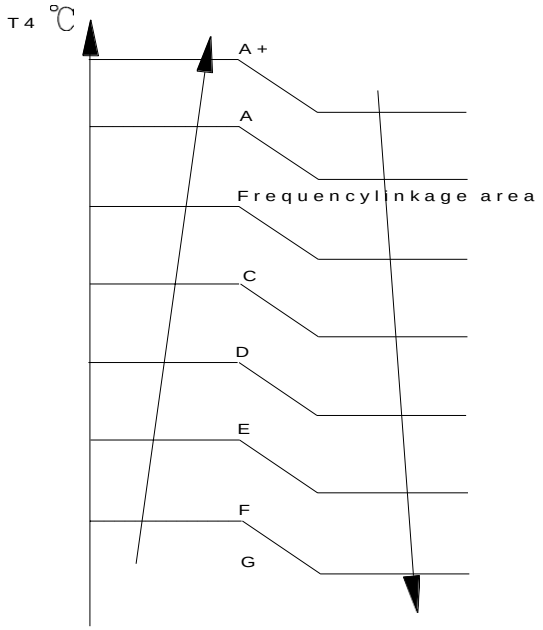

Frequency linkage area:

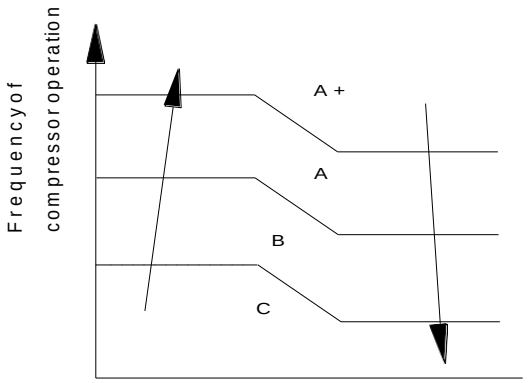

24~60K

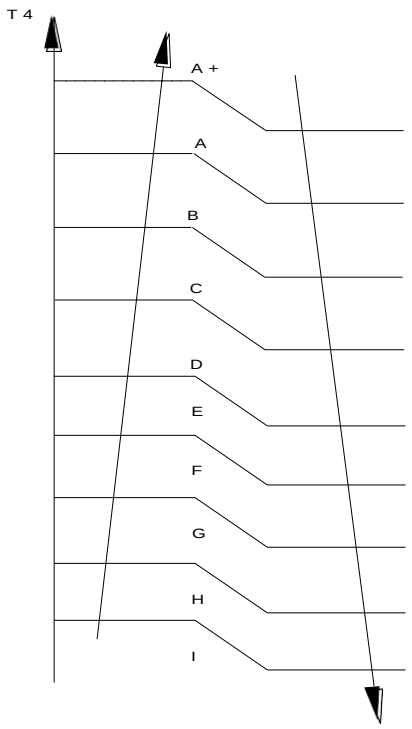

1.3.2.3 Indoor Fan Running Guidelines

In cooling mode, the indoor fan runs continuously and You can select the following speeds: high, medium, low, auto or silent. When the compressor is running, The indoor fan is regulated as illustrated as in the following figure:

Setting fan speed	T1-Td ℃(°F)		Actual fan speed
H			H+(H+=H+G)
		A	H（=H）
		B	H-（H-=H-G)
		C	
M			M+(M+=M+Z)
		D	M(M=M)
		E	M-(M-=M-Z)
		F	
L			L+(L+=L+D)
		G	L(L=L)
		H	L-(L-=L-D)
		I	

The auto fan in cooling mode acts as follows:

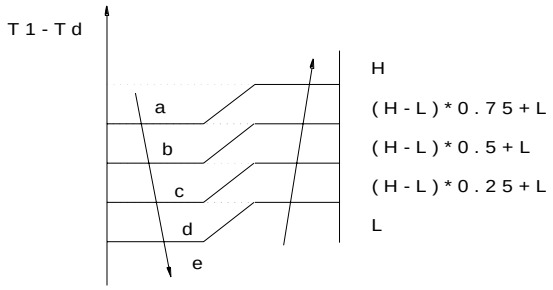

1.3.2.3 Evaporator Low Temperature T2 Protection.

---T2<0℃, the compressor stops and restarts only when T2≥5℃.

---0℃≤T2<4℃, the compressor frequency is limited and decreases to a lower level

---4℃≤T2<7℃, the compressor maintains its current frequency.

---T2>7℃, the compressor frequency is not limited.

1.3.2.4 High Condenser Coil Temperature Protection

12K/18K

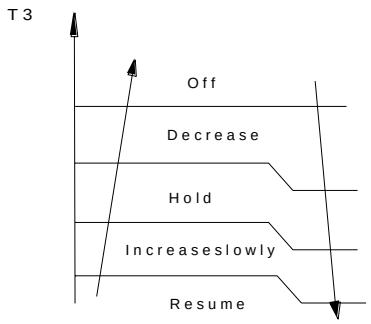

24~60K

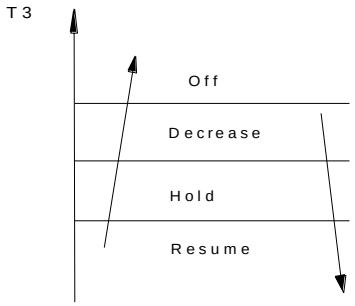

1.3.3 Heating Mode

1.3.3.1 Outdoor Fan Running Guidelines

12K/18K

Fan speed is regulated according to T4 and compressor frequency.

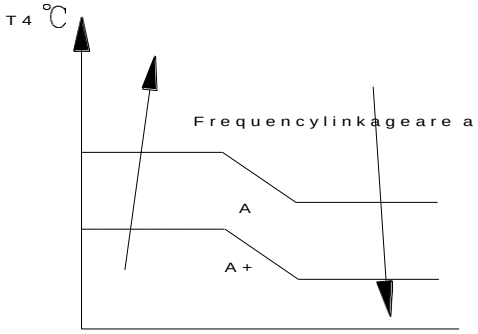

Frequency linkage area:

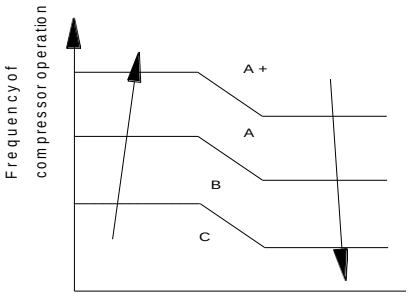

24~60K:

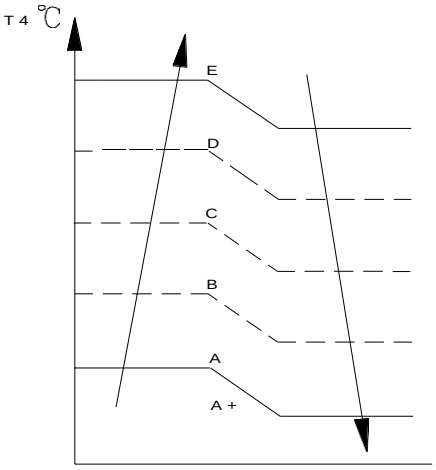

1.3.3.2 Indoor Fan Running Guidelines

In heating mode, indoor fan speed can be set at high, medium, low, or auto fan, and the anti-cold-wind function is preferential.
When the compressor is running, The indoor fan is regulated as illustrated as in the following figure:

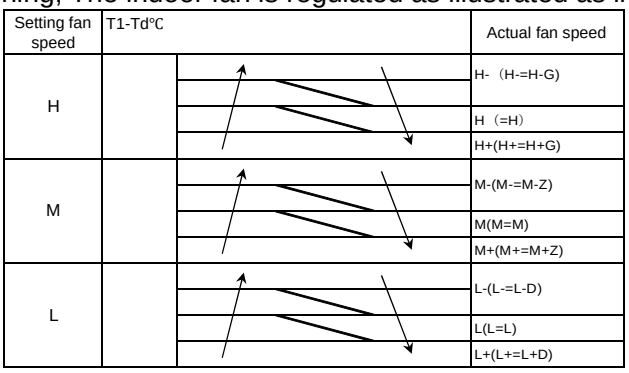

When the indoor temp reaches the preset temperature, the compressor stops and the indoor fan motor runs at the minimum speed (The anti-cold-wind is valid).

The auto fan in heating mode acts as follows:

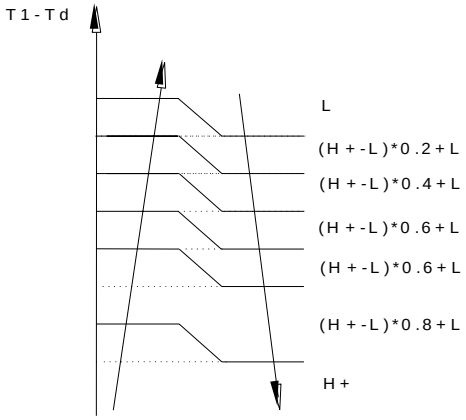

1.3.3.3 Defrosting Control：

Conditions for defrosting:

----the unit enters the defrosting mode according to the value of T3 and T4 as well as the compressor running time.

Defrost Stop Conditions:

If any one of the following conditions is satisfied, defrosting ends and the unit returns to heating mode.

----T3 rises above than TCDE1℃.

----T3 remains at TCDE2℃ or above for 80 seconds.

----The machine runs for 10 consecutive minutes in defrosting mode.

1.3.3.4 High Evaporator Coil Temperature T2 Protection:

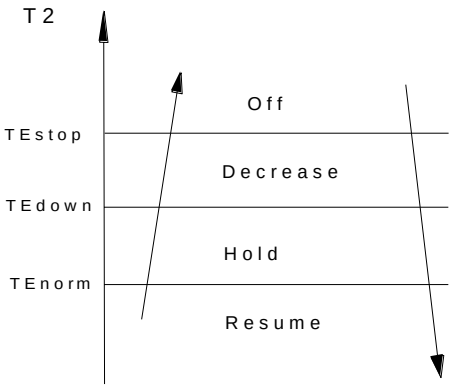

Off: Compressor stops.

Decrease: Decreases the running frequency.

Hold: Maintains the current frequency.

Resume: No limitation is applied to frequency.

.

1.3.4 Auto-mode

You can choose this mode with the remote control and adjust to temperature to between 17-30.

In auto mode, the machine chooses cooling, heating or fan-only mode according to ΔT (ΔT =T1-Ts).

ΔT=T1-Ts	Running mode
ΔT＞2℃	Cooling
-2<ΔT≤2℃	Fan-only
ΔT≤-2℃	Heating

The indoor fan runs at auto fan in each mode.

The louver operates the same in each mode.

If the machine switches mode between heating and cooling, the compressor stops for 15 minutes and then selects a mode again according to T1-Ts.

If the temperature is modified, the machine selects a running function.

1.3.5 Dehumidifier Mode

The indoor fan speed is fixed at breeze and can't be changed.

All protections are activated and operate the same as they do in cooling mode.

1.3.6 Timer Function

1.3.6.1 The timing range is 24 hours.

1.3.6.2 Timer On. The machine turns on automatically at the preset time.

1.3.6.3 Timer Off. The machine turns off automatically at the preset time.

1.3.6.4 Timer On/Off. The machine turns on automatically at the preset On Time, and then turns off automatically at the preset Off Time.

1.3.6.5 Timer Off/On. The machine turns on automatically at the preset Off Time and then turns off automatically at the preset On Time.

1.3.6.6 The timer does not change the unit operation mode. If the unit is off now, it does not start up immediately after the “timer off” function is set. When the setting time is reached, the timer LED switches ioff and the unit running mode remains unchanged.

1.3.6.7 The timer uses relative time, not clock time.

1.3.7 Sleep Mode

1.3.7.1 The sleep function is available in cooling, heating or auto mode.

1.3.7.2. The operational process in sleep mode is as follows:
When cooling, the temperature rises 1℃(to not higher than 30℃) every hour, 2 hours later the temperature stops rising and the indoor fan is fixed to low speed.
When heating, the temperature decreases 1℃ (to not lower than 17℃) every hour, 2 hours the temperature stops decreasing and the indoor fan is fixed at low speed. (Anti-cold wind function takes priority).

1.3.7.3 Sleep mode lasts a maximum of 7 hours. After 7 hours, the unit does not switch off., but for console, the unit switches off.

1.3.7.4 The timer uses relative time, not clock time.

1.3.8 Auto-Restart Function

The indoor unit has an auto-restart module that allows the unit to restart automatically. The module automatically stores the current settings (not including the Swing setting) and, in the case of a sudden power failure, will restore those setting automatically within 3 minutes after power returns.

1.3.9 Drain Pump Control (For Duct and Cassette)

Use the water-level switch to control drain pump.

The system checks the water level every 5 seconds.
----When the A/C operates in cooling (including auto cooling) or forced cooling mode, the pump begins running immediately and continuously until cooling stops.

----If the water level increases up to the control point, the LED displays an alarm code and the drain pump opens and continually monitors the water level. If the water level falls and LED alarm code is no longer displayed (drain pump close delay is 1 minute), the unit goes back into its last mode. Otherwise, the entire system (including the pump) stops and the LED displays an alarm again after 3 minutes.

1.3.10 Follow Me(Optional)

If you press "Follow Me" on the remote, the indoor unit will beep. This indicates the follow me function is active.

Once active, the remote control will send a signal every 3 minutes, with no beeps. The unit automatically sets the temperature according to the measurements from the remote control.

The unit will only change modes if the information from the remote control makes it necessary, not from the unit's temperature setting.

1.3.11 Outdoor Unit Point Check Function(Excluding 12K&18K models)

A check switch is included on the outdoor PCB.

Push SW1 to check the unit's status while running. The digital display shows the following codes each time the SW1 is pushed.

<table>
<tr><th>N</th><th>Display</th><th colspan="3">Remark</th></tr>
<tr><td>00</td><td>Normal display</td><td colspan="3">Displays running frequency, running state, or malfunction code</td></tr>
<tr><td>01</td><td>Indoor unit capacity demand code</td><td colspan="3">Actual data*HP*10

If a capacity demand code is higher than 99, the digital display shows single and double digits.

For example, if the digital display shows “5.0”, the capacity demand is 15. If the digital display tube shows “60”, the capacity demand is 6.0.</td></tr>
<tr><td>02</td><td>Amendatory capacity demand code</td><td colspan="3"></td></tr>
<tr><td>03</td><td>The frequency after the capacity requirement transfer</td><td colspan="3"></td></tr>
<tr><td>04</td><td>The frequency after the frequency limit</td><td colspan="3"></td></tr>
<tr><td>05</td><td>The frequency of sending to 341</td><td colspan="3"></td></tr>
<tr><td>06</td><td>Indoor unit evaporator outlet temperature (heating T2, cooling T2B)</td><td colspan="3" rowspan="3">If the temperature is lower than -9 ℃, the digital display shows “-9.” If the temperature is higher than 70 ℃, the digital display shows “70.” If the indoor unit is not connected, the digital display shows: “——”</td></tr>
<tr><td>07</td><td>Condenser pipe temperature (T3)</td></tr>
<tr><td>08</td><td>Outdoor ambient temperature (T4)</td></tr>
<tr><td>09</td><td>Compressor discharge temperature (T5)</td><td colspan="3">The display value is between 0–129 ℃. If the temperature is higher than 99 ℃, the digital display shows single and double digits.

For example, if the digital display shows “0.5", the compressor discharge temperature is 105 ℃.

If the digital display shows “1.6,” the compressor discharge temperature is 116 ℃.</td></tr>
<tr><td>10</td><td>AD value of current</td><td colspan="3" rowspan="2">The display value is a hexidecimal number.</td></tr>
<tr><td>11</td><td>AD value of voltage</td></tr>
<tr><td>12</td><td>Indoor unit running mode code</td><td colspan="3">Off:0, Fan only: 1,Cooling: 2, Heating: 3, Forced cooling: 4, Dry: 6, Self-clean: 8, Forced defrosting: 10</td></tr>
<tr><td>13</td><td>Outdoor unit running mode code</td><td colspan="3">Off:0, Fan only: 1,Cooling: 2, Heating: 3, Forced cooling: 4, Dry: 6, Self-clean: 8, Forced defrosting:10</td></tr>
<tr><td>14</td><td>EXV open angle</td><td colspan="3">Actual data/4.
If the value is higher than 99, the digital display shows single and double digits.
For example, if the digital display shows “2.0", the EXV open angle is 120×4=480p.</td></tr>
<tr><td>15</td><td>Frequency limit symbol</td><td>Bit7</td><td>Frequency limit caused by IGBT radiator</td><td rowspan="8">The display value is a hexadecimal number. For example, the digital display show 2A, then Bit5=1, Bit3=1, and Bit1=1.
It means frequency limit may be caused by T4, T3 or the current.</td></tr>
<tr><td></td><td></td><td>Bit6</td><td>Frequency limit caused by PFC</td></tr>
<tr><td></td><td></td><td>Bit5</td><td>Frequency limit caused by T4.</td></tr>
<tr><td></td><td></td><td>Bit4</td><td>Frequency limit caused by T2.</td></tr>
<tr><td></td><td></td><td>Bit3</td><td>Frequency limit caused by T3.</td></tr>
<tr><td></td><td></td><td>Bit2</td><td>Frequency limit caused by T5.</td></tr>
<tr><td></td><td></td><td>Bit1</td><td>Frequency limit caused by current</td></tr>
<tr><td></td><td></td><td>Bit0</td><td>Frequency limit caused by voltage</td></tr>
<tr><td>16</td><td>DC fan motor speed</td><td colspan="3">0 : Off, 1: Turbo, 2: High, 3: Medium, 4: Low, 5: Breeze, 6: Supper breeze</td></tr>
<tr><td>17</td><td>IGBT radiator temperature</td><td colspan="3">The display value is between 0–30 ℃. If the temperature is higher than 99 ℃, the digital display shows single and double</td></tr>
</table>

		digits. For example, if the digital display shows “0.5", the IGBT radiator temperature is 105 ℃. If the digital display shows “1.6", the IGBT radiator temperature is 116 ℃.
18	Indoor unit number	The indoor unit can communicate with outdoor unit. General: 1, Twins: 2
19	Condenser pipe temperature of #1 indoor unit	If the temperature is lower than 0 ℃, the digital display shows “0”. If the temperature is higher than 70 ℃, the digital display shows “70.” If the capacity demand is 0, the digital display shows “0”. If the indoor unit is not connected, the digital display shows: “——”(heating T2, cooling T2B)
20	Condenser pipe temperature of #2 indoor unit	
21	Reserved	
22	#1 Indoor unit capacity demand code	Actual data*HP*10 If a capacity demand code is higher than 99, the digital display shows single and double digits. For example, if the digital display reads “5.0”, the capacity demand is 15. If the digital display shows “60”, the capacity demand is 6.0. If the indoor unit is not connected, the digital display shows: “——”
23	#2 Indoor unit capacity demand code	
24	Reserved	
25	Indoor room temperature of #1 indoor unit	If the temperature is lower than -9 ℃, the digital display shows “9”. If the temperature is higher than 70 ℃, the digital display shows “70”. If the capacity demand is 0, the digital display shows “0”. If the indoor unit is not connected, the digital display shows: “——”
26	Indoor room temperature of #2 indoor unit	If the temperature is lower than 0 ℃, the digital display shows “0”. If the temperature is higher than 70 ℃, the digital display shows “70”. If the capacity demand is 0, the digital display shows “0". If the indoor unit is not connected, the digital display shows: “——”
27	Average of indoor room temperature	If the temperature is lower than 0 ℃, the digital display shows “0”. If the temperature is higher than 70 ℃, the digital display shows “70”.
28	Shutdown cause	Refer to Appendix
29	T2B of #1 indoor unit	If the temperature is lower than -9 ℃, the digital display shows “9”. If the temperature is higher than 70 ℃, the digital display shows “70”. If the capacity demand is 0, the digital display shows “0”. If the indoor unit is not connected, the digital display shows: “——”
30	T2B of #2 indoor unit	If the temperature is lower than 0 ℃, the digital display shows “0”. If the temperature is higher than 70 ℃, the digital display shows “70”.

		If the capacity demand is 0, the digital display shows “0”. If the indoor unit is not connected, the digital display shows: “——”

Appendix

Shutdown Causes	***Code***
Frequency limit caused by current	*1*
Frequency limit caused by T2 in cooling	*2*
Frequency limit caused by T2 in heating	*3*
Preset temperature reached	*4*
Frequency limit caused by T4	*5*
Defrosting	*6*
Mode switching	*7*
High discharge temperature protection	*9*
High evaporator coil temperature T2 protection	*10*
Evaporator low temperature T2 protection	*11*
Condenser high temperature T3 protection	*12*
Low indoor room temperature protection in drying mode	*13*
Low ambient temperature protection	*14*
Refrigerant leakage detection	*15*
Communication malfunction between indoor and outdoor units	*16*
Communication error between outdoor main chip and compressor driven chip IR341	*17*
AC power input voltage protection	*18*
Top temperature protection of compressor	*19*
Outdoor EE Malfunction	*20*
Fan speed malfunction	*21*
Temperature sensor open or short circuit	*22*
Overcurrent protection	*23*
IMP overcurrent protection	*24*
Compressor lack of phase	*25*
Compressor malfunction	*26*
Low pressure protection of 311	*27*
Fan current protection	*28*
Fan lack of phase	*29*
Fan zero speed protection	*30*
PFC module protection	*31*
High pressure protection of 311	*32*
Zero speed malfunction	*33*
PWM malfunction	*34*
MCE malfunction	*35*
Compressor overcurrent protection	*36*
Compressor EE malfunction	*37*
Compressor start-up malfunction	*38*
311 fan speed has been malfunction	*39*
Low pressure protection	*40*
High pressure protection	*41*
PFC module malfunction	*42*
Shutdown stop	*49*
Electrical disconnect	*50*
DR stop	*51*

2. Troubleshooting

2.1 Display board

2.1.1 Icon explanation on indoor display board (Super slim cassette).

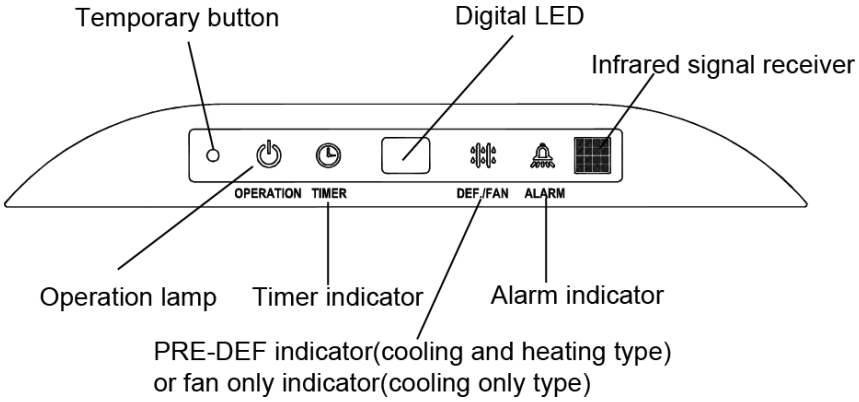

2.1.2 Icon explanation on indoor display board (A6 Duct)

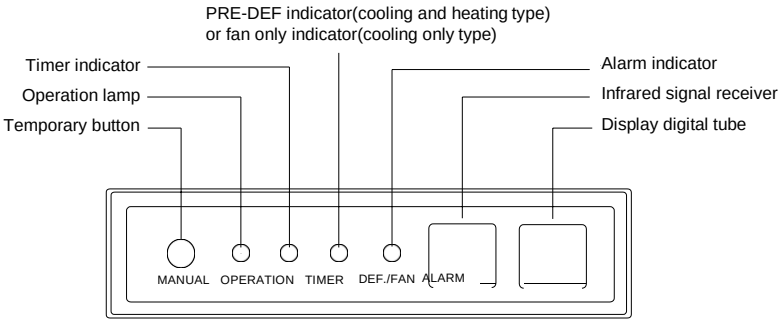

2.1.3 Display board of Ceiling-floor indoor unit

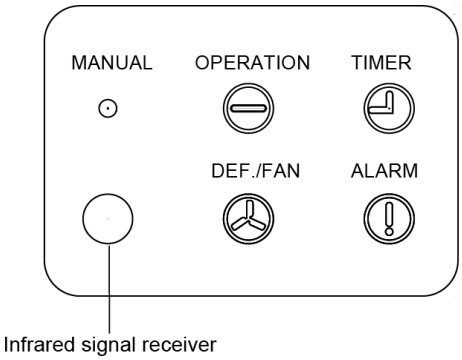

2.1.4 Display board of compact four-way cassette

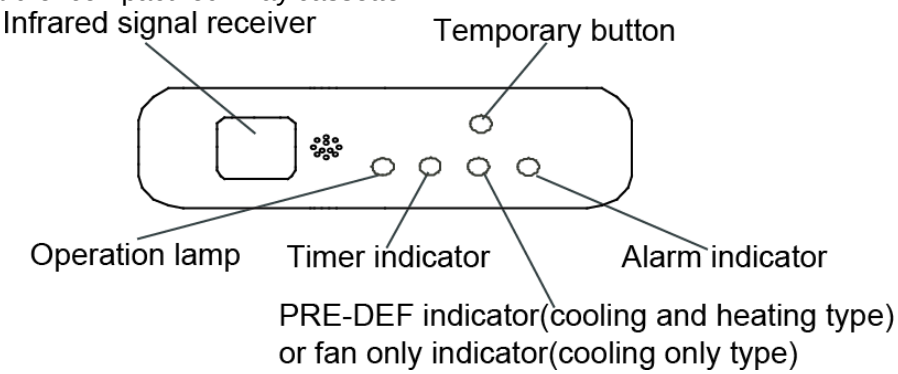

2.2 Indoor Unit Malfunctions

Malfunction	Error Code	Timer Lamp	Operation Lamp (flashes)
Indoor EEPROM malfunction	E0	X	1
Communication malfunction between indoor and outdoor units	E1	X	2
Indoor fan speed malfunction	E3	X	4
T1 temperature sensor open or short circuit	E4	X	5
T2 temperature sensor open or short circuit	E5	X	6
Refrigerant leakage detection	EC	X	7
Water level alarm malfunction	EE	X	8
Communication error between master and slave unit (for twins system)	E8	X	9
Another indoor unit malfunction (for twins system)	E9	X	10
Outdoor unit is faulty (for old communication protocol)	Ed	X	11
Overcurrent protection (for some units)	F0	O	1
T4 temperature sensor open or short circuit	F1	O	2
T3 temperature sensor open or short circuit	F2	O	3
T5 temperature sensor open or short circuit	F3	O	4
Outdoor EEPROM malfunction (for some units)	F4	O	5
Outdoor fan speed malfunction	F5	O	6
T2B temperature open or short circuit (for free-match indoor units)	F6	O	7
Communication error between auto-lifting panel and slim cassette	F7	O	8
Auto-lifting panel is faulty (for slim cassettes with an auto-lifting panel)	F8	O	9
Auto-lifting panel is not closed (for slim cassettes with an auto-lifting panel)	F9	O	10
Communication malfunction between indoor two chips(For A6 Duct)	FA	O	11
IPM module malfunction	P0	☆	1
DC voltage too high/too low protection	P1	☆	2
Top of compressor high temperature protection	P2	☆	3
Low ambient temperature protection	P3	☆	4
Inverter compressor drive protection	P4	☆	5
Compressor low pressure protection	P6	☆	7
Outdoor IGBT sensor is faulty	P7	☆	8
O (on) X(off) ☆(flash at 2Hz)			

2.3 Outdoor Unit Malfunctions

For 24K~60K:

Display	Malfunction or Protection
E1	Communication malfunction between indoor and outdoor units
F0	Overcurrent protection
F1	Ambient temperature sensor (T4) malfunction
F2	Outdoor heat-exchanger temperature sensor (T3) malfunction
F3	Discharge temperature sensor (T5) malfunction
F4	Outdoor EEPROM malfunction
F5	Outdoor fan speed malfunction
P0	IPM module protection
P1	DC voltage too high/too low protection
P3	Ultra-low ambient temperature protection
P4	Compressor rotor position protection
J0	Evaporator high temperature protection
J1	Condenser high temperature protection
J2	High discharge temperature protection
J3	PFC module protection
J4	Communication error between outdoor main chip and compressor driven chip
J5	High pressure protection
J6	Low pressure protection
P7	IGBT sensor malfunction
J8	AC power input voltage protection

In low ambient cooling mode, the LED displays “LC” or alternates between running frequency and “LC” (each appears for 0.5s).

2.4 Resolving Typical Malfunctions

2.4.1 For Indoor Units

2.4.1.1 Temperature Sensor Open or Short Circuit

Malfunction conditions	If the sampling voltage is lower than 0.06V or higher than 4.94V, the LED will display the failure.
Possible causes	• Wiring mistakes • Faulty sensor • Faulty PCB

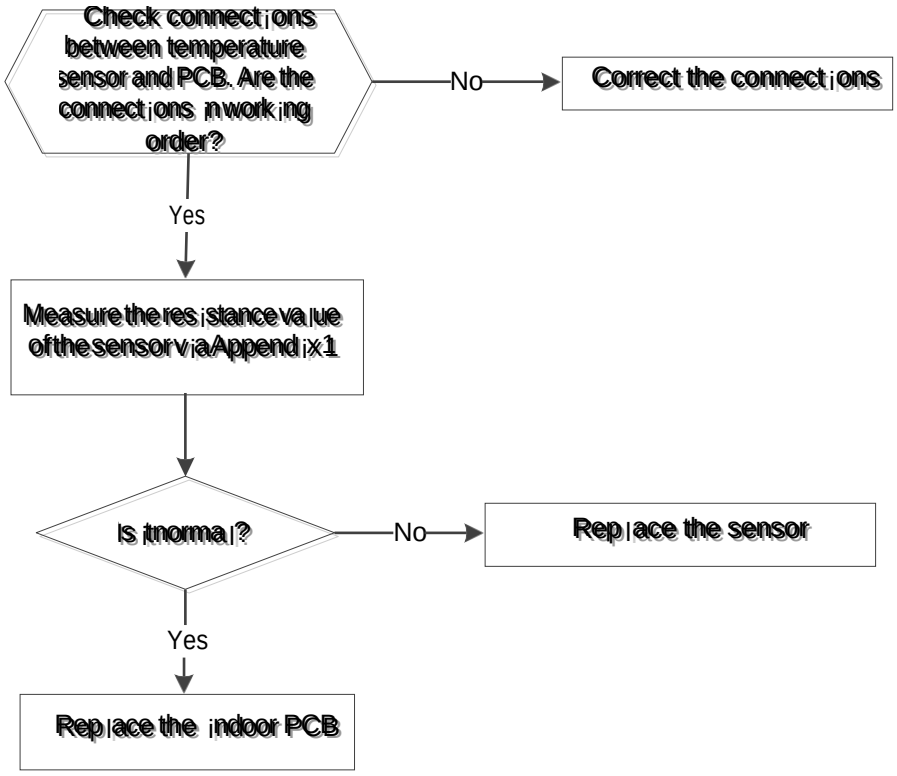

2.4.1.2. Outdoor Unit Malfunction

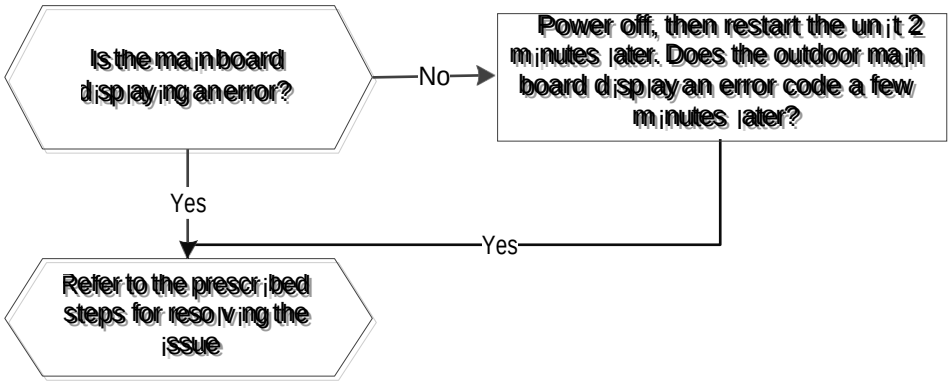

2.4.1.3. Indoor EEPROM Malfunction

Malfunction conditions	Main PCB chip does not receive feedback from EEPROM chip
Possible causes	• Installation mistakes • Faulty PCB

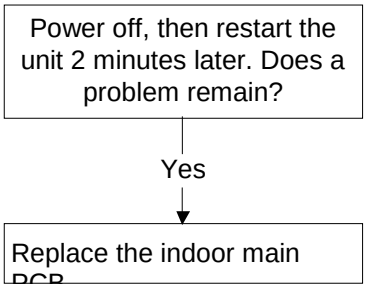

EEPROM: An electrically erasable programmable read-only memory whose contents can be erased and reprogrammed using a pulsed voltage.

2.4.1.4. Water-Level Alarm Malfunction

Malfunction conditions	If the sampling voltage is not 5V, the LED will display the failure code.
Possible causes	• Wiring mistakes • Faulty water-level switch • Faulty water pump • Faulty indoor PCB

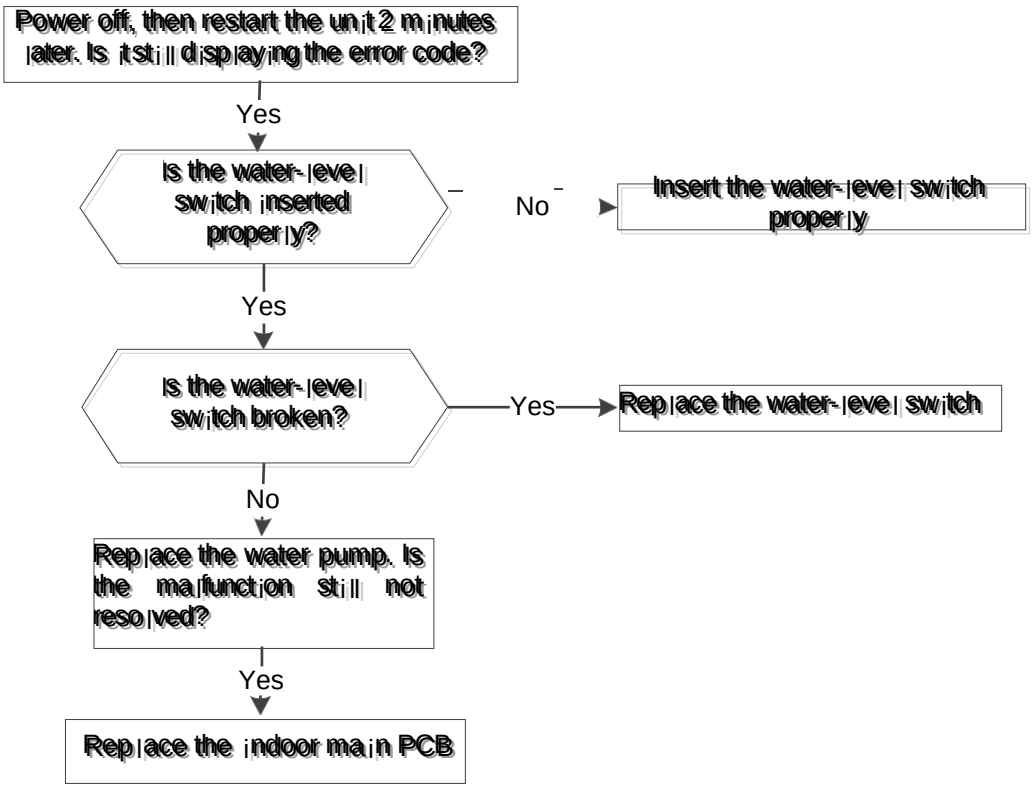

2.4.1.5. Indoor Fan Speed Malfunction

Malfunction conditions	When indoor fan speed continues to run at too low a speed (300RPM) for a certain period of time, the unit will stop and the LED will display a failure code.
Possible causes	• Wiring mistakes • Faulty fan assembly • Faulty fan motor • Faulty PCB

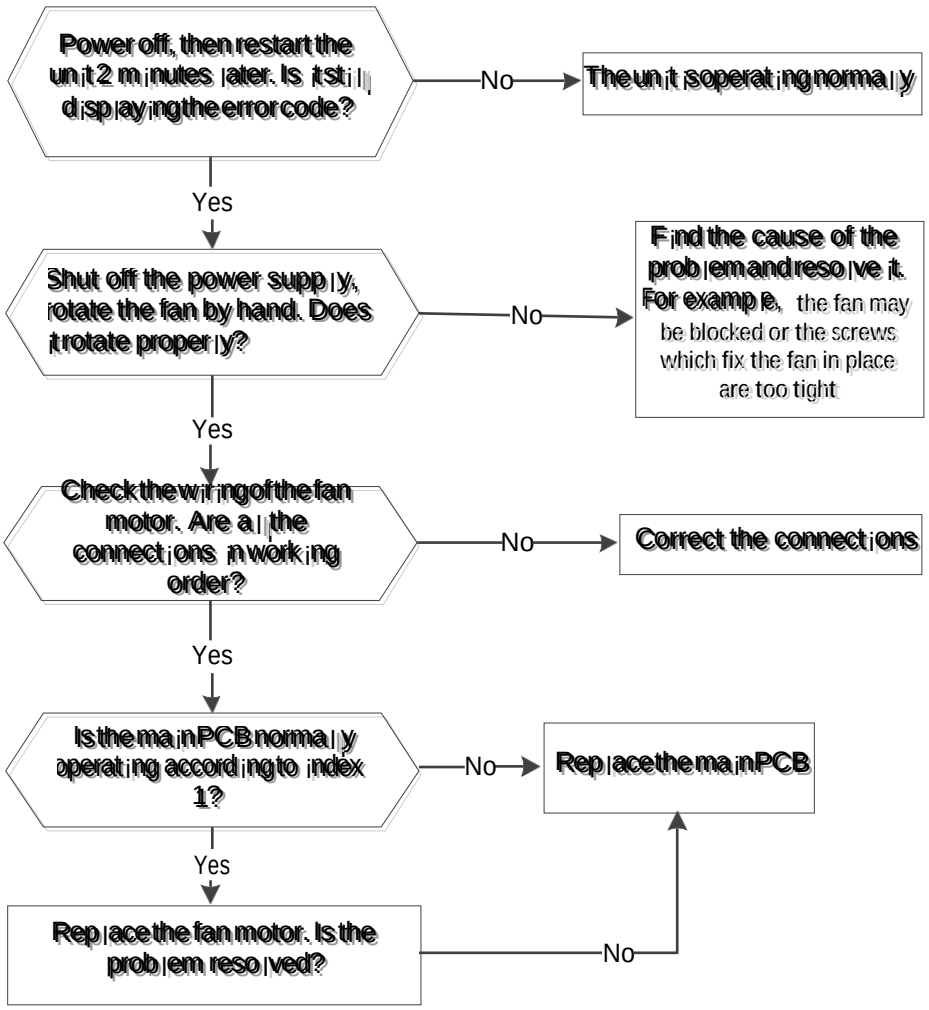

Index 1:

1. Indoor or outdoor DC fan motor (control chip is located inside the fan motor)

Power on and when the unit is on standby, measure the voltage of pin1-pin3, pin4-pin3 in the fan motor connector. If the value of the voltage is not within the range shown in the following table, the PCB may be experiencing problems and may need to be replaced.

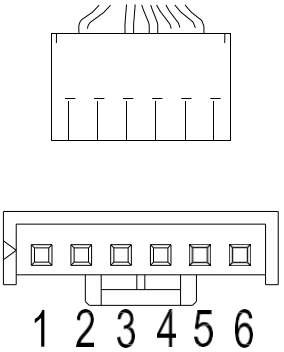

DC motor voltage input and output

NO.	Color	Signal	Voltage
1	Red	Vs/Vm	200V~380V
2	---	---	---
3	Black	GND	0V
4	White	Vcc	13.5-16.5V
5	Yellow	Vsp	0~6.5V
6	Blue	FG	13.5-16.5V

2. Indoor or outdoor DC Fan Motor (control chip is in PCB)
Release the UVW connector. Measure the resistance of U-V, U-W, and V-W. If the resistances are not equal to each other, the fan motor may be experiencing problems and need to be replaced. Otherwise, the PCB must has problems and need to be replaced.

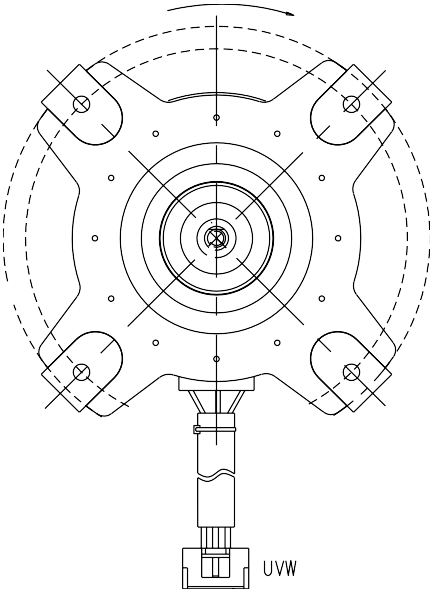

2.4.1.6. Refrigerant Leakage Detection

Malfunction conditions	**Define the evaporator coil temperature T2 of the compressor starts running as Tcool.** **If the following occurs 3 times, the display shows "EC" and the unit switches off:** **In the first 8 minutes after the compressor starts up, if T2 ＜Tcool－2℃ is not maintained for 4 seconds and compressor running frequency is not higher than 50Hz for 3 minutes**
Potential causes	• **T2 sensor error** • **Indoor PCB error** • **Refrigerant system error, such as leakage or blockages**

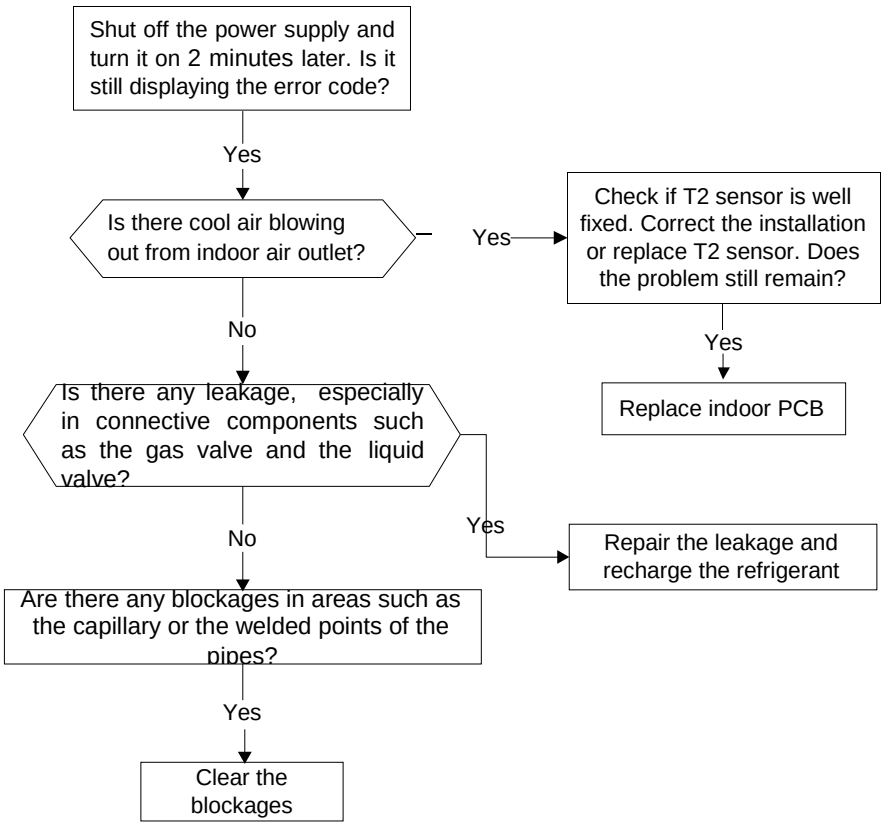

2.4.1.7 Outdoor IGBT sensor is faulty

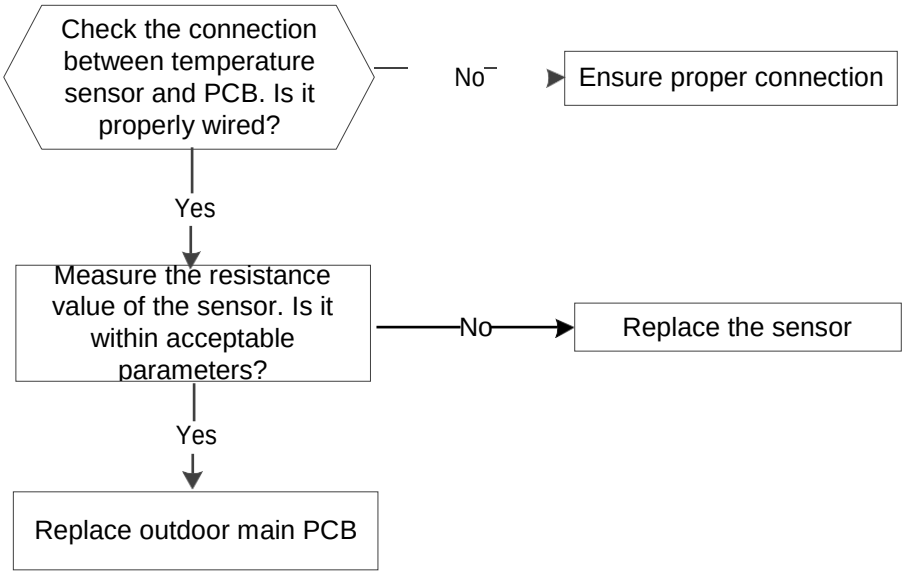

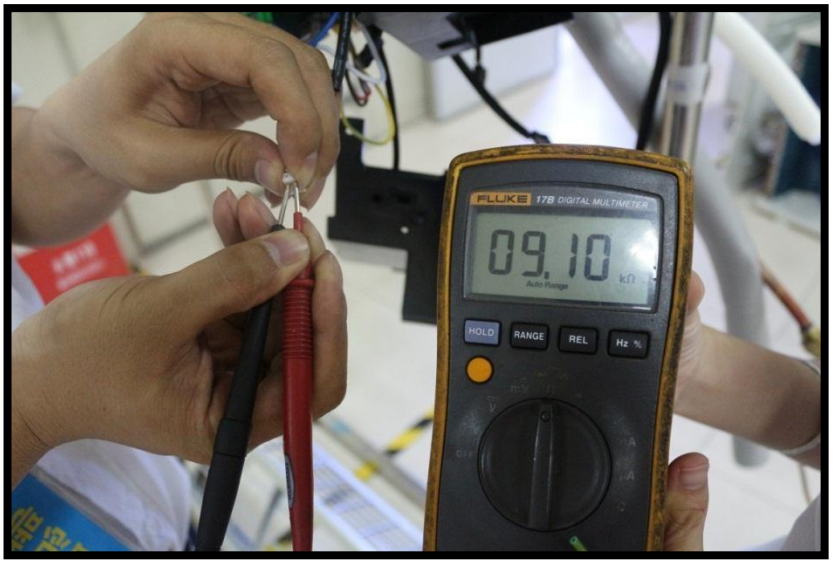

2.4.1.8 Communication malfunction between indoor and outdoor units
The same as E1 in outdoor.

2.4.2 Super-Slim Cassettes with an Up-Down Panel

2.4.2.1 Communication Errors between Indoor Unit and Up-Down Panel

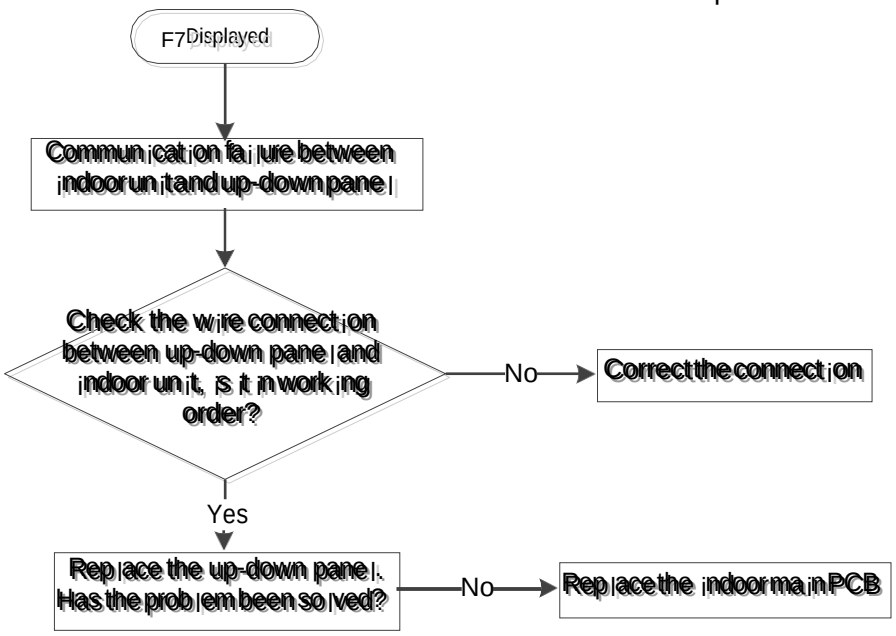

2.4.2.2 Up-down panel is defective

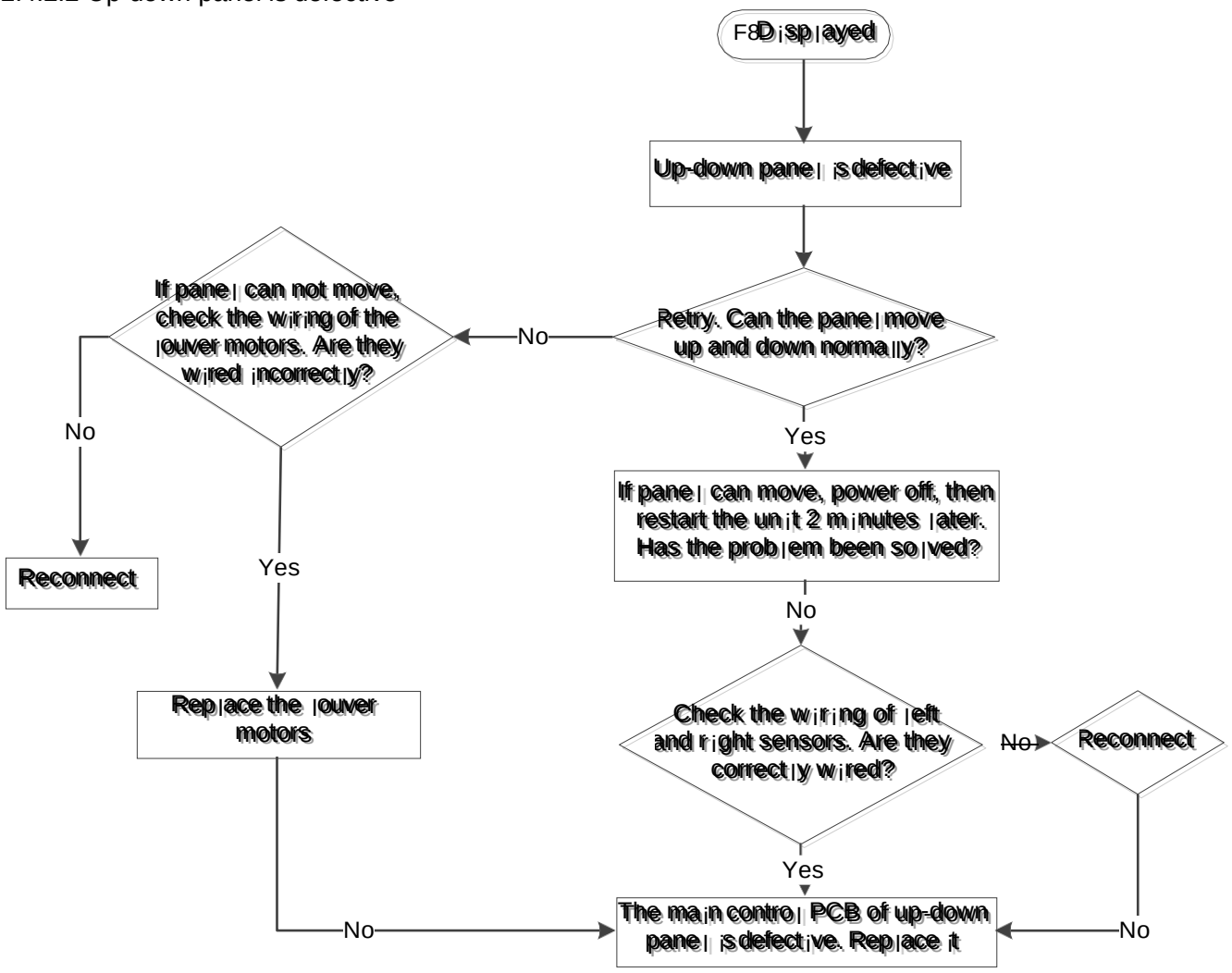

2.4.3 Units with TWINS Function (for the Super-Slim Cassette & A5 Duct)

2.4.3.1 Communication Malfunction between Master Unit and Indoor Unit

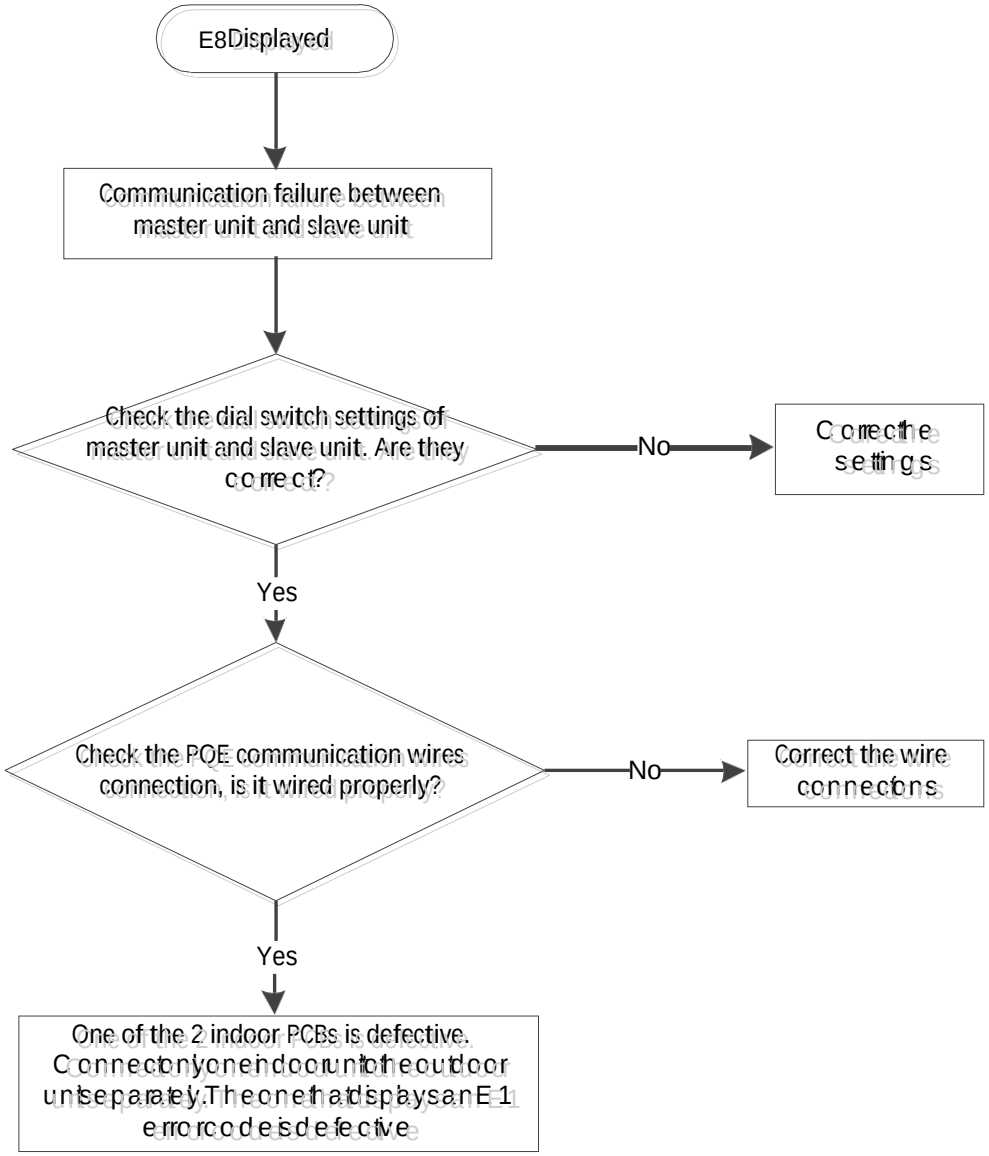

2.4.3.2 Other Malfunction between Master Unit and Indoor Unit

One indoor unit displays ”E9”, which means the other indoor unit is faulty. Check the other indoor unit’s error code and then follow the prescribed solutions to resolve the malfunction.

2.4.4 Outdoor Units

2.4.4.1. Compressor Driven Chip EEPROM Malfunction

Malfunction conditions	Main PCB chip does not receive feedback from EEPROM chip
Possible causes	• Installation mistakes • Faulty PCB

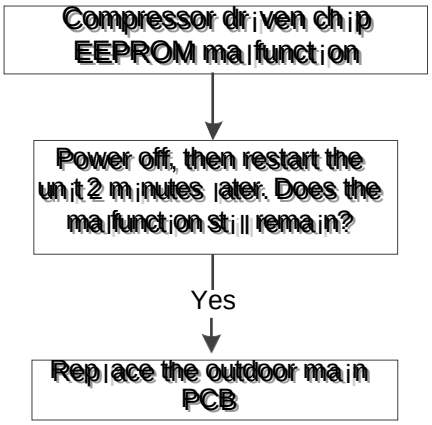

2.4.4.2 Compressor Speed Malfunction/ Zero Speed Protection / Synchronous Fault Protection

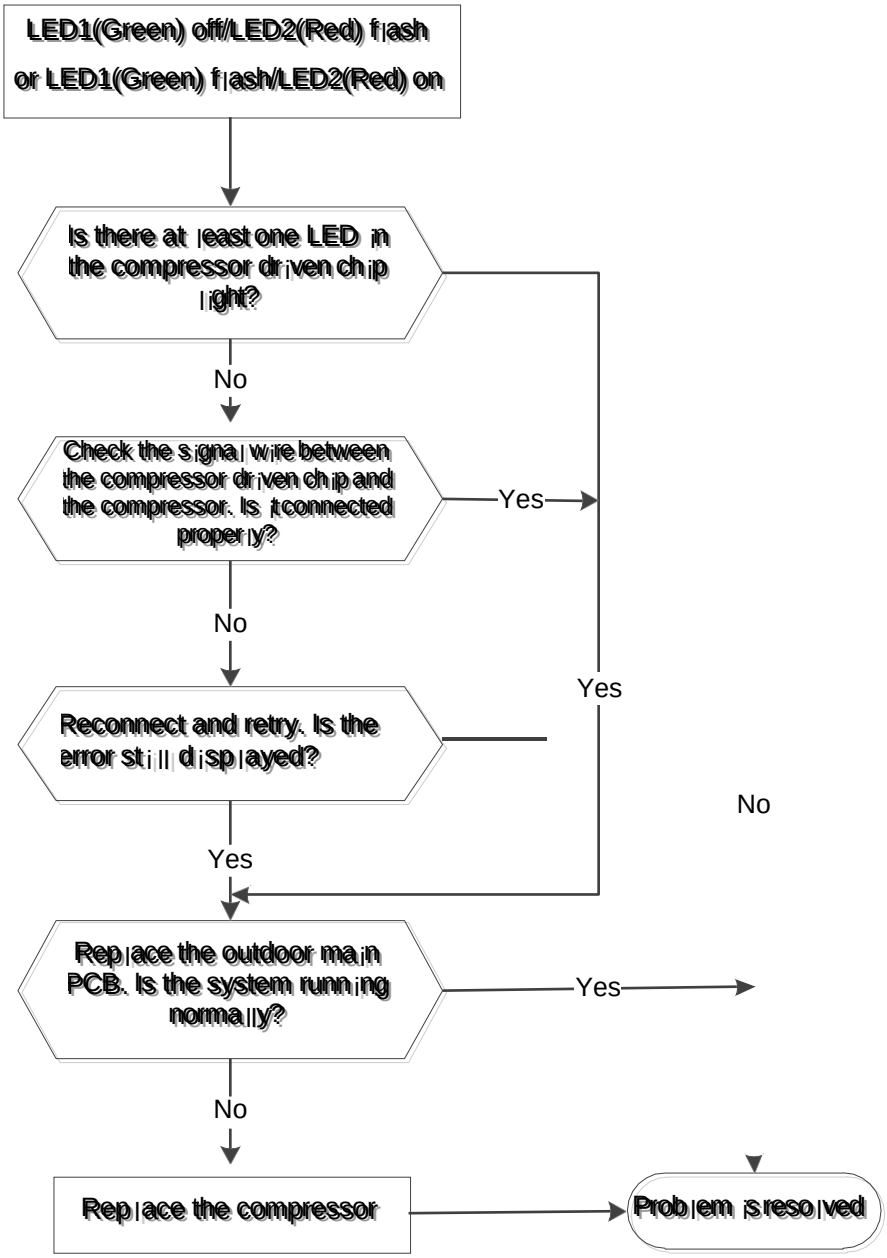

2.4.4.3 MCE Malfunction

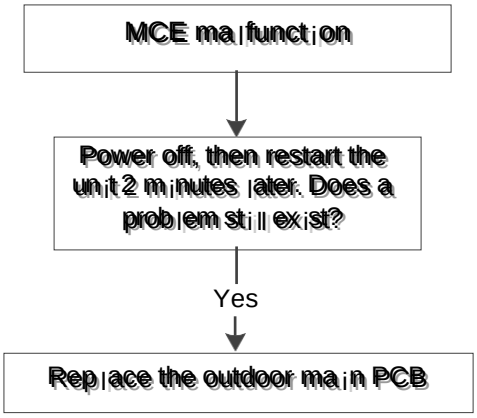

2.4.4.4. E1 malfunction
For 12K::

Malfunction conditions	Indoor unit does not receive feedback from outdoor unit for 110 seconds. This occurs 4 times in a row.
Possible causes	• Wiring mistakes • Faulty indoor or outdoor PCB

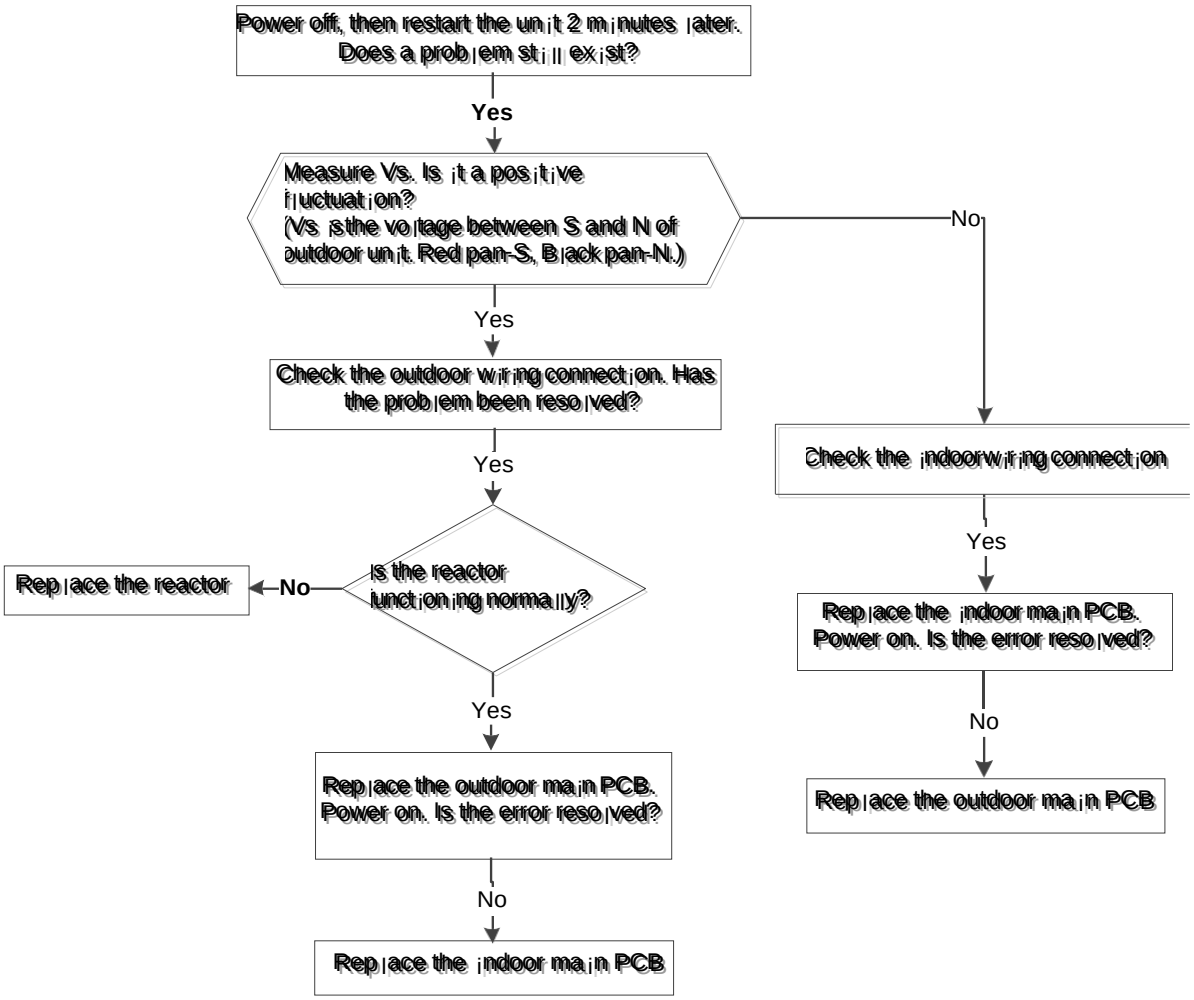

For 18-55K:

Malfunction conditions	Indoor unit does not receive feedback from outdoor unit for 60 seconds OR outdoor unit does not receive feedback from indoor unit for 120 seconds.
Possible causes	• Wiring mistakes • Faulty indoor or outdoor PCB

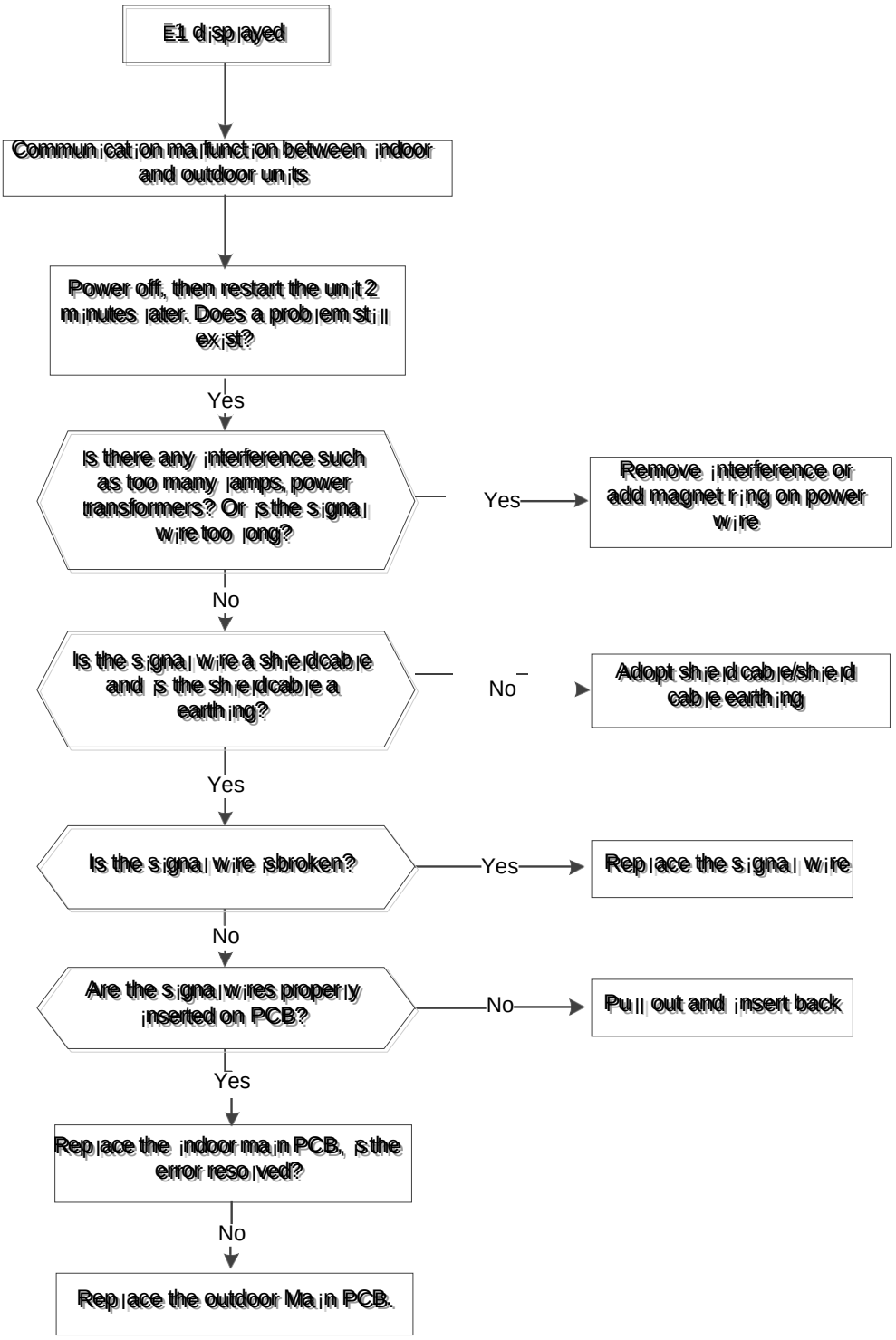

2.4.4.5. F0 Malfunction

Malfunction conditions	If the outdoor current exceeds the current limit value, the LED displays a failure code.
Possible causes	• Wiring mistakes • Faulty bridge rectifier • System blockages • Faulty outdoor PCB

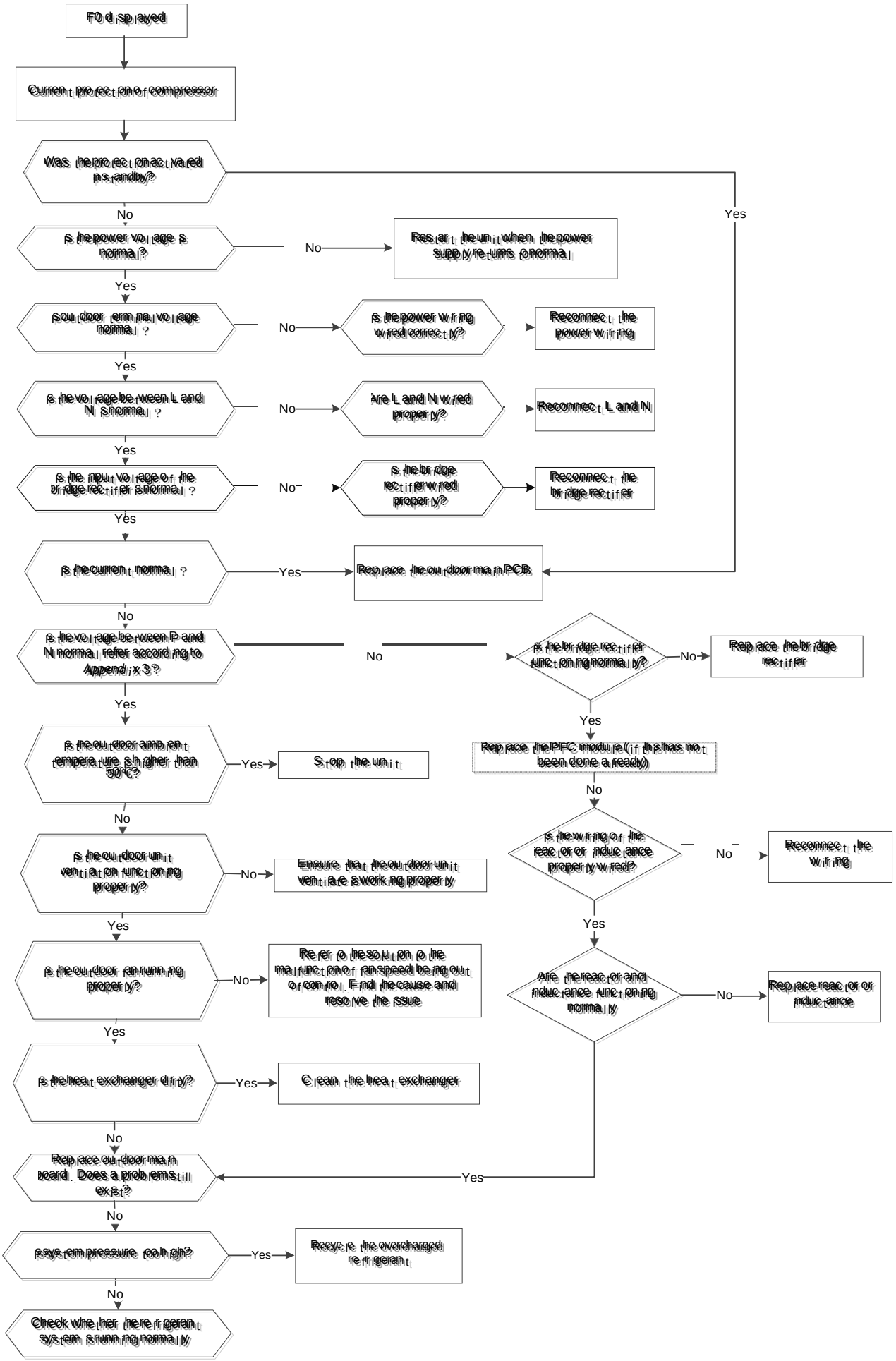
F0 displayed
Current protection of compressor
Was the protection activated in standby?
Yes
No
Is the power voltage is normal?
No
Restart the unit when the power supply returns to normal
Yes
Is outdoor terminal voltage normal?
No
Is the power wiring wired correctly?
Reconnect the power wiring
Yes
Is the voltage between L and N is normal?
No
Are L and N wired properly?
Reconnect L and N
Yes
Is the input voltage of the bridge rectifier is normal?
No
Is the bridge rectifier wired properly?
Reconnect the bridge rectifier
Yes
Is the current normal?
Yes
Replace the outdoor main PCB
No
Is the voltage between P and N normal, refer according to Appendix 3?
No
Is the bridge rectifier functioning normally?
No
Replace the bridge rectifier
Yes
Replace the PFC module (if it has not been done already)
Yes
Is the outdoor ambient temperature higher than 50°C?
Yes
Stop the unit
No
Is the wiring of the reactor or inductance properly wired?
No
Reconnect the wiring
Yes
Is the outdoor unit ventilation functioning properly?
No
Ensure that the outdoor unit ventilate is working properly
Yes
Are the reactor and inductance functioning normally
No
Replace reactor or inductance
Is the outdoor fan running properly?
No
Refer to the solution to the malfunction of fan speed being out of control. Find the cause and resolve the issue
Yes
Is the heat exchanger dirty?
Yes
Clean the heat exchanger
No
Replace outdoor main board. Does a problem still exist?
Yes
No
Is system pressure too high?
Yes
Recycle the overcharged refrigerant
No
Check whether the refrigerant system is running normally

2.4.4.6. F1, F2, F3 Malfunction

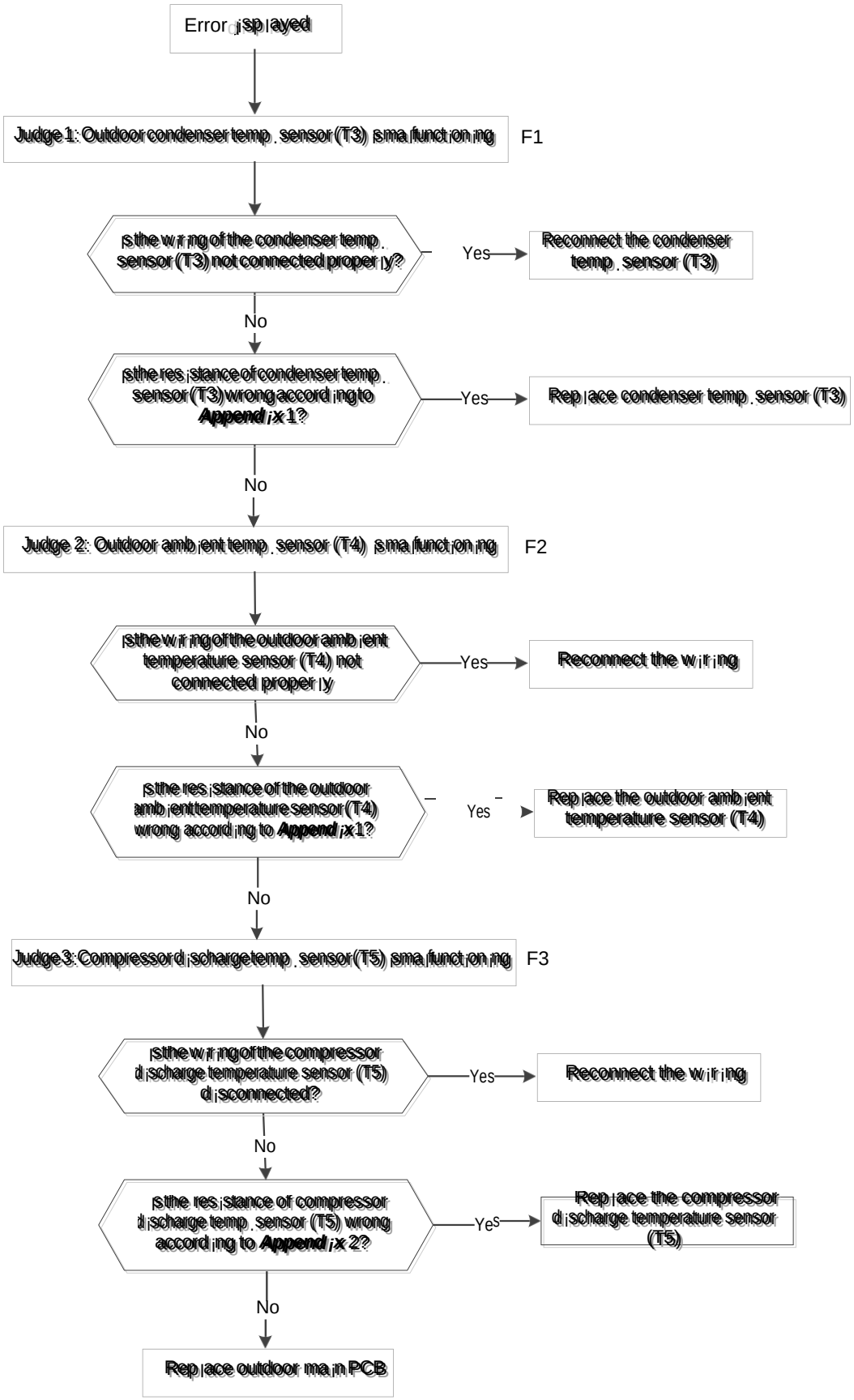

2.4.4.7. F4 Malfunction

Malfunction conditions	Main PCB chip does not receive feedback from EEPROM chip
Possible causes	• Installation mistakes • Faulty PCB

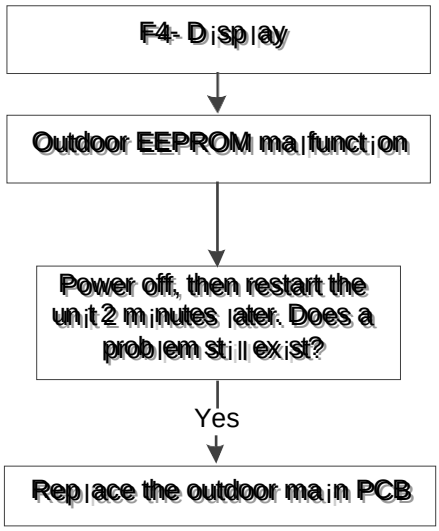

EEPROM: An electrically erasable programmable read-only memory whose contents can be erased and reprogrammed using a pulsed voltage.

2.4.4.8. F5 Malfunction
The same as E3 in indoor unit.

2.4.4.9. P0 Malfunction

Malfunction conditions	When the voltage signal te IPM sends to compressor drive chip is not normal, the LED displays “P0” and the unit turns off.
Possible causes	• Wiring mistakes • Faulty IPM board • Faulty outdoor fan assemby • Compressor malfunction • Faulty outdoor PCB

First, test the resistance between every two ports of U, V, the W of the IPM and P, N. If any of the results is 0 or close to 0, the IPM is defective. If not, follow the following procedure:

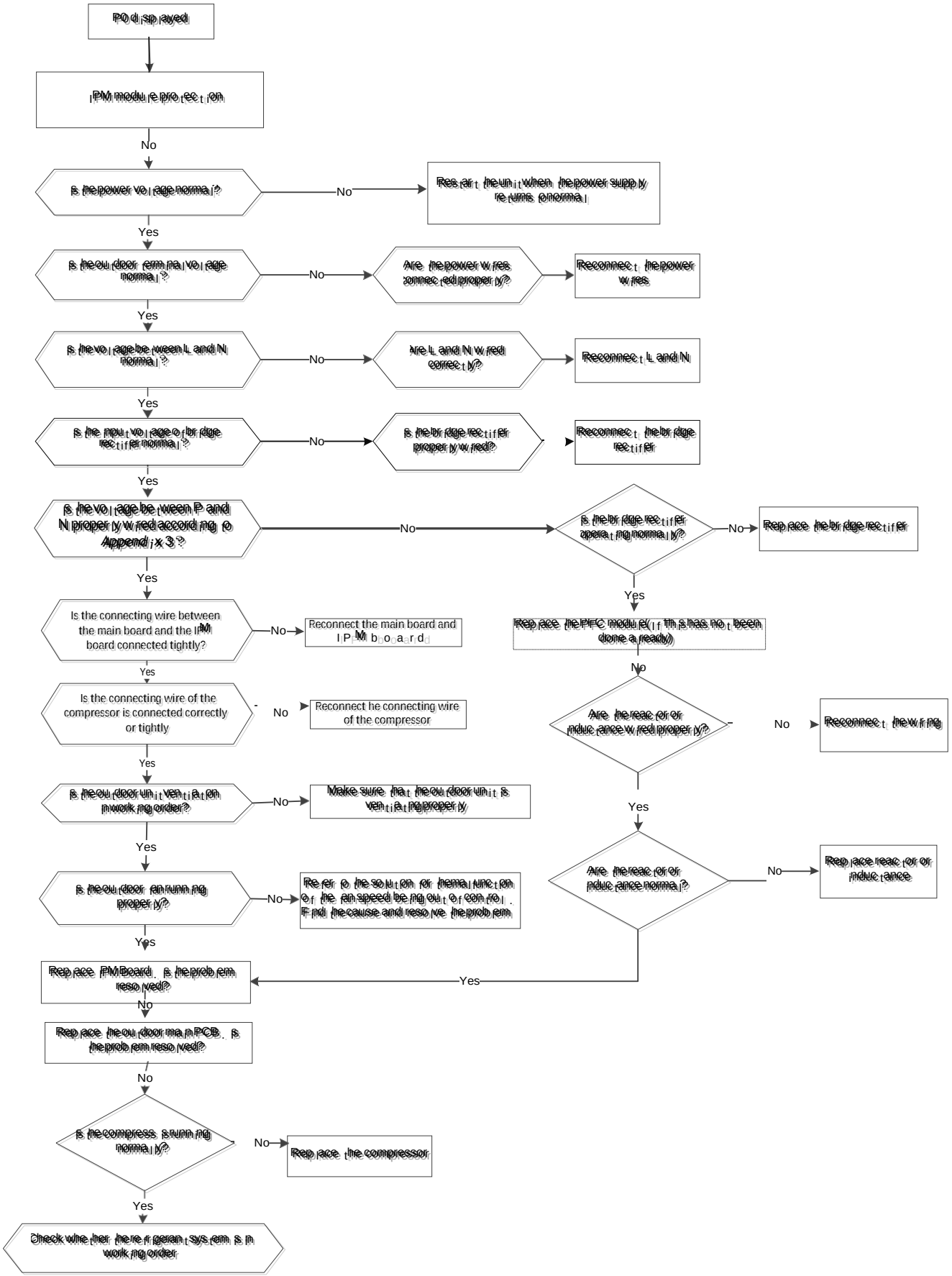
P0 displayed
IPM module protection
No
Is the power voltage normal?
No
Restart the unit when the power supply returns to normal
Yes
Is the outdoor terminal voltage normal?
No
Are the power wires connected properly?
Reconnect the power wires
Yes
Is the voltage between L and N normal?
No
Are L and N wired correctly?
Reconnect L and N
Yes
Is the input voltage of bridge rectifier normal?
No
Is the bridge rectifier properly wired?
Reconnect the bridge rectifier
Yes
Is the voltage between P and N properly wired according to Appendix 3?
No
Is the bridge rectifier operating normally?
No
Replace the bridge rectifier
Yes
Is the connecting wire between the main board and the IPM board connected tightly?
No
Reconnect the main board and IPM board
Yes
Is the connecting wire of the compressor is connected correctly or tightly
No
Reconnect he connecting wire of the compressor
Yes
Is the outdoor unit ventilation in working order?
No
Make sure that the outdoor unit is ventilating properly
Yes
Is the outdoor fan running properly?
No
Refer to the solution for the malfunction of the fan speed being out of control. Find the cause and resolve the problem
Yes
Replace IPM Board. Is the problem resolved?
No
Replace the outdoor main PCB. Is the problem resolved?
No
Is the compressor running normally?
No
Replace the compressor
Yes
Check whether the refrigerant system is in working order
Replace the PFC module (If this has not been done already)
No
Are the reactor or inductance wired properly?
No
Reconnect the wiring
Yes
Are the reactor or inductance normal?
No
Replace reactor or inductance
Yes

2.4.4.10. P1 malfunction

Malfunction decision conditions	An abnormal voltage rise or drop is detected by checking the specified voltage detection circuit.
Supposed causes	Abnormal power supply Wiring mistake Faulty bridge rectifier Faulty IPM board

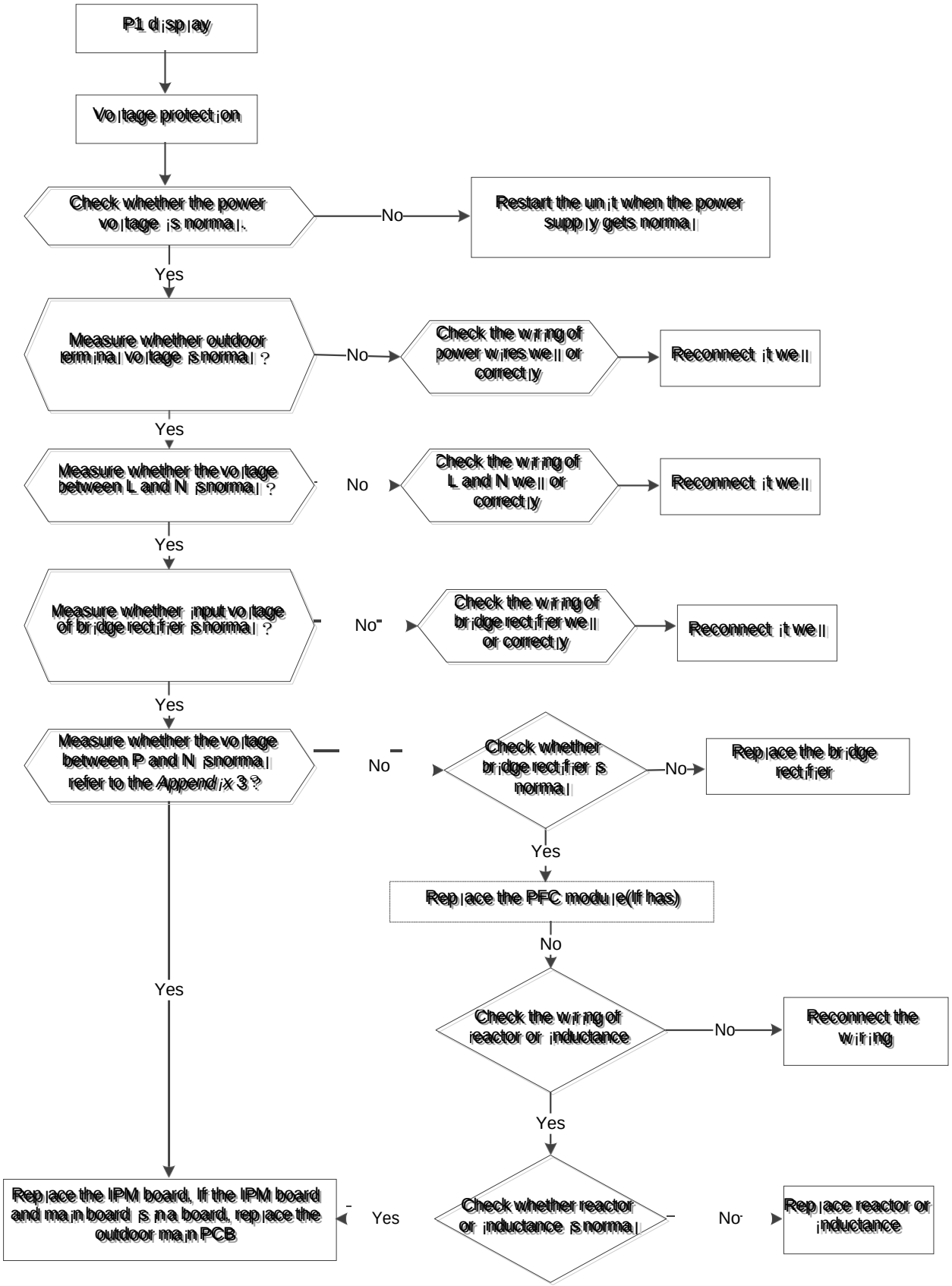

2.4.4.11. P4 Malfunction

The troubleshooting is same as the “IPM module protection”

2.4.4.12. J0 Malfunction

Malfunction conditions	When evaporator coil temperature is more than 60°C, the unit stops. It starts again only when the evaporator coil temperature is less than 54°C
Possible causes	☐ Faulty evaporator coil temperature sensor ☐ Dirty heat exchanger ☐ Faulty fan ☐ Faulty PCB

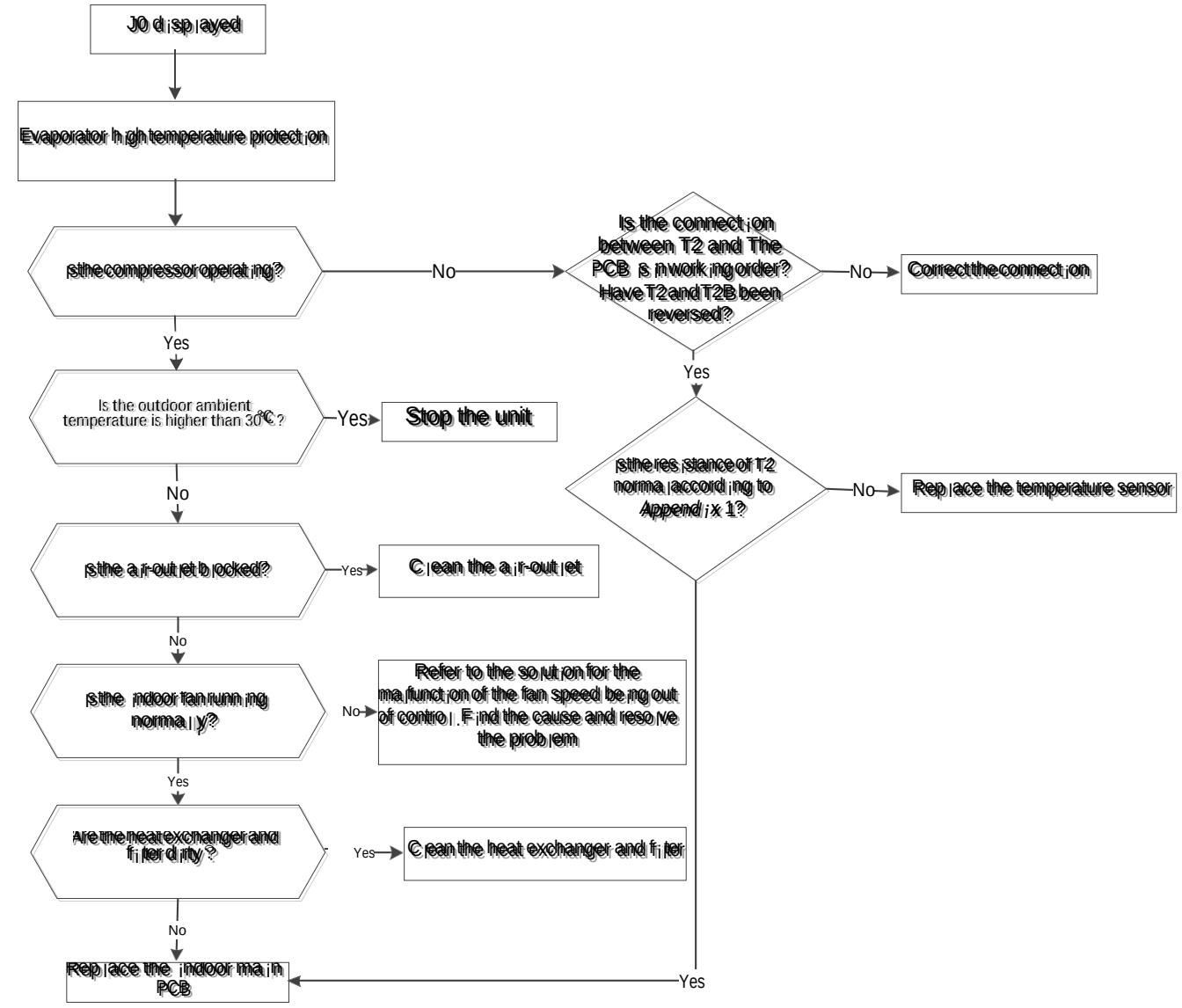

2.4.4.13. J1 Malfunction

Malfunction conditions	When the outdoor pipe temperature is more than 65°C, the unit stops. It starts again only when the outdoor pipe temperature is less than 52°C.
Possible causes	• Faulty condenser temperature sensor • Dirty heat exchanger • System leakage or blockages

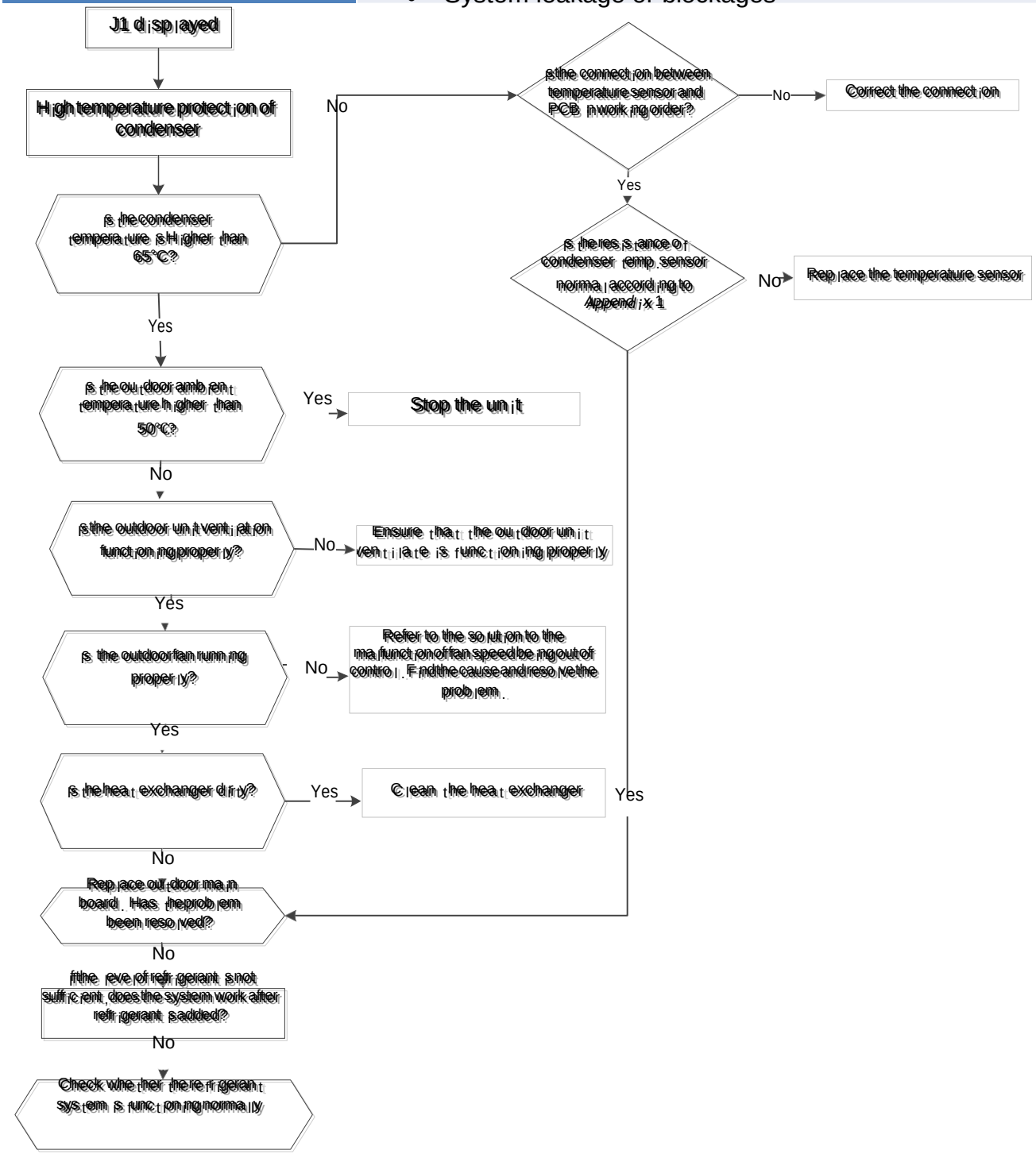

2.4.4.14. J2 Malfunction

Malfunction conditions	When the compressor discharge temperature (T5) is more than 115℃ for 10 seconds, the compressor will stop and not restart until T5 is less than 90℃.
Possible causes	• Refrigerant leakage • Wiring mistake • Faulty discharge temperature sensor • Faulty outdoor PCB

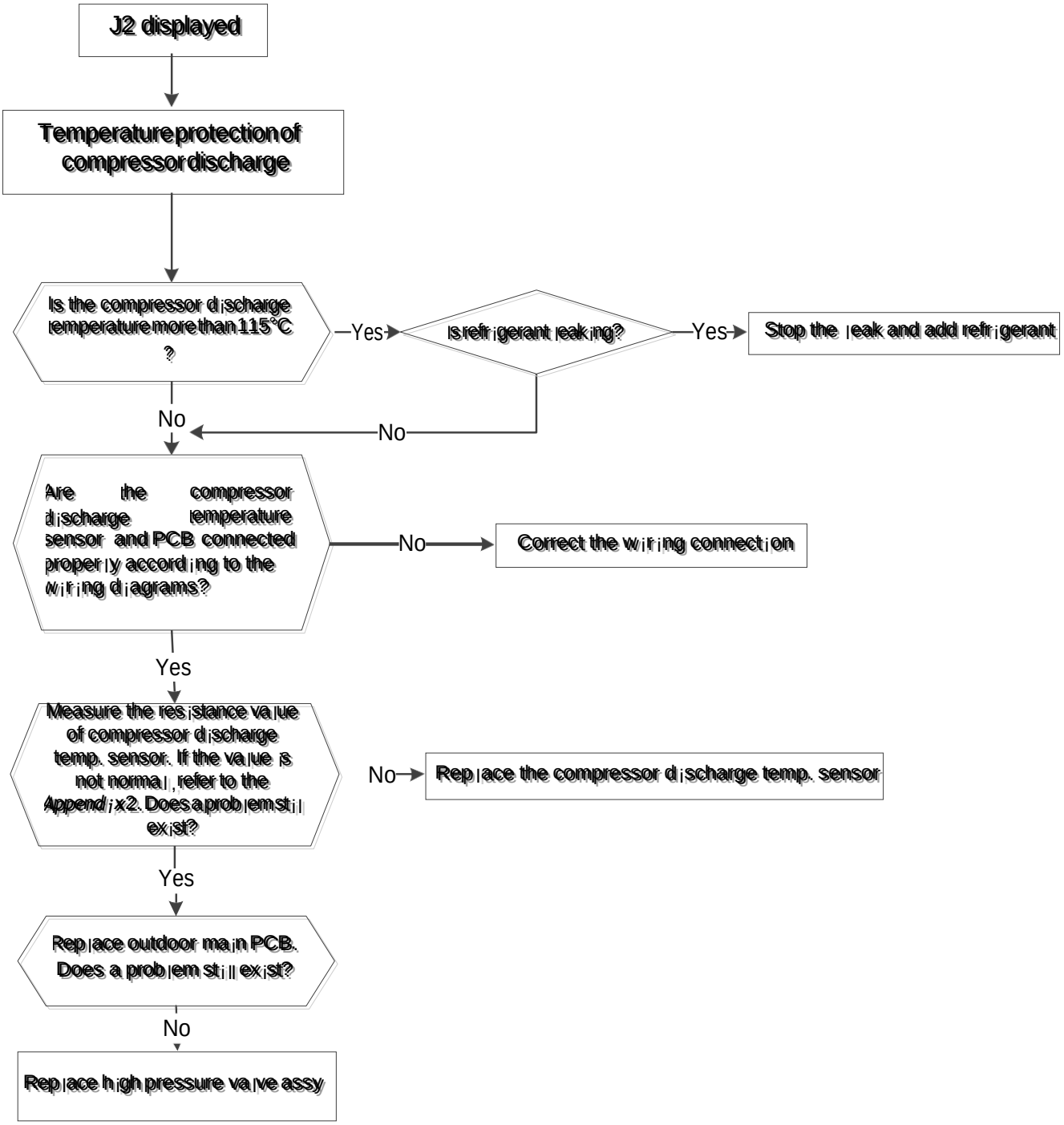

2.4.4.15. J3 Malfunction

Malfunction decision conditions	When the voltage signal that IPM send to compressor drive chip is abnormal, the display LED will show “J3” and AC will turn off.
Supposed causes	• Wiring mistake • Faulty IPM board • Faulty outdoor fan ass’y • Compressor malfunction • Faulty outdoor PCB

At first test the resistance between every two ports of U, V, W of IPM and P, N. If any result of them is 0 or close to 0, the IPM is defective. Otherwise, please follow the procedure below:

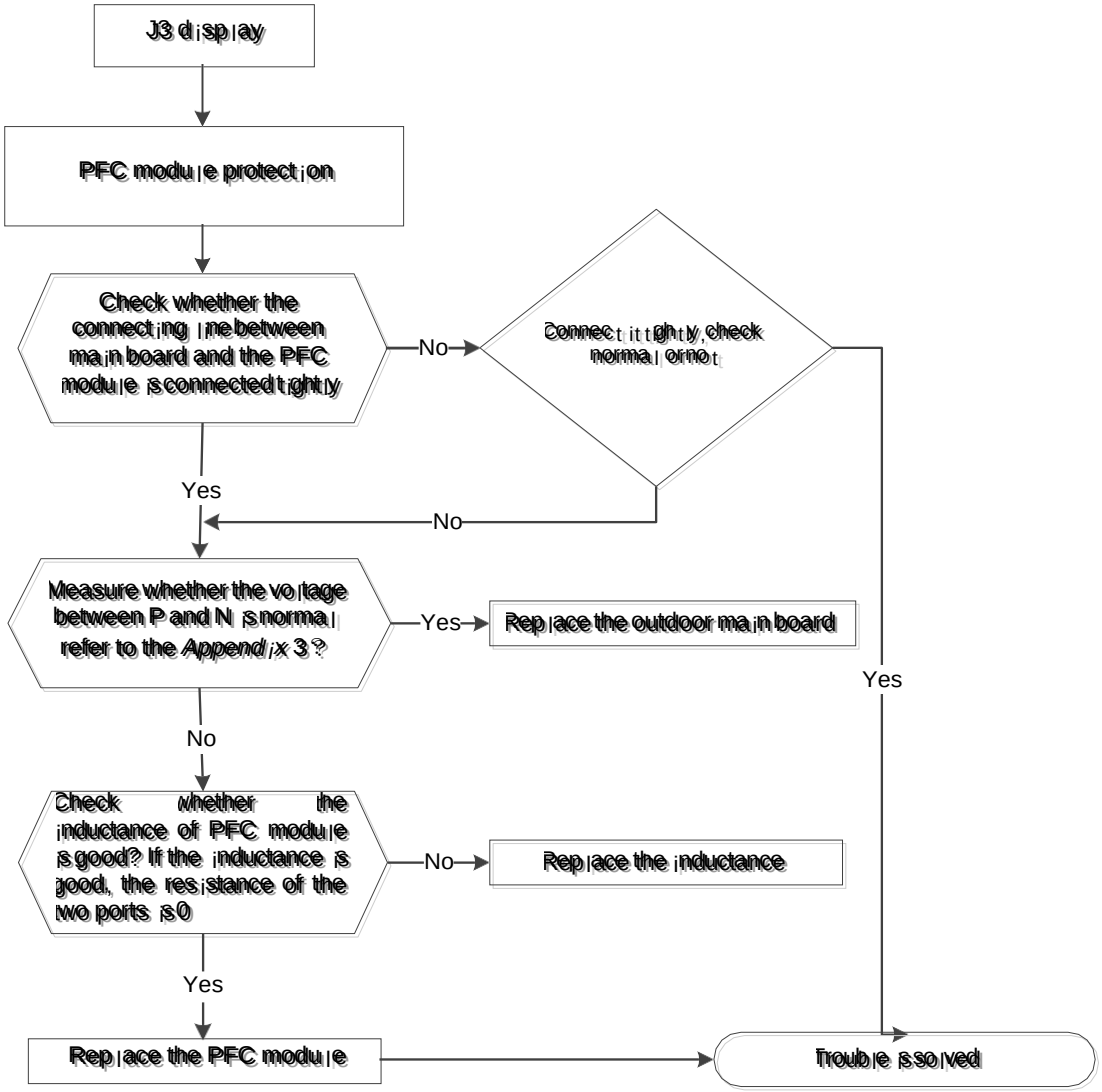

2.4.4.16. J4 Malfunction

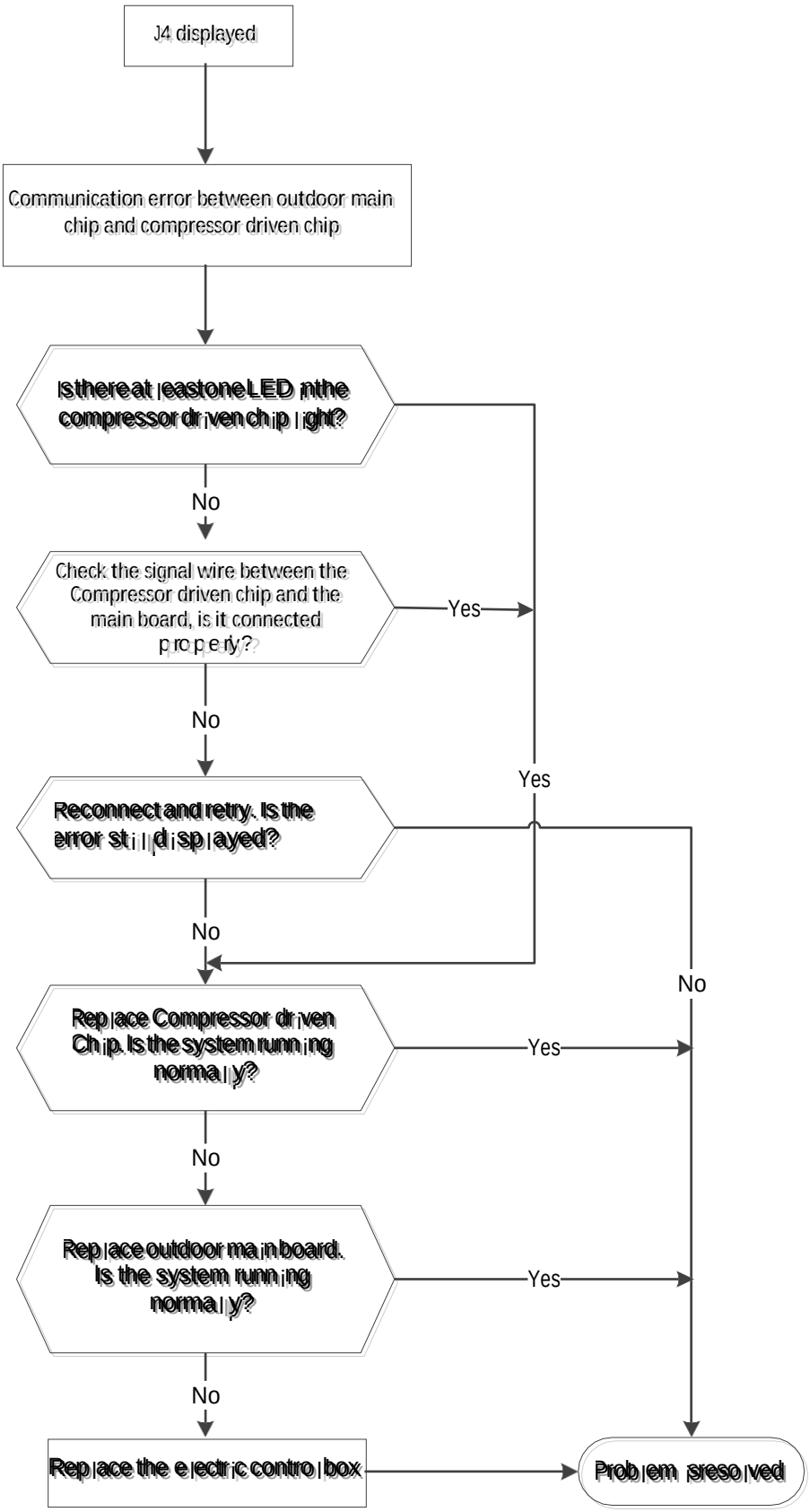

2.4.4.17. J5 Malfunction

Malfunction conditions	If the sampling voltage is not 5V, the LED displays a failure code.
Possible causes	• Wiring mistakes • Faulty overload protector • System blockages • Faulty outdoor PCB

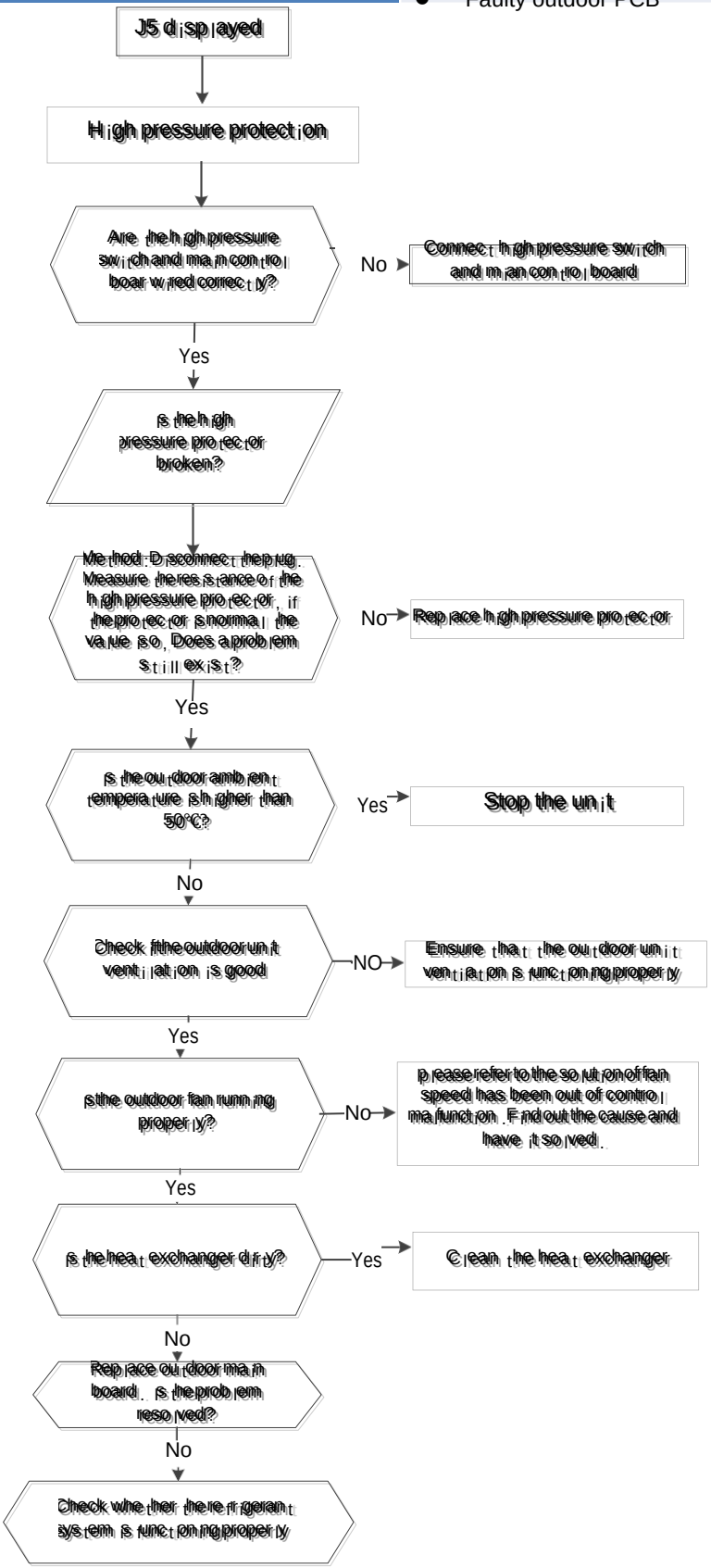

2.4.4.18. P6/J6 Malfunction

Malfunction conditions	If the sampling voltage is not 5V, the LED displays a failure code.
Possible causes	• Wiring mistake • Faulty over load protector • System blockages • Faulty outdoor PCB

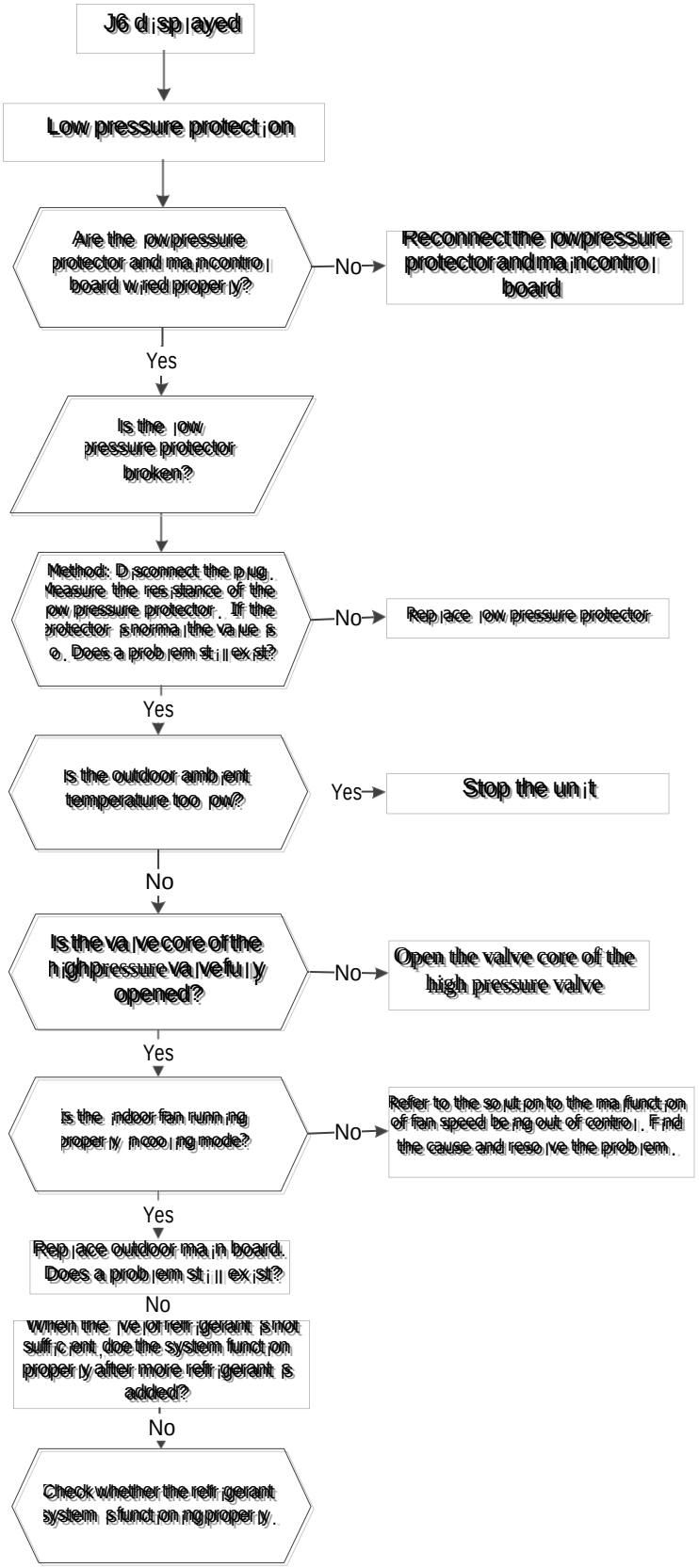

2.4.4.19. J8 malfunction

Malfunction decision conditions	An abnormal voltage rise or drop is detected by checking the specified voltage detection circuit.
Supposed causes	Abnormal power supply Wiring mistake Faulty bridge rectifier Faulty IPM board

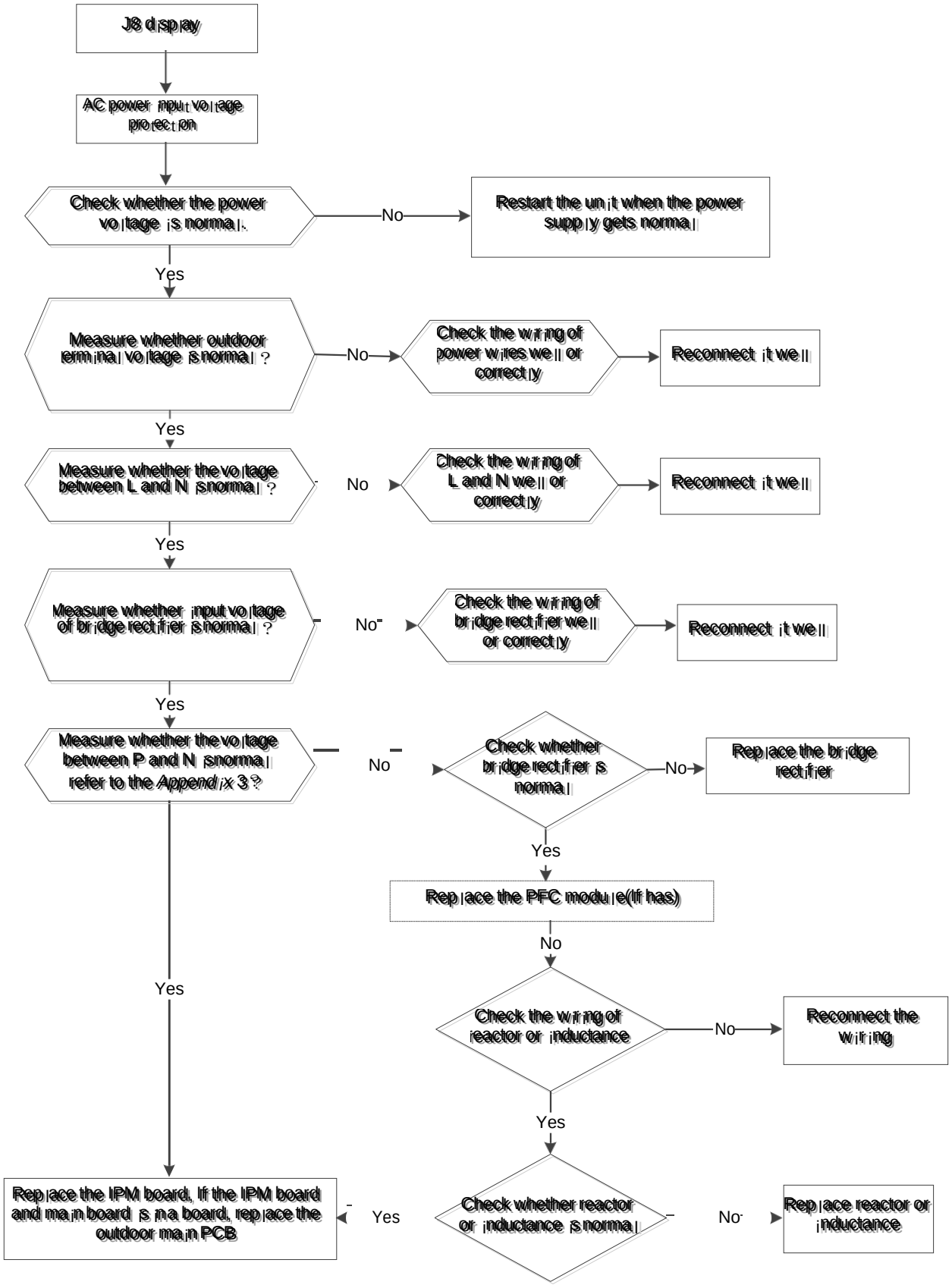

Appendix 1 Temperature Sensor Resistance Value Table (℃--K)

℃	**K Ohm**	℃	**K Ohm**	℃	**K Ohm**	℃	**K Ohm**
-20	115.266	20	12.6431	60	2.35774	100	0.62973
-19	108.146	21	12.0561	61	2.27249	101	0.61148
-18	101.517	22	11.5000	62	2.19073	102	0.59386
-17	96.3423	23	10.9731	63	2.11241	103	0.57683
-16	89.5865	24	10.4736	64	2.03732	104	0.56038
-15	84.2190	25	10.000	65	1.96532	105	0.54448
-14	79.3110	26	9.55074	66	1.89627	106	0.52912
-13	74.5360	27	9.12445	67	1.83003	107	0.51426
-12	70.1698	28	8.71983	68	1.76647	108	0.49989
-11	66.0898	29	8.33566	69	1.70547	109	0.48600
-10	62.2756	30	7.97078	70	1.64691	110	0.47256
-9	58.7079	31	7.62411	71	1.59068	111	0.45957
-8	56.3694	32	7.29464	72	1.53668	112	0.44699
-7	52.2438	33	6.98142	73	1.48481	113	0.43482
-6	49.3161	34	6.68355	74	1.43498	114	0.42304
-5	46.5725	35	6.40021	75	1.38703	115	0.41164
-4	44.0000	36	6.13059	76	1.34105	116	0.40060
-3	41.5878	37	5.87359	77	1.29078	117	0.38991
-2	39.8239	38	5.62961	78	1.25423	118	0.37956
-1	37.1988	39	5.39689	79	1.21330	119	0.36954
0	35.2024	40	5.17519	80	1.17393	120	0.35982
1	33.3269	41	4.96392	81	1.13604	121	0.35042
2	31.5635	42	4.76253	82	1.09958	122	0.3413
3	29.9058	43	4.57050	83	1.06448	123	0.33246
4	28.3459	44	4.38736	84	1.03069	124	0.32390
5	26.8778	45	4.21263	85	0.99815	125	0.31559
6	25.4954	46	4.04589	86	0.96681	126	0.30754
7	24.1932	47	3.88673	87	0.93662	127	0.29974
8	22.5662	48	3.73476	88	0.90753	128	0.29216
9	21.8094	49	3.58962	89	0.87950	129	0.28482
10	20.7184	50	3.45097	90	0.85248	130	0.27770
11	19.6891	51	3.31847	91	0.82643	131	0.27078
12	18.7177	52	3.19183	92	0.80132	132	0.26408
13	17.8005	53	3.07075	93	0.77709	133	0.25757
14	16.9341	54	2.95896	94	0.75373	134	0.25125
15	16.1156	55	2.84421	95	0.73119	135	0.24512
16	15.3418	56	2.73823	96	0.70944	136	0.23916
17	14.6181	57	2.63682	97	0.68844	137	0.23338
18	13.9180	58	2.53973	98	0.66818	138	0.22776
19	13.2631	59	2.44677	99	0.64862	139	0.22231

Appendix 2

Unit: ℃---K			Discharge temperature sensor table				
-20	542.7	20	68.66	60	13.59	100	3.702
-19	511.9	21	65.62	61	13.11	101	3.595
-18	483	22	62.73	62	12.65	102	3.492
-17	455.9	23	59.98	63	12.21	103	3.392
-16	430.5	24	57.37	64	11.79	104	3.296
-15	406.7	25	54.89	65	11.38	105	3.203
-14	384.3	26	52.53	66	10.99	106	3.113
-13	363.3	27	50.28	67	10.61	107	3.025
-12	343.6	28	48.14	68	10.25	108	2.941
-11	325.1	29	46.11	69	9.902	109	2.86
-10	307.7	30	44.17	70	9.569	110	2.781
-9	291.3	31	42.33	71	9.248	111	2.704
-8	275.9	32	40.57	72	8.94	112	2.63
-7	261.4	33	38.89	73	8.643	113	2.559
-6	247.8	34	37.3	74	8.358	114	2.489
-5	234.9	35	35.78	75	8.084	115	2.422
-4	222.8	36	34.32	76	7.82	116	2.357
-3	211.4	37	32.94	77	7.566	117	2.294
-2	200.7	38	31.62	78	7.321	118	2.233
-1	190.5	39	30.36	79	7.086	119	2.174
0	180.9	40	29.15	80	6.859	120	2.117
1	171.9	41	28	81	6.641	121	2.061
2	163.3	42	26.9	82	6.43	122	2.007
3	155.2	43	25.86	83	6.228	123	1.955
4	147.6	44	24.85	84	6.033	124	1.905
5	140.4	45	23.89	85	5.844	125	1.856
6	133.5	46	22.89	86	5.663	126	1.808
7	127.1	47	22.1	87	5.488	127	1.762
8	121	48	21.26	88	5.32	128	1.717
9	115.2	49	20.46	89	5.157	129	1.674
10	109.8	50	19.69	90	5	130	1.632
11	104.6	51	18.96	91	4.849		
12	99.69	52	18.26	92	4.703		
13	95.05	53	17.58	93	4.562		
14	90.66	54	16.94	94	4.426		
15	86.49	55	16.32	95	4.294	B(25/50)=3950K	
16	82.54	56	15.73	96	4.167		
17	78.79	57	15.16	97	4.045	R(90℃)=5KΩ±3%	
18	75.24	58	14.62	98	3.927		
19	71.86	59	14.09	99	3.812		

Appendix 3

Normal voltage of P and N			
208-240V(1-phase,3-phase)			380-415V(3-phase)
In standby			
around 310VDC			around 530VDC
In operation			
With passive PFC module	With partial active PFC module	With fully active PFC module	/
>200VDC	>310VDC	>370VDC	>450VDC

3. Controller

3.1Wireless Remote Controller

3.1.1RG51Q1/BGE

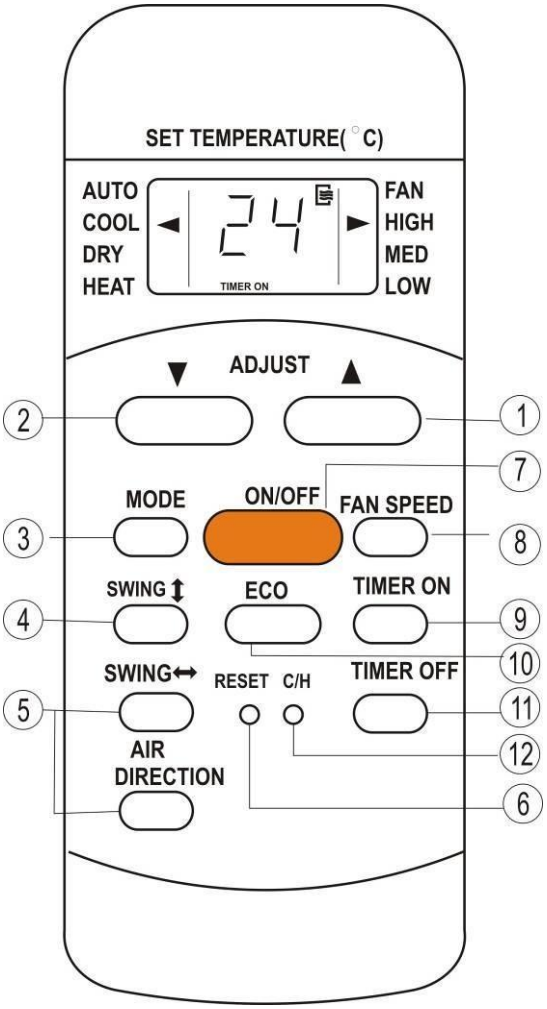

General Function for wireless remote controller:

Model	RG51Q1/BGE
Rated voltage	3.0V(2pieces of LR03 7＃ batteries)
Min voltage for sending signal of CPU	2.4V
Effective receiving distance	8m~11m
Operation condition	-5~60℃

Buttons and functions

1. Adjust ▼ : Decrease the set temperature Keeping pressing will decrease the temp with 1℃per 0.5s.

2. Adjust ▲ : Increase the set temperature Keeping pressing will increase the temp with 1℃ per 0.5s.

3. MODE: Once pressing, running mode will be selected in the following sequence:

AUTO → COOL → DRY → HEAT → FAN

NOTE: No heating mode for cool only type unit.

4. VERT SWING: Used to stop or start horizontal louver movement or set the desired up/down air flow direction. The louver changes 6 degree in angle for each press. If keep pushing more than 2 seconds, the louver will swing up and down automatically.

5. HORIZ SWING: Used to stop or start vertical louver movement.

6. AIR DIRECTION: Used to set the desired up/down air flow direction. The louver changes 6 degree in angle for each press.

7. ON/OFF: For turning on or turning off the air conditioner.

8. FAN SPEED: Fan speed will be selected in following sequence once pressing this button:

AUTO → LOW → MED → HIGH

9. TIME ON: For time ON setting. Once pressing this button, the time will increase by 0.5 hour. When the set time exceeds 10 hours, pressing the button will increase the time by 1 hour. Adjusting the figure to 0.00 will cancel time ON setting.

10. ECO: Activate or turn off economic operation mode. It is suggested to turn on this function when sleeping. (Only available when remote controller is used with corresponding unit.)

11. TIME OFF: For time OFF setting. Once pressing this button, the time will increase by 0.5 hour. When the set time exceeds 10 hours, pressing the button will increase the time by 1 hour.

Adjust the figure to 0.00 will cancel time ON setting.

12. C/H (inner located): Press this button with a needle of 1mm to shift the mode between Cooling only and Cooling & Heating according to the feature of the machine.

13.RESET (inner located): Press this button with a needle of 1mm to cancel the current setting and reset remote controller.

3.1.2 RG51C/E

Remote Controller Specifications

Model	RG51C/E
Rated Voltage	3.0V(2pieces of LR03 7＃ batteries)
Lowest Voltage of CPU Emitting Signal	2.0V
Reaching Distance	8m (when using 3.0 voltage, it can get 11m)
Environment Temperature Range	-5℃～60℃

Introduction of Function Buttons on the Remote Controller

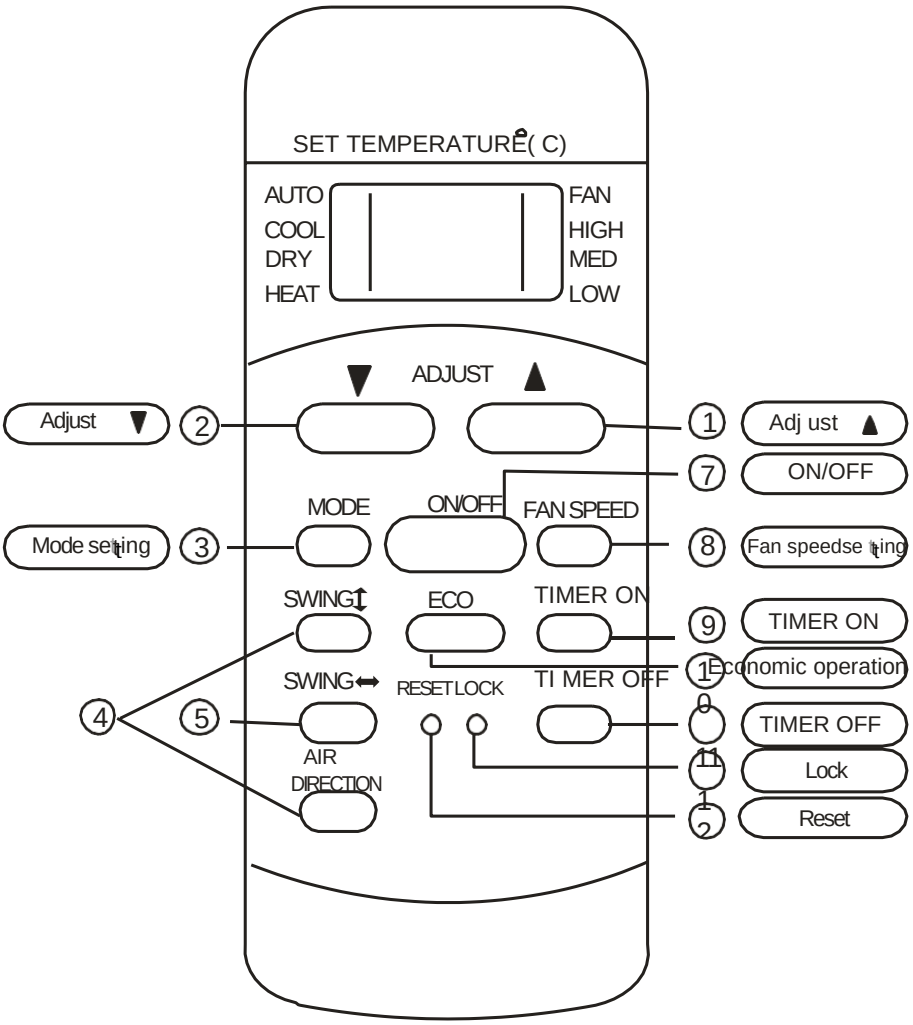

1. Adjust ▼ : Decrease the set temperature Keeping pressing will decrease the temp with 1℃per 0.5s.

2. Adjust ▲ : Increase the set temperature Keeping pressing will increase the temp with 1℃ per 0.5s.

3. MODE: Once pressing, running mode will be selected in the following sequence:

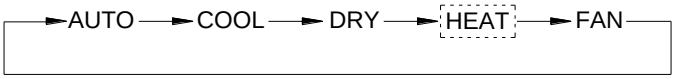

NOTE: No heating mode for cool only type unit.

4. VERT SWING: Used to stop or start horizontal louver movement. The louver will swing up and down automatically if push this button.

AIR DIRECTION: Used to set the desired up/down air flow direction. The louver changes 6 degree in angle for each press.

5. HORIZ SWING: Used to stop or start vertical louver movement.

6. FAN SPEED+ MODE: Press the Mode and Fan speed button simultaneously for 2 seconds. The remote

controls into faceplate setting state and the LCD shows F2.Press the ▲) to control the faceplate up and press the TEMP DOWN(▼) to control the faceplate down. Press any button to exit the faceplate setting state, then the LCD back to the normal display.

7. ON/OFF: For turning on or turning off the air conditioner.

8. FAN SPEED: Fan speed will be selected in following sequence once pressing this button:

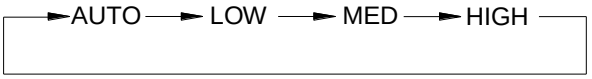

9. TIME ON: For time ON setting. Once pressing this button, the time will increase by 0.5 hour. When the set time exceeds 10 hours, pressing the button will increase the time by 1 hour. Adjusting the figure to 0.00 will cancel time ON setting.

10. ECO: Select this function during the sleeping time. It can maintain the most comfortable temperature

and save energy. This function is available on COOL, HEAT or AUTO mode only .

NOTE: While the unit is running under Energy-saving mode, it would be cancelled if press MODE, FAN SPEED or ON/OFF button.

11. TIME OFF: For time OFF setting. Once pressing this button, the time will increase by 0.5 hour. When the set time exceeds 10 hours, pressing the button will increase the time by 1 hour.

Adjust the figure to 0.00 will cancel time ON setting.

12. LOCK (inner located): Push this button to lock in all the current settings, and the remote controller will not accept any operation except that of the LOCK. Use the LOCK mode when you want to prevent settings

from being changed accidentally. Press the LOCK button again to cancel the LOCK function. A lock symbol will appear on the remote controller display when the lock function is activated.

13.RESET (inner located): Once the recessed RESET button is pressed, all of the current settings will be cancelled and the controller will return to the initial settings..

3.1.3 R51M/(C)E

Remote Controller Specifications

Model	R51M/(C)E
Rated Voltage	3.0V
Reaching Distance	8m
Environment Temperature Range	-5℃～60℃

Introduction of Function Buttons on the Remote Controller

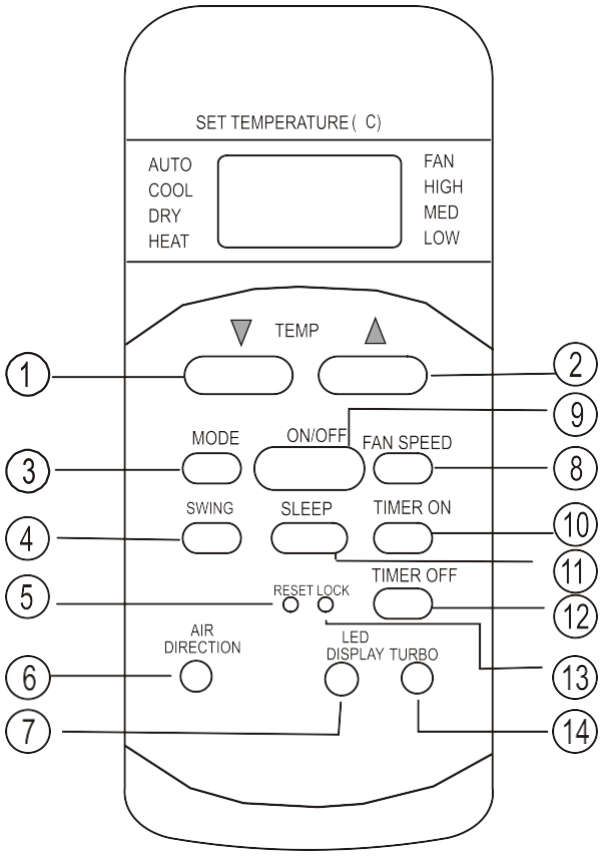

1. Adjust ▼ : Decrease the set temperature Keeping pressing will decrease the temp with 1℃per 0.5s.

2. Adjust ▲ : Increase the set temperature Keeping pressing will increase the temp with 1℃ per 0.5s.

3. MODE: Once pressing, running mode will be selected in the following sequence:

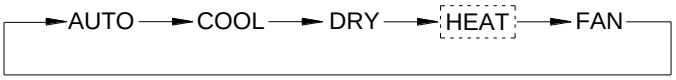

NOTE: No heating mode for cool only type unit.

4. SWING: Used to stop or start horizontal louver movement. The louver will swing up and down automatically if push this button.

5. RESET (inner located): Once the recessed RESET button is pressed, all of the current settings will be cancelled and the controller will return to the initial settings.

6. AIR DIRECTION: P Press this button to change the swing angle of the louver. The swing angle of the louver is 6o for each press. When the louver swing at a certain angle which would affect the cooling and heating effect of the air conditioner, it would automatically change the swing direction . No symbol will appear in the display area when press this button. (Not applicable to units without this function).

7. LED: Press this button to clear the digit display in the air conditioner, press it again to activate it (Not available for the units without LED display window).

8. FAN SPEED: Fan speed will be selected in following sequence once pressing this button:

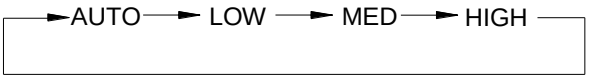

9. ON/OFF: For turning on or turning off the air conditioner

10. TIME ON: For time ON setting. Once pressing this button, the time will increase by 0.5 hour. When the set time exceeds 10 hours, pressing the button will increase the time by 1 hour. Adjusting the figure to 0.00 will cancel time ON setting.

11.SLEEP: Press this button to go into the Energy-Saving operation mode. Press it again to cancel. This function is only can be used on COOL, HEAT and AUTO mode and maintain the most comfortable temperature for you.

12. TIME OFF: For time OFF setting. Once pressing this button, the time will increase by 0.5 hour. When the set time exceeds 10 hours, pressing the button will increase the time by 1 hour.

Adjust the figure to 0.00 will cancel time ON setting.

13. LOCK (inner located): Push this button to lock in all the current settings, and the remote controller will not accept any operation except that of the LOCK. Use the LOCK mode when you want to prevent settings

from being changed accidentally. Press the LOCK button again to cancel the LOCK function. A lock symbol will appear on the remote controller display when the lock function is activated.

14. TURBO: Push this button to activate/cancel the Turbo function which enables the unit to reach the preset temperature in the shortest time. On cooling mode, the unit will blow strong cooling air with super high fan speed. On heating mode (applicable to the unit adopts PTC only), the PTC will bring fast heating operation.

3.2 Wired Remote Controller
3.2.1 KJR-12B

Name and functions of buttons on the wire controller

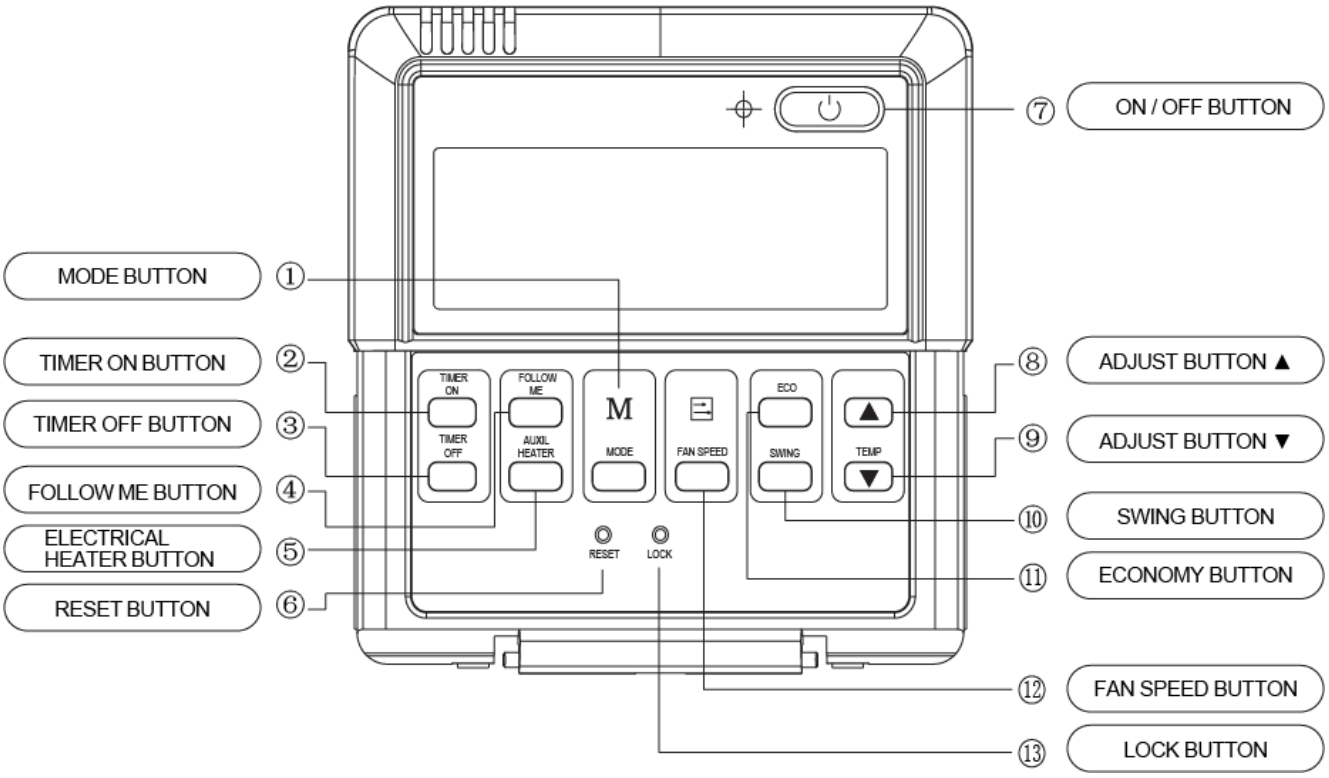

1. Mode button: When press this button, the operation mode change as the following sequence:

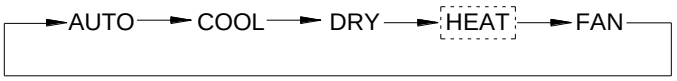

Remark: For the cooling only model, the heating mode is skipped.

2. Timer on button: Press this button, timer on function is active. Then every press, the time increase 0.5h, after 10h, 1h increasement after each press. If cancel this Function, just set it to "0.0"
3. Timer off button: Press this button, timer off function is active. Then every press, the time increase 0.5h, after 10h, 1h increasement after each press. If cancel this function, just set it to "0.0" .
4. Follow me button: When under cool, heat and auto mode, press this button, follow me function is active. Press again, this function is ineffective.
5. Electrical heater button: If press this button in heat mode, electrical heater function become ineffective.
6. Reset button (hidden): Use a 1mm stick to press in the little hole , then the current setting is canceled . The wire controllers enter into original state.
7. ON/OFF button: When in off state, press this button, the indicator is on, the wire controller enter into on state, and send setting information to indoor PCB. When in on state, press this button, the indicator is off, and send instruction. If timer on or timer off has been set, it cancel this setting then send instruction to stop the machine.

8. Adjust button: Set indoor temperature up. If press and hold on, it will increase at 1degree per 0.5 second.
9. Adjust button: Set indoor temperature down. if press and hold on, it will decrease at 1degree per 0.5 Second.
10. Swing button: First press, start swing function; second press, stop swing. (Match to some model with swing function).
11. Economy operation button: press this button, the indoor unit operates in economy mode, press again, exit this mode (it may be ineffective for some models)
12. Fan speed button: press this button consecutively; the fan speed will circle as follow:

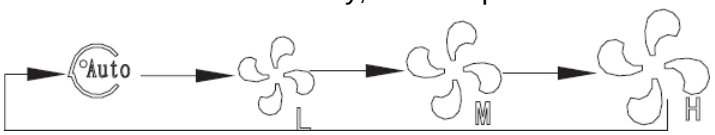

13. Lock button (hidden): When you push the LOCK button, all current settings are locked in and the wire controller does not accept any operation except that of the LOCK button. Use the lock mode when you want to prevent setting from being changed accidentally or play fully. Push the LOCK button again when you want to cancel the LOCK mode.

Name and function of LCD on the wire controller

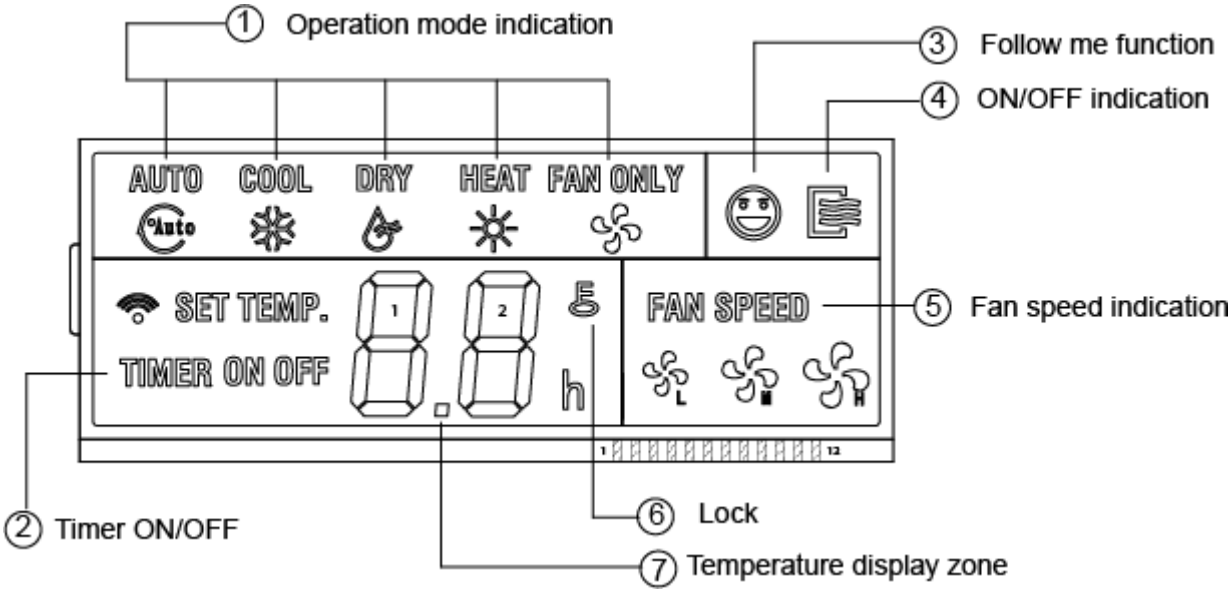

1. Operation mode indication: When press" MODE" button, the following mode can be selected in circle. Auto Cool Dry Heat Fan only Auto.

   Auto→ Cool→ Dry →Heat→ Fan only →Auto
   For cooling only model, heat mode is skipped.
2. Timer: When adjust setting on time or only on time is set, the "ON" is lighted. When adjust setting off time or only off time is set, the" OFF" is lighted. If on and off timer are both set, the "ON" and "OFF" are both lighted.
3. Follow me function: There is a temperature sensor inside the wire controller, after setting temperature, it will compare the two temperatures, and the space of wire controller will be the same as setting temperature. It is available under cooling, heating, auto mode.
4 ON/OFF indication: When it is on, the icon display, otherwise it is extinguished.
5. Fan speed indication: There are four fan modes: low, middle, high, auto. For some models, no middle fan then the middle fan is seen as high speed.
6. Lock: When the "LOCK" button is pressed, the icon appears and other buttons is unable, press again, the icon disappears.
7. Temperature display zone: Generally it displays setting temperature; it can be adjusted by press temperature button▲and▼ .But in fan mode, no display here.

Remark:

The wired controller will reset to factory setting with auto mode, auto fan and 24℃ setting temperature when the air conditioner restarts after power failure.
And this may cause inconsistent displays on the wired controller and on the air conditioner. You need to readjust the running status through the wired controller.

Installation

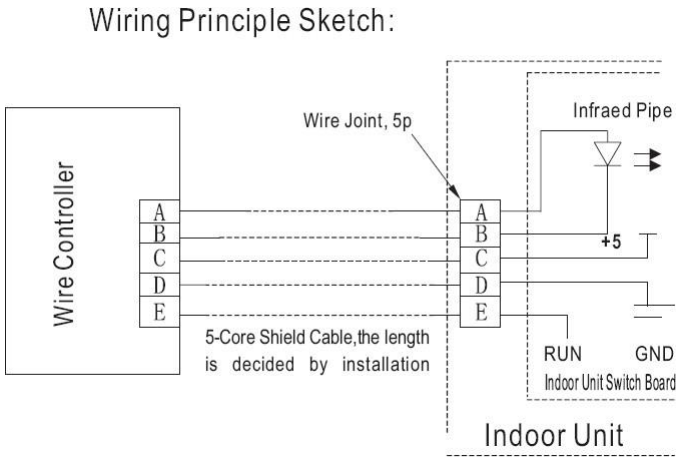

Installation Notice:

When the air conditioner needs the constant frequency wire controller, be sure adding a wire joint with 5 terminal named A, B, C, D, E in indoor unit, and fixing an infrared emitter whose anode and cathode connecting with A and B near the receiver in the indoor unit switch board, then connecting the terminal +5v, GND, Run in the switch board to C,D,E respectively.

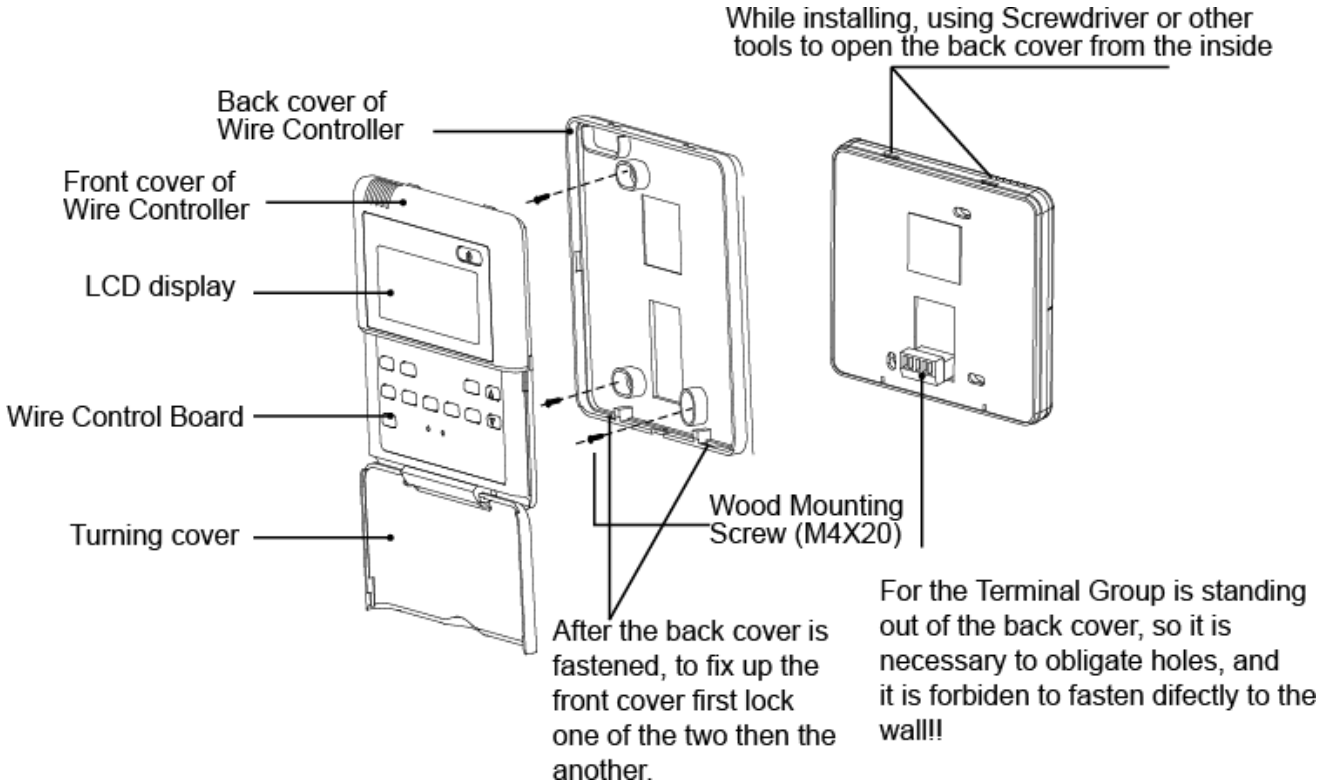

NOTE

- The connecting wire should be a little longer as to take away the switch board easily for maintenance.
- The connecting wire should be a little longer as to take away the controller easily for maintence