GB

TECHNICAL MANUAL



MCP

Multipurpose - total heat recovery reversible heat pumps

7 kW - 41 kW

CE

R407C

TABLE OF CONTENTS

1 The Series 4
2 Constructive features 7
3 Layout of components 8
4 Technical characteristics 18
4.1 Heat pump rated technical data 18
5 Performance 19
5.1 MCP Cooling capacities 19
5.2 MCP Heating capacities 22
5.3 MCP total recovery capacities 25
5.4 Integrated capacities 28
6 Sound level 28
7 Operating limits 28
7.1 Operation of DHW production 29
7.2 Operation in heat pump mode 29
7.3 Operation in chiller mode 30
7.4 Operation in total recovery chiller mode 30
7.5 Heat transfer fluid 30
8 Calculation factors 31
8.1 Change in operating parameters with Δt other than 5°C 31
8.2 Water and glycol mixture 31
9 Pressure drops 31
9.1 Water side pressure drops 31
9.2 Y filter pressure drops 33
10 Available head 34
11 Water circuit 35
11.1 System water content and charging of expansion vessel 35
11.2 Characteristics of the storage reservoir system 36
11.3 Characteristics and selection of the sanitary storage reservoir 37
12 Electrical data and connections 41
13 Overall dimensions 42
14 Installation clearance requirements 46
15 Positioning 47
16.1 Positioning of vibration dampers 47

DECLARATION OF CONFORMITY

Galletti S.p.A., whose head office is located at 12/a Via Romagnoli 12/a Bentivoglio (Bologna) - Italy, hereby declares, under its own responsibility, that the water chillers and heat pumps belonging to the series: (see table below) units intended for applications in civil air conditioning systems, comply with the requirements of Directives: **2006/42/CE, 2004/108/CE, 2006/95/CE, 97/23/CE (PED)**.

These units , working with fluids belonging to group 2, according to Directive **97/23/CE**, are the result of an assembly of components [compressors, brazed plate heat exchangers, liquid receivers, pipes, control and safety valves] which are individually provided, where required, with certification in accordance with current directives: the category to which the machines belong is determined on the basis of an analysis of the components subject to the **PED** and corresponds to the highest category among the components used.

For each series of machines, the conformity of the assembly has been assessed by notified bodies, applying the assessment procedures (forms) pursuant to annex II of the **PED - Directive 97/23/CE**, as shown in the following table:

Bentivoglio, 20/06/2013
Galletti S.p.A.
Luca Galletti

CE

Series	Size	Notified Body	Certificate No.	Conformity assessment procedure	PED Category	Marking
MCC - MCC H	6 - 7 - 9 - 12 - 15	0425	2422/0	D1 module	I	CE
MCC - MCC H	18 - 22 - 25 - 33 - 37	0425		D1 module	II	CE + PED
MCW - MCW / H	5 - 7 - 10 - 12 - 15	0425		D1 module	I	CE
MCW - MCW / H	18 - 20 - 22 - 27 - 31 - 39	0425		D1 module	II	CE + PED
MPE - MPEH MCE - MCEH	4 - 5 - 7 - 8	0425		D1 module	I	CE
MPE - MPEH MCE - MCEH	9 - 10 - 11 - 13 - 15 - 18	0425		D1 module	I	CE
MPE - MPEH MCE - MCEH	19-20-21-23-24-26-27-28-31-32 34-35-39-40	0425		D1 module	II	CE + PED
MPE - MPEH MCE - MCEH	T30 - T34 - T40 - T45	0425		D1 module	II	CE + PED
MPE - MPEH	54 - 66	0425		D1 module	II	CE + PED
MPI	15	0425		D1 module	I	CE
MPI	27	0425		D1 module	II	CE + PED
MPI DC	8 - 10 - 14 - 15 - 18	0425		D1 module	I	CE
MPI DC	23 - 27 - 29	0425		D1 module	II	CE + PED
MFE	5 - 6 - 8 - 12 -13 - 16 - 17 - 20 - 23	0425		D1 module	I	CE
MXE - MXE E	9 - 11 - 14 - 16	0425		D1 module	I	CE
MXE - MXE E	19 - 21	0425		D1 module	II	CE + PED
MCP	7 - 9	0425		D1 module	I	CE
MCP	10-13-15-18-27-32-40-T18-T22-T24-T30	0425		D1 module	II	CE + PED
LCE - LCE H	42 - 52 - 62 - 72 - 82 91/2/4 - 101/2/4 - 121/2/4 141/2/4 - 161/2/4 - 174 - 194 - 214	0425		D1 module	II	CE + PED
LEW	41-42-51-52-61-62-71-72-81-82-91-92-111-112- 131-132-141-142-144-161-162-164-181-182	0425		D1 module	II	CE + PED

All copying, even partial, of this manual is strictly forbidden

UNIT IDENTIFICATION

The unit data are reported on the rating label in this page.

The label shows the following data:

- Series and size of the unit
- Date of manufacture
- Main technical data
- Manufacturer
- The label is applied on the unit, usually on the enclosing panels beside the condenser coil.

IMPORTANT: NEVER REMOVE THE LABEL

- Serial number of the unit
- The serial number permits to identify the technical characteristics and the components installed
- Without this datum it will be impossible to identify the unit correctly

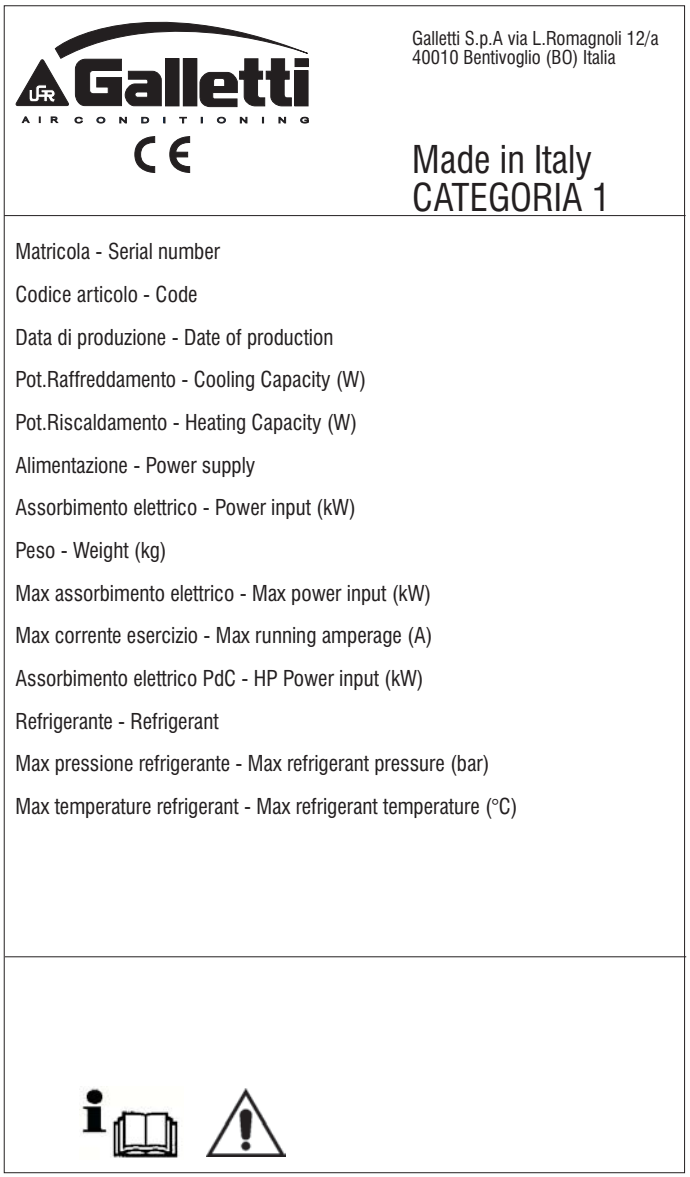

TRANSLATION OF ORIGINAL INSTRUCTIONS

WATER CHILLERS AND HEAT PUMPS ARE IN ACORDARCE WITH THE LAW 97/23/CE (PED) FILLING IN D1 FORM, APPROVED BY THE THIRD NOTIFIED BODY ICIM N°0425.

The technical and dimensional data provided herein may undergo changes in connection with product improvements.

- For any further information, contact the manufacturer: info@galletti.it

All copying, even partial, of this manual is strictly forbidden

1 THE SERIES

The ever increasing need to reduce energy consumption and increase efficiency of production of chilled water for air conditioning and hot water for heating and domestic purposes, combined with the need to make these processes independent of each other and the season of operation is fully achieved with the new series of MCP MULTIPURPOSE units from Galletti. We will use hereafter the term multi-purpose in its "true" meaning: as such making reference to a machine capable of full recovery during the summer period (not a temporary reversal of the cycle, in order to produce domestic hot water, with the consequent inevitable loss of efficiency and comfort). This is therefore a so-called "4-pipe" machine, which must be hydraulically connected to two separate systems: the first is that for heating/cooling the building; the second is that for producing domestic hot water. In general, the multi-purpose nature can characterise both air/water as well as water/water machines, both single-circuit or two circuits, single unit or split version, with an ON/OFF compressor or an inverter.

The MULTIPURPOSE units from the MCP series are designed for outdoor installation, for residential and commercial uses. The range uses a R407C refrigerant that ensures high performance with low energy consumption and consists of 20 different power models, generally from 8 to 40 kW in cooling mode (9-47 kW in heating mode) in nominal conditions (ref. EN14511).

BEYOND CONVENTIONAL WORKING LIMITS

The heat exchangers, with AISI316 and finned block brazed plates have been optimized for the R407C and allow better heat transfer and optimum operation of the unit. Their generous size ensures the production of chilled water even with outside air temperatures close to 50°C and ensure high efficiency for average summer and winter conditions.

EFFICIENCY IN ALL CONDITIONS

The actual thermal load of an air conditioning system is less than 60% of the rated load capacity 90% of the time; the MCP-T version with single-circuit dual compressor answers this demand by offering high efficiency during operation under partial load conditions (ESEER>4) and also guarantees the unit's operation at the worst temperature conditions.

In such conditions the microprocessor controller activates the capacity control mode, doubling the condensing surface available to the single compressor. The axial-type fans with airfoil-shaped blades and 6- and 8-pole motors with electronic speed control (optional) guarantee quiet operation and optimal performance of the unit in all conditions.

ELECTRONIC EXPANSION VALVES

All versions are equipped as standard with electronic expansion valves, to maximize the efficiency at partial loads.

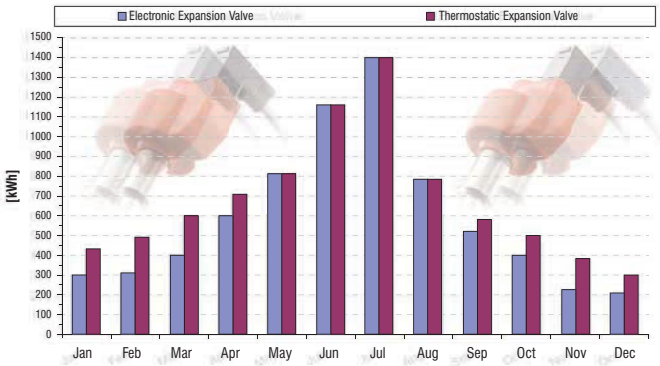

The electronic expansion valve has the ability, if properly configured and managed by the software, to make operation of the refrigeration circuit very effective and reduce the power absorbed by the system.

When there is a sudden change in the thermal load a traditional expansion valve has a transition of 2 to 3 minutes before reaching the equilibrium condition.

Proactive action of an Electronic Expansion Valve

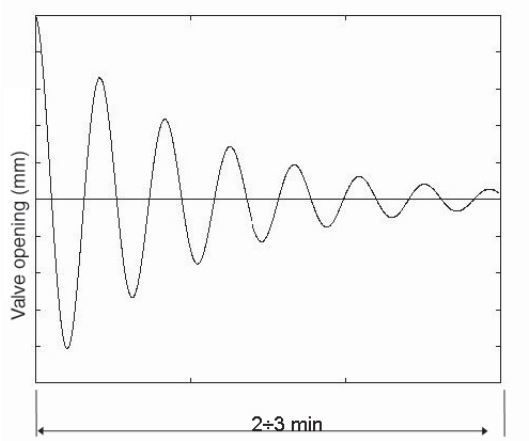

In the event of a request for the switching on or off of a compressor:

- The electronic driver pre-positions the valve in a point very close to the final equilibrium position
- With small adjustments the equilibrium status is rapidly reached.
- The expansion valve becomes an organ which is active and no longer passive, within the system.
- The transition extends over a very short time
- Overall the system is more efficient, with higher EER values and therefore with greater savings.

SELF-ADAPTIVE

The electronic control system allows the setpoint to be adjusted automatically according to the outdoor temperature in order to reduce consumption and broaden the working temperature range.

The unit can also function in systems with a low water content, even without the use of a storage reservoir, thanks to the automatic adjustment which limits the number of compressor starts and thus extends the life of the compressor itself.

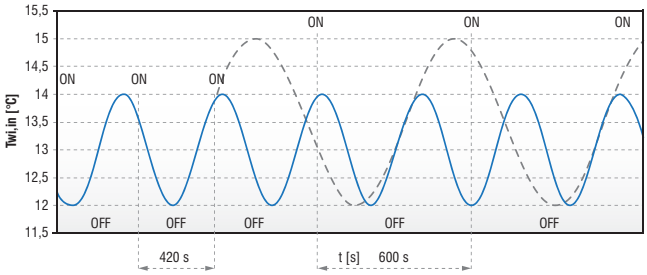

SMART DEFROST SYSTEM

The exclusive defrost system (for series with the MCP unit controller) can correctly identify an impairment of performance in the outdoor exchanger due to the formation of ice and minimise the process time in relation to the normal operation of the unit.

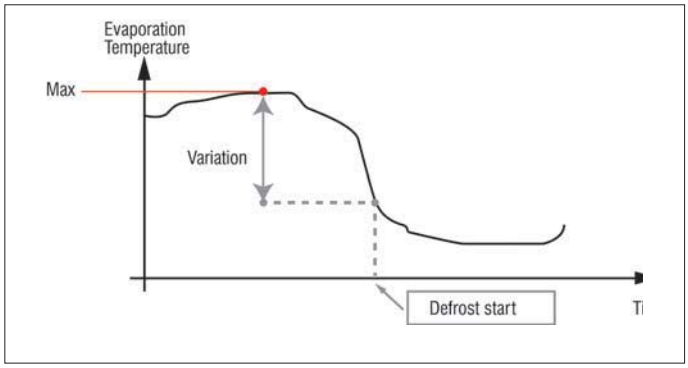

All copying, even partial, of this manual is strictly forbidden

1 THE SERIES

FIELD OF APPLICATION

The multi-purpose units from the **MCP** range are designed for the cooling or heating of water for air conditioning and heating systems and for the production of hot water for domestic use (DHW), for residential or commercial uses. These are "real" multi-purpose units, with 4 water connections, with modes of operation that are listed below:

1. Production of cold water during summer for the air conditioning system (air condensation on the finned block heat exchanger);
2. Production of cold water during summer for the air conditioning system, with TOTAL RECOVERY of condensation heat (for the production of DHW, using a dedicated plate heat exchanger);
3. Production of hot water during winter for the heating system, such as a traditional PdC ("exchanger side" air evaporation and water condensation on dedicated plates, system side);
4. Production of domestic hot water during winter, momentarily interrupting the production of water for heating (DHW. has priority);
5. Production of only DHW (particularly in mild seasons, as well as in summer and winter);

WARNING: when referring to the production of domestic hot water this means the storage of thermal energy in an accumulation of "technical" water; water for domestic use must be heated using a stainless steel coil contained within the accumulation, which prevents the storage of domestic water and the management of an anti legionella cycle is not necessary
(See recommended plumbing diagrams for further details).

WARNING: the **MCP** units are NOT suitable for use as a "rapid" heater

For more information on the construction of a system based on multi-purpose machines from the MCP range, refer to the technical document "guidelines for the construction of multi-purpose systems" (code RG66006968).

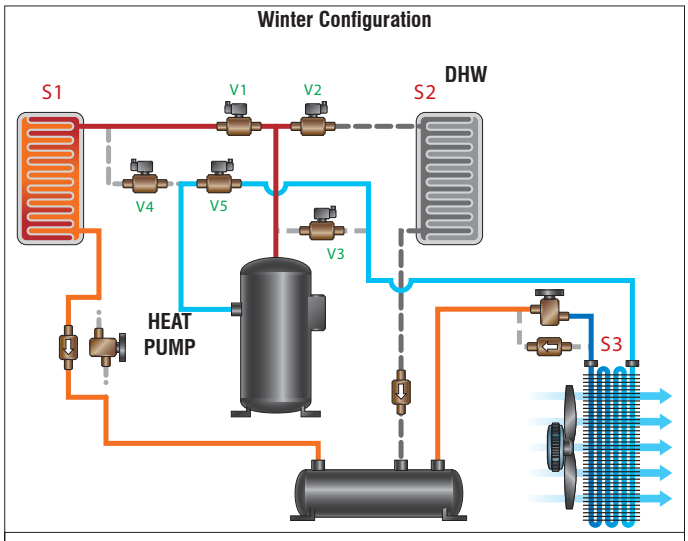

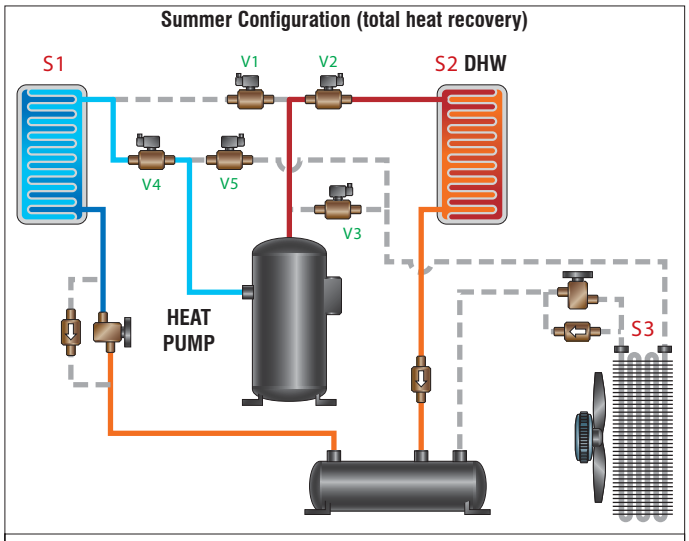

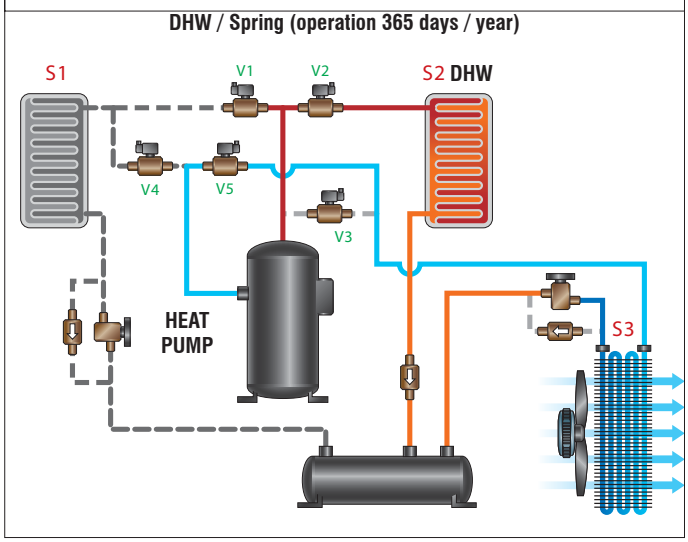

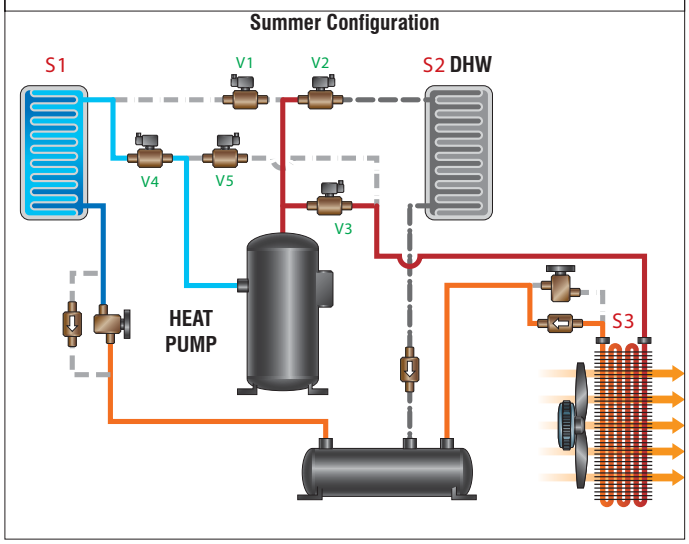

All copying, even partial, of this manual is strictly forbidden

1 THE SERIES

MODELS AND VERSIONS

The MCP series consists of 20 different power models, generally from 8 to 40 kW in cooling mode (9-47 kW in heating mode) in nominal conditions (ref. EN14511).

All models are loaded with R407C refrigerant and equipped with compressors optimized for applications for heat pumps and the production of domestic hot water in all seasons.

N.B. The choice of certain options can prevent the selection of others or create other required fields. Contact Galletti S.p.A. for verification

Complete Unit Code	M	C	P	0	0	7	H	0	A	1	0	0	C	E	0	0	0	0	0	0	0

Version **0**
Single compressor **0**
Tandem **T**

Model (size) **0 7**

Operation **H**
Multipurpose with compressor ON/OFF **H**

Power supply **0**
Standard 400 - 3N - 50 **0**
Special 230 - 3 - 50 **1**
Single phase **M**
400 - 3N - 50 + thermalmagnetic **2**
230 - 3 - 50 + thermalmagnetic **3**
Single phase + thermalmagnetic **4**

(Field 1) Expansion Valve **A**
Electronic valve **A**

(Field 2) Pump and accessories **1**
Not present **0**
1 ON/OFF Pump system side **1**
1 Modulating pump system side **2**
1 EC pump system side **3**
2 Pumps ON/OFF (system+DHW) **4**
2 Modulating pumps (system+DHW) **5**
2 EC pumps (system+DHW) **6**

(Field 3) Intertial buffer tank **0**
Not present **0**
Present system side **S**

(Field 4) Auxiliary contacts **0**
Not present **0**
Compressor status **1**
Capacity control steps enabling **2**
Management of integration of external electric supply **3**
Opt. 1 + Opt. 2 **4**

(Field 5) Fans **C**
Standard with condensing control **C**
BLDC with electronic control **E**

(Field 6) Antifreeze kit **E**
Basic (only plate exchangers) **E**
Supplementary guard for 1 pump **1**
Supplementary guard for 1 pump and tank **2**
Supplementary guard for 2 pumps **3**
Supplementary guard for 2 pumps and tank **4**

(Field 7) Acoustic isolation **0**
Not present **0**
Sound proofing insulation for compressor housing **1**
Compressor headphones **2**
Opt. 1 + Opt. 2 **3**

(Campo 8) Refrigerant circuit accessoires **0**
Not present **0**
Refrigerant gauge **M**

(Field 9) Remote control **0**
Not present **0**
Remote control MYCHILLER basic (excludes opt. 1- 3 field.13) **B**
Remote control MYCHILLER plus (excludes opt. 1-3 field.13) **P**
Advanced remote control pGD1 **C**

(Field 10) Special exchangers **0**
Standard **0**
Copper - copper **R**
Cataphoresis **C**
Anti-corrosion **B**
Hydrophilic **I**

(Field 11) Protection grille **0**
Not present **0**
Present **G**

(Field 12) Compressor options **0**
Not present **0**
Power factor correction capacitors **1**
Soft starter **2**
Power factor correction capacitors + Soft starter **3**

(Field 13) Additional cards **0**
Not present **0**
RS485 (Carel / Modbus) **1**
Clock card **2**
LON card **3**

All copying, even partial, of this manual is strictly forbidden

2 CONSTRUCTIVE FEATURES

Painted galvanised sheet steel structure (RAL9002) for an attractive look and effective resistance to corrosive agents.
Fastening devices are made of non-oxidizable materials, or carbon steel that have undergone surface-passivating treatments.
The compressor compartment is completely sealed and may be accessed on 3 sides thanks to easy-to-remove panels that greatly simplify maintenance and/or inspection. The accessibility to the compressor housing is possible without removing the connections to the hydraulic system.
Sound insulation, available on request, can further reduce the noise emissions of the unit.

CUSTOMISED HYDRAULIC KIT

- High head pump made entirely of stainless steel, already configured for use with mixtures of water and ethylene glycol up to 35% and provided with internal thermal protection.
  It is housed in the compressor compartment and is easy to reach thanks to the removable perimeter panels.
  The units can be equipped with two circulation pumps, a par on the system side and one for the DHW side, both managed by the on-board microprocessor. As an option the unit can be equipped with an inertial water tank, system side, especially useful during the defrost phase especially if the unit is coupled to distribution terminals with low thermal inertia.
- Expansion vessel.
- Safety valve.
- Filling cock (included).
- Automatic vent valve.
- Water differential pressure switch and outlet water temperature probe with anti-freeze thermostat function.
- Mechanical Y filter supplied as a standard feature on all models to protect the evaporator (included).

Electronic pumps are available as an option with a permanent magnet motor to further increase the levels of efficiency and ensure optimum modulation over the entire field of work and accurate control of the flow temperature

COOLING CIRCUIT

- Scroll compressor, optimized for heat pump applications with an R407C refrigerant, inserted in soundproof housing.
- Brazed plate heat exchangers made of stainless steel.
- Finned block condenser with 9.52 mm copper piping and aluminium fins, characterised by ample heat exchange surfaces.
- Dehydrating filter.
- Flow indicator light with humidity indicator.
- Electronic thermostatic valves with advanced drivers and integrated MOP operation.
- Solenoid valves for managing refrigeration cycles in different modes.
- Single-acting valves
- Liquid receiver
- High and low pressure switches.
- Schrader valves for checks and/or maintenance.
- Refrigerant pressure gauges (optional)

FAN DRIVE ASSEMBLY

Electric fan with 6/8-pole external rotor motor directly keyed to the axial fan, with internal thermal protection on the windings, complete with safety grille and dedicated supporting structure.
The fan is housed in a special compartment having a profile designed to optimise ventilation.
The use of finned block heat exchangers with ample surface areas reduces pressure drops on the air side, thus significantly improving the noise levels of the units.
The condensation control system continuously and automatically regulates the fan speed, further limiting the noise emissions of the unit during night time operation and under partial load conditions.
The control under pressure is also active in the DHW production phase, as a control of evaporation in order to ensure optimal operation in all seasons.
EC electronic fans are available as an option with a permanent magnet motor to further increase the levels of efficiency and ensure optimum modulation over the entire field of work.

FINNED BLOCK HEAT EXCHANGER

Made of 9.52 mm diameter copper pipes and aluminium fins, sized to obtain maximum efficiency.
The special engineering of the heat exchangers allows defrost cycles to be carried out at maximum speed in the models with heat pump operation, which brings clear benefits in terms of the integrated efficiency of the whole cycle.

ELECTRONIC MICROPROCESSOR CONTROL



The electronic control enables the complete control of the MCP unit. It can be easily accessed through a polycarbonate flap with IP65 protection rating.
The microprocessor is the heart of the machine and the multi-purpose system. It must manage a machine with 4 connections and then two completely independent hydraulic circuits: on the one hand we have the production of hot/chilled water for the heating/cooling of the environment, on the other hand the production of DHW.
Regardless of the configuration of the machine the controller manages the logic most appropriate for integration with the system (for example, the circulation pumps on the plant side and/or DHW side can be inserted into the machine, or installed outside, but still managed by the control logic through contacts on the electric panel of the unit).
The part connected to the heating system may or may not have an internal and/or external inertial water storage tank while there will always be a tank for storing the energy necessary for the production of DHW. For the management of the priorities in DHW production, the machine is equipped with a temperature sensor to be inserted into a trap in the storage tank. This sensor will activate the DHW storage side pump and the same DHW production whenever the tank temperature drops below a set threshold. Alternatively the temperature sensor, the clean contact coming from an external thermostat (connected to the terminal of the electric panel) can be used.
The self-adaptive logic in theory enables the unit to operate even in systems where the water content is low, hence avoiding the use of an inertial water storage reservoir. Particular attention, in this case, should be given to evaluating the system side of the water temperatures during the defrost phases.
By reading the outdoor air temperature, it can automatically change the setpoint to adapt it to the outdoor load conditions or keep the unit running even in the harshest winter conditions.
The controller is configured with different serial cards, and allows immediate connection to the supervision networks.

Main functions:

- Control of the water temperature entering the heat exchanger, system side.
- Control of the water temperature entering the heat exchanger, DHW side
- DHW production management as a priority.
- Management of the activation of the DHW side pump (only if necessary, based on the storage temperature)
- Management of the defrosting function
- Control of fan speed
- Complete alarm management.
- Dynamic control of the setpoint according to the outdoor air temperature
- Can be connected to an RS485 serial line for supervisory / teleassistance operation;
- Option of connecting an external terminal that duplicates the control functions.

Control of the machine devices:

- Compressor
- Fans
- Solenoid valves on the refrigerant circuit
- Water circulation pump/s
- Antifreeze heating elements
- Alarm signalling relay

ELECTRIC PANEL

The electric panel is constructed and wired in accordance with EEC Directive 73/23, Directive 89/336 on electromagnetic compatibility and related standards. Made of steel sheet, it is also protected by the enclosing panels of the machine.

All copying, even partial, of this manual is strictly forbidden

2 CONSTRUCTIVE FEATURES

OPTIONS
- Magnetothermic switches
- Hydraulic options (1 or 2 pumps, on-off or modulating with phase-cut, or EC pumps)
- System side storage reservoir integrated into the unit.
- DC Brushless Fans
- Antifreeze heating elements on the water circuit
- Low noise execution (soundproofing of the CP housing and/or CP headphones)
- Refrigerant pressure gauges
- Remote controls with microprocessor
- Special exchangers (hydrophilic treatment, copper-copper, cataphoresis, anti-corrosion)
- Exchanger protection grilles
- Condensers for power factor correction
- Soft starter
- RS485 serial cards, Clock, LON

ACCESSORIES AVAILABLE
Base vibration dampers

3 LAYOUT OF COMPONENTS

MCP 07 ÷ 15

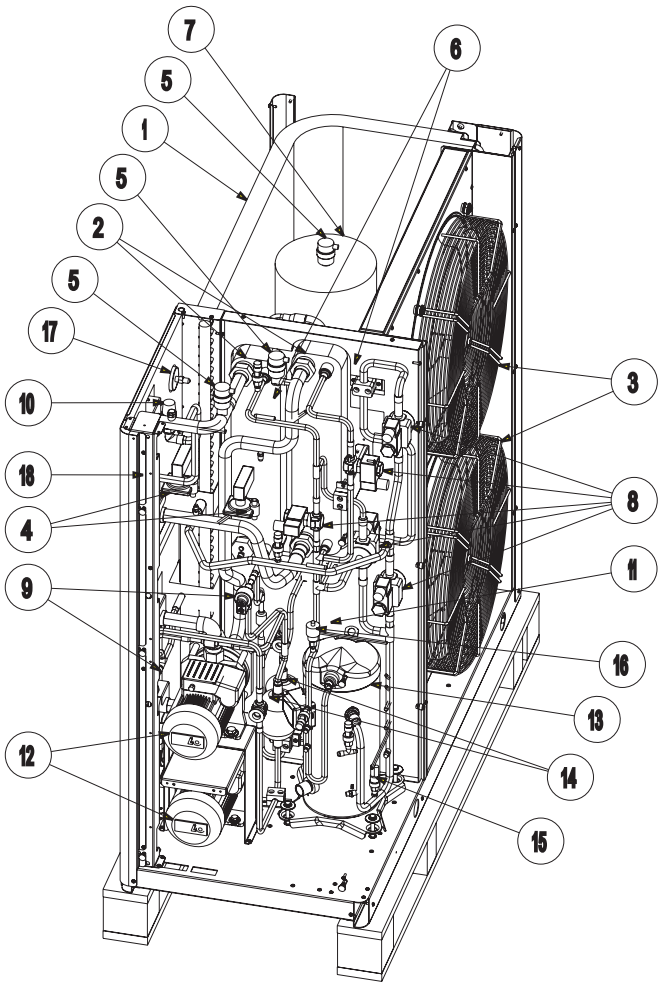

LEGEND	Description	LEGEND	Description
1	R407C-air exchanger	10	Water safety valve
2	R407C-water exchanger	11	Liquid receiver (fan compartment)
3	Fan	12	Circulation pump
4	Water differential pressure switch	13	Compressor
5	Automatic air vent valve	14	Refrigerant filter
6	Expansion vessel (fan compartment)	15	Low pressure switch
7	Storage tank	16	High pressure switch
8	Refrigerant solenoid valve	17	Water pressure gauge
9	Electronic thermostatic valve	18	Water filling point

All copying, even partial, of this manual is strictly forbidden

3 LAYOUT OF COMPONENTS

MCP 18 ÷ 27

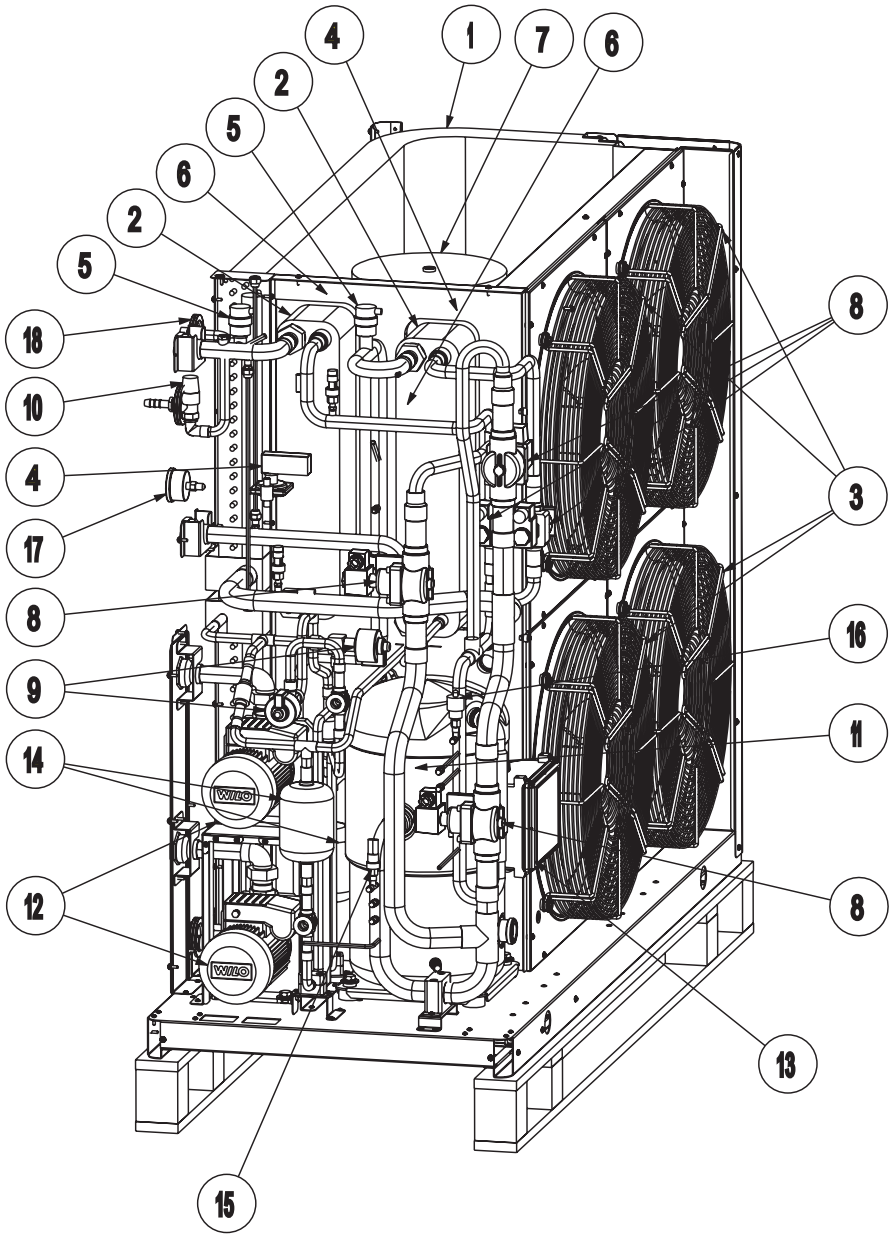

LEGEND	Description
1	R407C-air exchanger
2	R407C-water exchanger
3	Fan
4	Water differential pressure switch (No.1 fan compartment)
5	Automatic air vent valve
6	Expansion vessel (fan compartment)
7	Storage tank
8	Refrigerant solenoid valve
9	Electronic thermostatic valve

LEGEND	Description
10	Water safety valve
11	Liquid receiver (fan compartment)
12	Circulation pump
13	Compressor
14	Refrigerant filter
15	Low pressure switch
16	High pressure switch
17	Water pressure gauge
18	Water filling point

All copying, even partial, of this manual is strictly forbidden

3 LAYOUT OF COMPONENTS

MCP 18 ÷ 24T

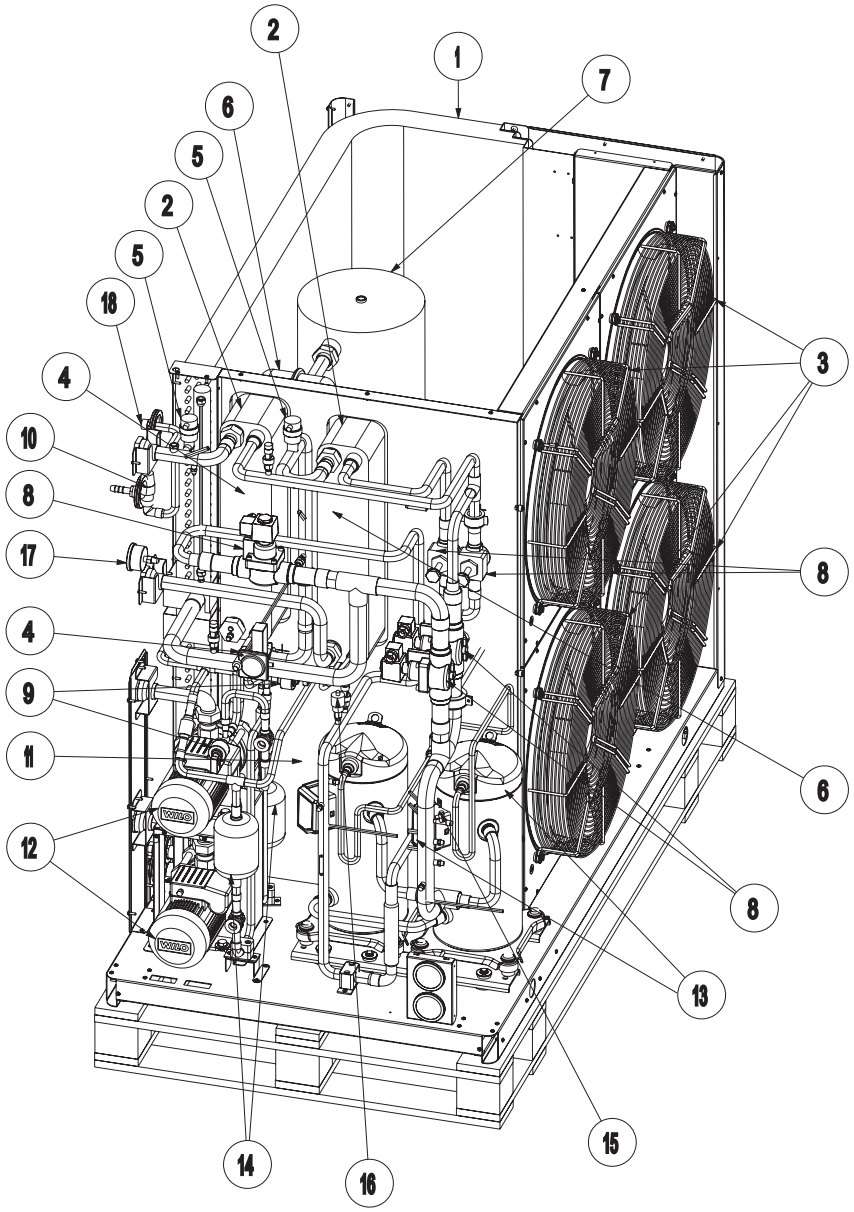

LEGEND	Description
1	R407C-air exchanger
2	R407C-water exchanger
3	Fan
4	Water differential pressure switch (No.1 fan compartment)
5	Automatic air vent valve
6	Expansion vessel (fan compartment)
7	Storage tank
8	Refrigerant solenoid valve
9	Electronic thermostatic valve

LEGEND	Description
10	Water safety valve
11	Liquid receiver (fan compartment)
12	Circulation pump
13	Compressor
14	Refrigerant filter
15	Low pressure switch
16	High pressure switch
17	Water pressure gauge
18	Water filling point

All copying, even partial, of this manual is strictly forbidden

3 LAYOUT OF COMPONENTS

MCP 32 ÷ 40

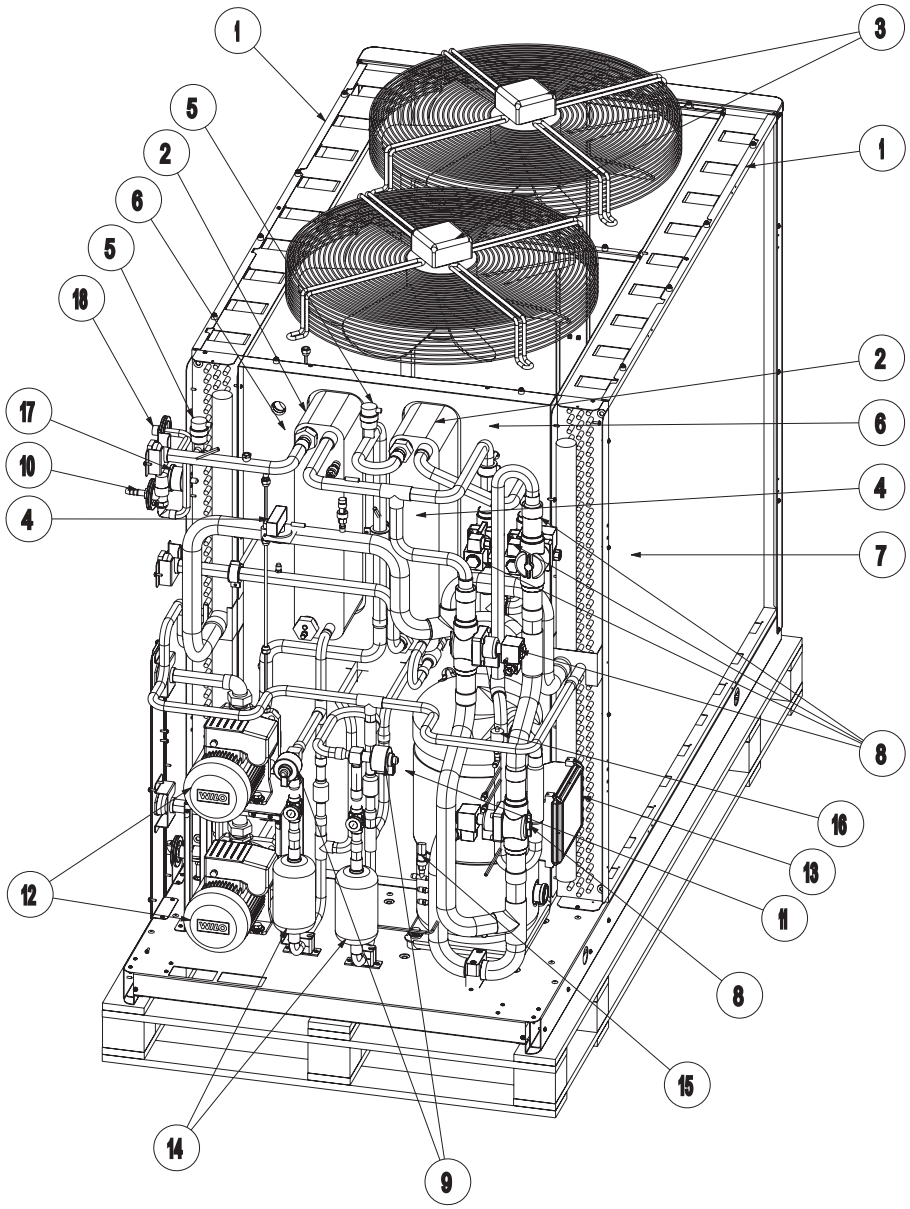

LEGEND	Description
1	R407C-air exchanger
2	R407C-water exchanger
3	Fan
4	Water differential pressure switch (No.1 fan compartment)
5	Automatic air vent valve
6	Expansion vessel (fan compartment)
7	Storage tank (fan compartment)
8	Refrigerant solenoid valve
9	Electronic thermostatic valve

LEGEND	Description
10	Water safety valve
11	Liquid receiver (fan compartment)
12	Circulation pump
13	Compressor
14	Refrigerant filter
15	Low pressure switch
16	High pressure switch
17	Water pressure gauge
18	Water filling point

All copying, even partial, of this manual is strictly forbidden

3 LAYOUT OF COMPONENTS

MCP 30T

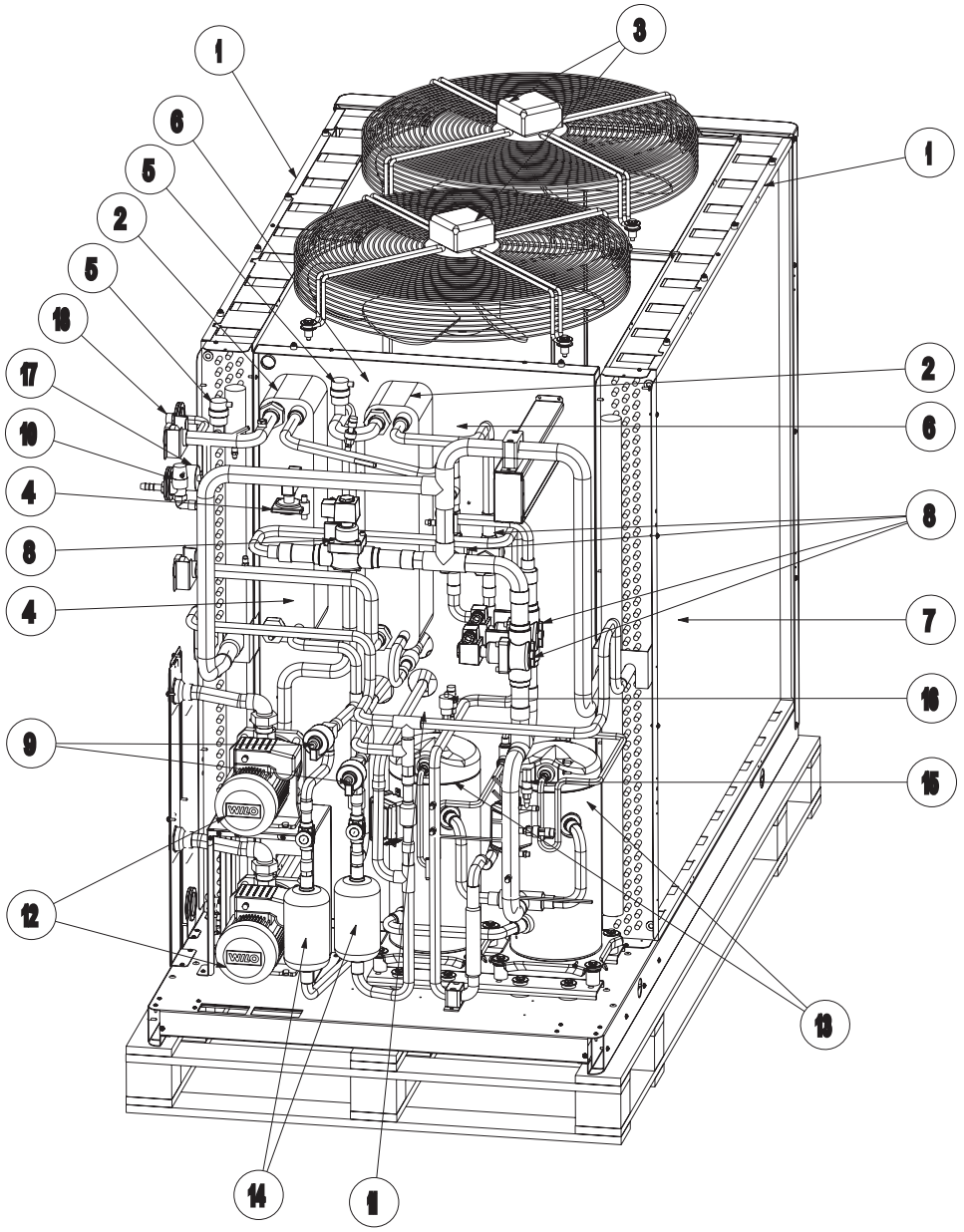

LEGEND	Description
1	R407C-air exchanger
2	R407C-water exchanger
3	Fan
4	Water differential pressure switch (No.1 fan compartment)
5	Automatic air vent valve
6	Expansion vessel (fan compartment)
7	Storage tank (fan compartment)
8	Refrigerant solenoid valve
9	Electronic thermostatic valve

LEGEND	Description
10	Water safety valve
11	Liquid receiver (fan compartment)
12	Circulation pump
13	Compressor
14	Refrigerant filter
15	Low pressure switch
16	High pressure switch
17	Water pressure gauge
18	Water filling point

All copying, even partial, of this manual is strictly forbidden

3 LAYOUT OF COMPONENTS

MCP 07 ÷ 15 EC

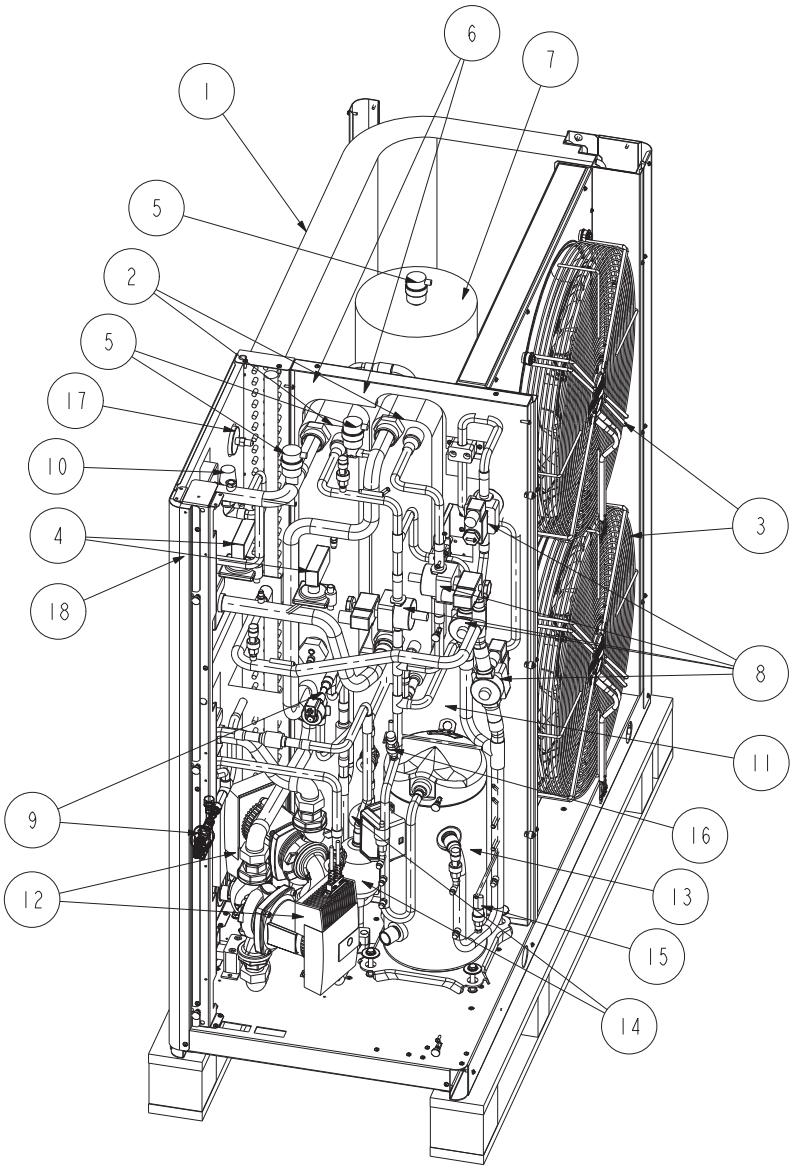

LEGEND	Description
1	R407C-air exchanger
2	R407C-water exchanger
3	Fan
4	Water differential pressure switch
5	Automatic air vent valve
6	Expansion vessel (fan compartment)
7	Storage tank
8	Refrigerant solenoid valve
9	Electronic thermostatic valve

LEGEND	Description
10	Water safety valve
11	Liquid receiver (fan compartment)
12	Circulation pump
13	Compressor
14	Refrigerant filter
15	Low pressure switch
16	High pressure switch
17	Water pressure gauge
18	Water filling point

All copying, even partial, of this manual is strictly forbidden

3 LAYOUT OF COMPONENTS

MCP 18 ÷ 27 EC

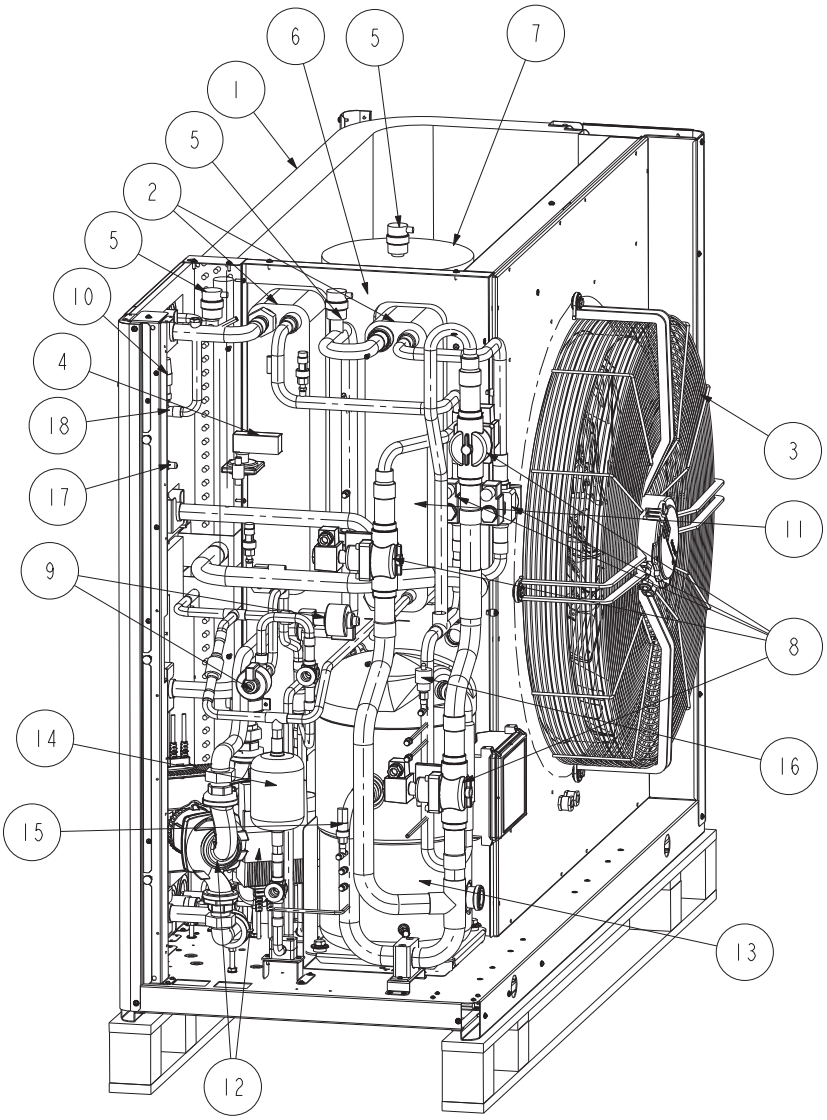

LEGEND	Description
1	R407C-air exchanger
2	R407C-water exchanger
3	Fan
4	Water differential pressure switch (No.1 fan compartment)
5	Automatic air vent valve
6	Expansion vessel (fan compartment)
7	Storage tank
8	Refrigerant solenoid valve
9	Electronic thermostatic valve

LEGEND	Description
10	Water safety valve
11	Liquid receiver (fan compartment)
12	Circulation pump
13	Compressor
14	Refrigerant filter
15	Low pressure switch
16	High pressure switch
17	Water pressure gauge
18	Water filling point

All copying, even partial, of this manual is strictly forbidden

3 LAYOUT OF COMPONENTS

MCP 18 ÷ 24T EC

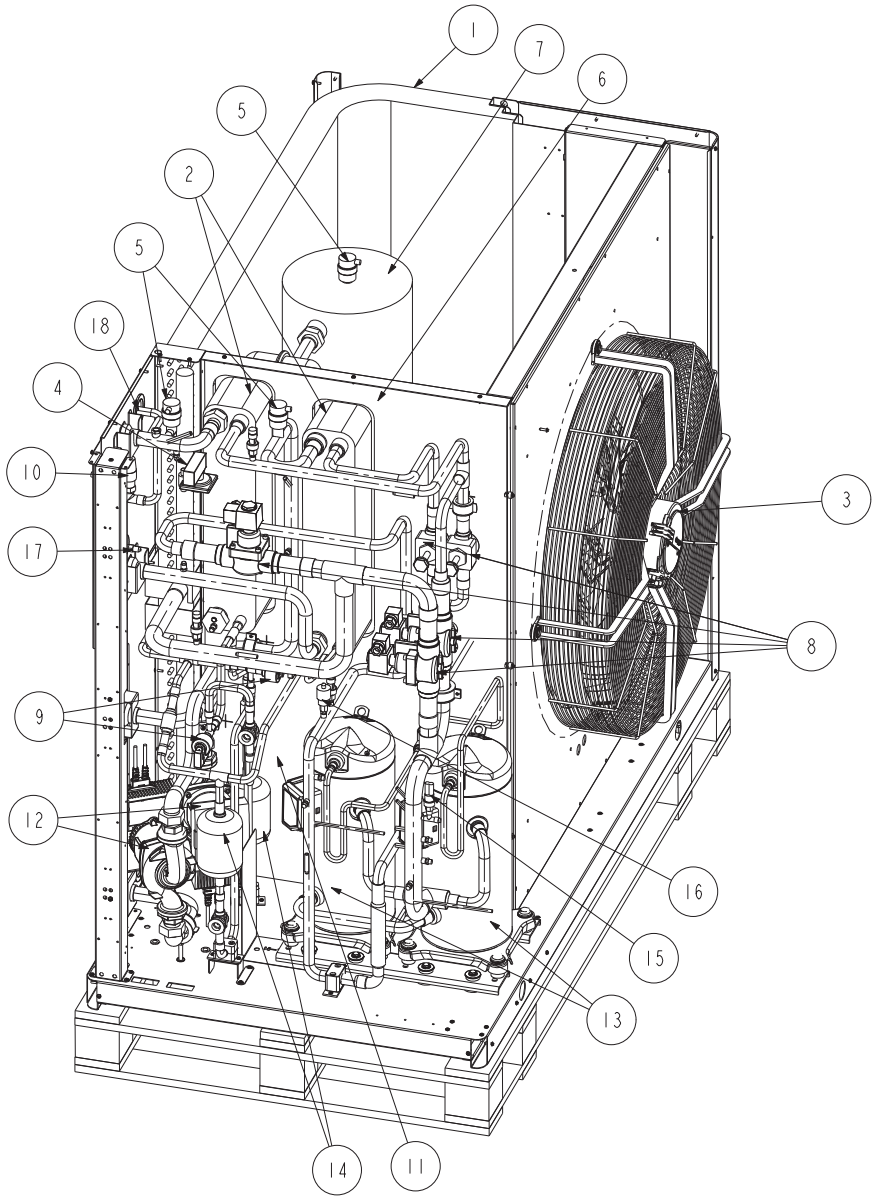

LEGEND	Description
1	R407C-air exchanger
2	R407C-water exchanger
3	Fan
4	Water differential pressure switch (No.1 fan compartment)
5	Automatic air vent valve
6	Expansion vessel (fan compartment)
7	Storage tank
8	Refrigerant solenoid valve
9	Electronic thermostatic valve

LEGEND	Description
10	Water safety valve
11	Liquid receiver (fan compartment)
12	Circulation pump
13	Compressor
14	Refrigerant filter
15	Low pressure switch
16	High pressure switch
17	Water pressure gauge
18	Water filling point

All copying, even partial, of this manual is strictly forbidden

3 LAYOUT OF COMPONENTS

MCP 32 ÷ 40 EC

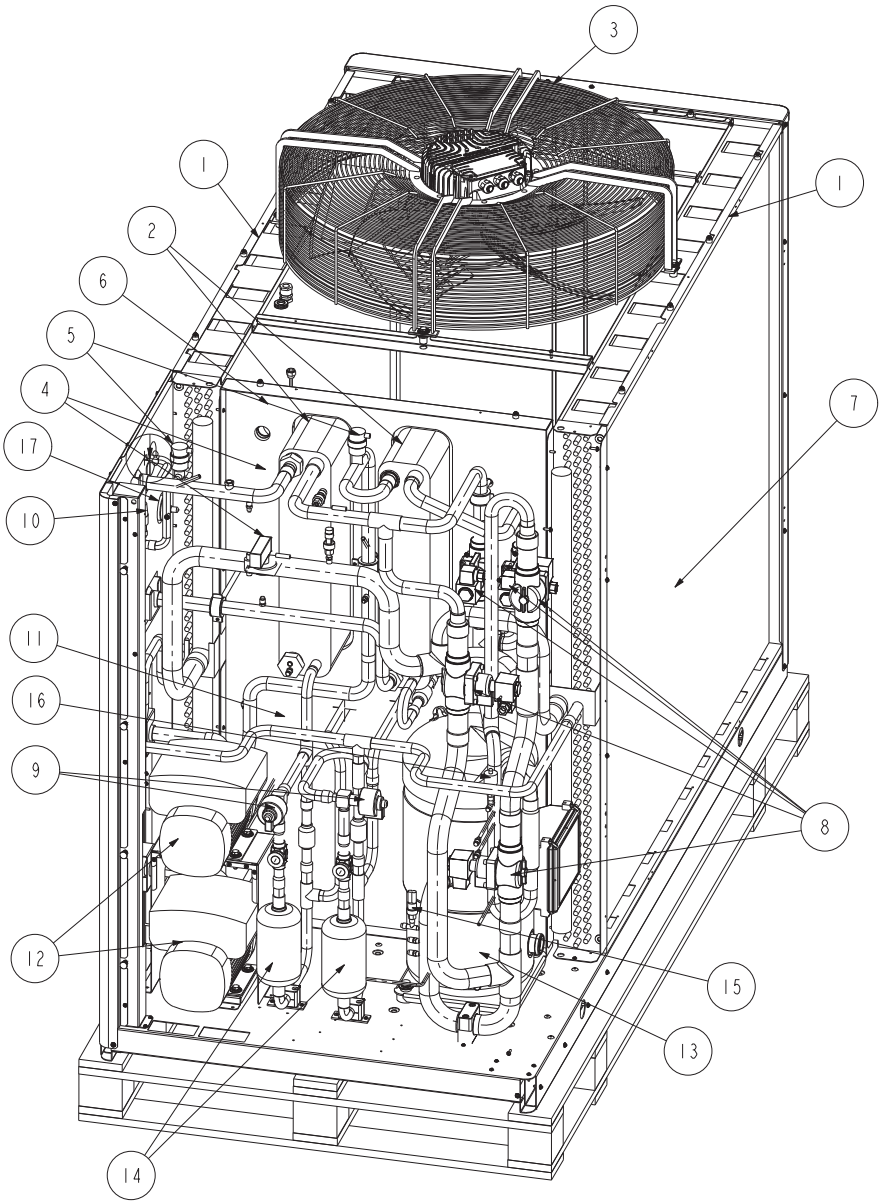

LEGEND	Description
1	R407C-air exchanger
2	R407C-water exchanger
3	Fan
4	Water differential pressure switch (No.1 fan compartment)
5	Automatic air vent valve
6	Expansion vessel (fan compartment)
7	Storage tank (fan compartment)
8	Refrigerant solenoid valve
9	Electronic thermostatic valve

LEGEND	Description
10	Water safety valve
11	Liquid receiver (fan compartment)
12	Circulation pump
13	Compressor
14	Refrigerant filter
15	Low pressure switch
16	High pressure switch
17	Water pressure gauge
18	Water filling point

All copying, even partial, of this manual is strictly forbidden

3 LAYOUT OF COMPONENTS

MCP 30T EC

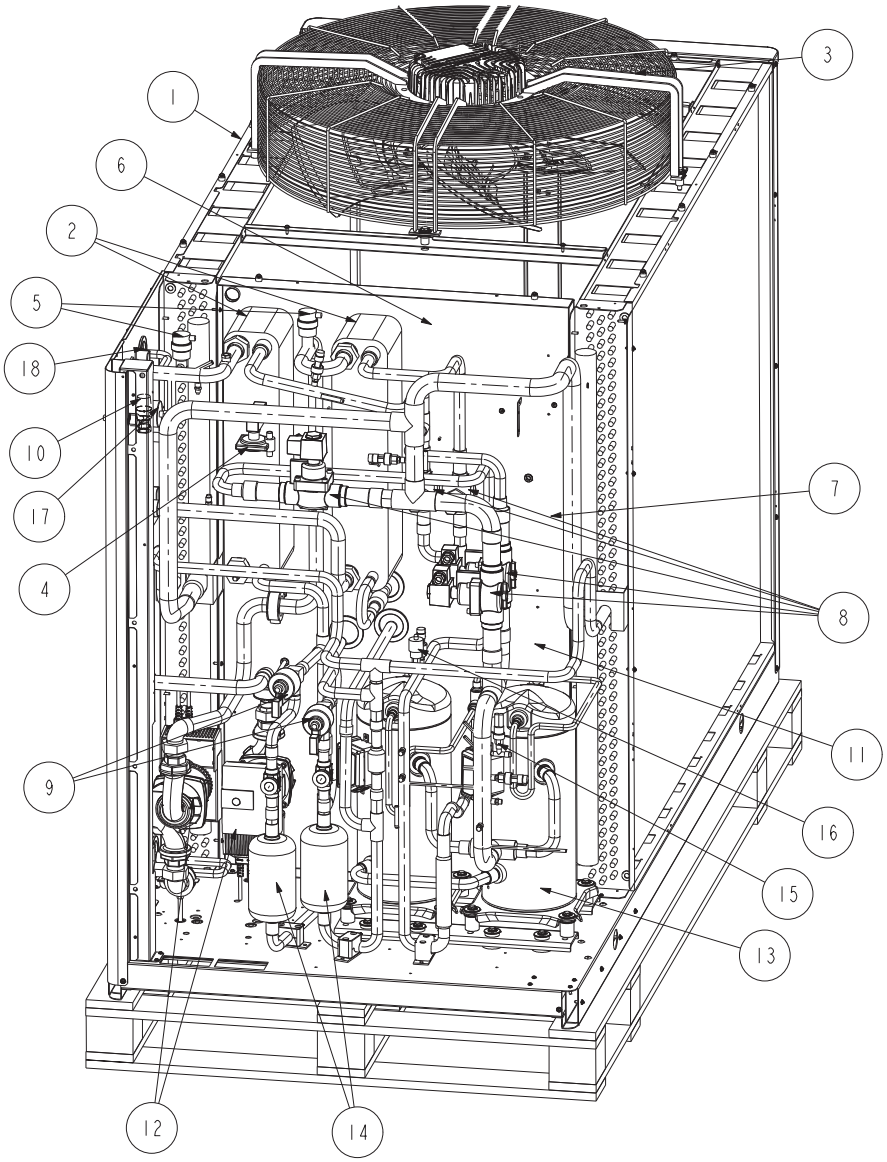

LEGEND	Description
1	R407C-air exchanger
2	R407C-water exchanger
3	Fan
4	Water differential pressure switch (No.1 fan compartment)
5	Automatic air vent valve
6	Expansion vessel (fan compartment)
7	Storage tank (fan compartment)
8	Refrigerant solenoid valve
9	Electronic thermostatic valve

LEGEND	Description
10	Water safety valve
11	Liquid receiver (fan compartment)
12	Circulation pump
13	Compressor
14	Refrigerant filter
15	Low pressure switch
16	High pressure switch
17	Water pressure gauge
18	Water filling point

All copying, even partial, of this manual is strictly forbidden

4 CONSTRUCTIVE FEATURES

4.1 HEAT PUMPS RATED TECHNICAL DATA

MCP		007M	007	009M	009	010M	010	013M	013	015	018
Power supply	V-ph-Hz	230-1-50	400-3N-50	230-1-50	400-3N-50	230-1-50	400-3N-50	230-1-50	400-3N-50	400-3N-50	400-3N-50
Cooling mode											
Cooling capacity [1]	kW	7,60	7,60	9,60	9,70	11,10	11,30	13,40	13,60	15,80	19,60
Power input 1	kW	2,70	2,60	3,35	3,25	3,87	3,77	4,72	4,62	5,55	7,32
EER		3,01	3,14	3,04	3,17	3,04	3,18	3,03	3,15	3,02	2,83
Cooling mode +ACS											
Cooling capacity [1]	kW	7,20	7,30	9,00	9,10	10,60	10,80	12,80	13,00	15,40	18,40
Power input [1]	kW	2,66	2,66	3,38	3,28	3,90	3,80	4,85	4,65	5,48	7,28
Heating capacity DHW	kW	9,48	9,58	11,95	11,95	14,02	14,13	16,98	16,99	20,15	24,77
Total COP		6,18	6,26	6,14	6,35	6,27	6,51	6,07	6,37	6,41	5,88
Heating mode (system / DHW)											
Heating capacity [2]	kW	8,9	8,8	11,1	11,2	12,6	12,7	15,6	15,7	18,1	23,3
Power input [2]	kW	2,90	2,80	3,75	3,55	4,17	4,07	5,12	5,02	5,75	7,72
COP		3,13	3,20	3,02	3,19	3,07	3,18	3,10	3,18	3,19	3,06
Water flow - chiller mode	l/h	1.307	1.307	1.651	1.668	1.909	1.944	2.305	2.339	2.718	3.371
Water flow - pdc mode	l/h	1.527	1.510	1.916	1.918	2.171	2.189	2.680	2.698	3.105	4.002
DHW water flow	l/h	1.631	1.648	2.055	2.055	2.411	2.430	2.921	2.922	3.466	4.260
Pump head, system side (chiller)	kPa	142	142	125	124	121	119	142	140	128	129
Pump head, DHW side	kPa	123	122	98	98	88	86	109	108	79	94
No. of scroll compressors / circuits		1/1	1/1	1/1	1/1	1/1	1/1	1/1	1/1	1/1	1/1
Diameter of water connections	inches	1" 1/4	1" 1/4	1" 1/4	1" 1/4	1" 1/4	1" 1/4	1" 1/4	1" 1/4	1" 1/4	1" 1/4
Buffer tank	dm^3	30	30	30	30	30	30	30	30	30	50
Height	mm	1224	1224	1224	1224	1224	1224	1224	1224	1224	1273
Length	mm	1324	1324	1324	1324	1324	1324	1324	1324	1324	1665
Depth	mm	560	560	560	560	560	560	560	560	560	655
Sound power level	dB(A)	72	72	75	75	75	75	75	75	75	78
Ref. R407C	(kg)	6,3	6,3	6,3	6,3	6,5	6,5	7,4	7,4	8,3	10,8
Transport weight *	(kg)	228	228	265	265	256	256	265	265	270	393
Operating weight *	(kg)	245	245	282	282	272	272	282	282	287	426,5
MCP		**027**	**032**	**040**	**T18M**	**T18**	**T22M**	**T22**	**T24M**	**T24**	**T30**
Power supply	V-ph-Hz	400-3N-50	400-3N-50	400-3N-50	230-1-50	400-3N-50	230-1-50	400-3N-50	230-1-50	400-3N-50	400-3N-50
Cooling mode											
Cooling capacity [1]	kW	27,4	34,4	40,4	18,6	18,8	21,4	21,6	26,0	26,4	32,4
Power input 1	kW	10,00	11,92	14,74	6,72	6,52	7,75	7,55	9,79	9,29	10,73
EER		2,89	3,09	2,91	2,94	3,07	2,93	3,04	2,81	3,01	3,18
Cooling mode +ACS											
Cooling capacity [1]	kW	27,10	32,90	39,40	17,40	17,60	20,20	20,60	25,40	25,80	30,80
Power input [1]	kW	9,66	11,98	14,60	6,98	6,78	8,01	7,61	9,45	9,25	10,89
Heating capacity DHW	kW	35,65	43,45	52,42	23,48	23,49	27,23	27,25	33,76	33,97	40,49
Total COP		6,48	6,40	6,33	5,81	6,01	5,89	6,25	6,26	6,45	6,54
Heating mode (system / DHW)											
Heating capacity [2]	kW	31,4	40,0	47,4	22,3	22,1	25,0	25,2	30,2	30,4	37,5
Power input [2]	kW	9,90	12,52	15,04	7,52	7,32	8,55	8,35	9,99	9,79	11,53
COP		3,22	3,25	3,20	3,01	3,07	2,97	3,07	3,07	3,15	3,29
Water flow - chiller mode	l/h	4.713	5.917	6.949	3.199	3.234	3.681	3.715	4.472	4.541	5.573
Water flow - pdc mode	l/h	5.395	6.871	8.157	3.832	3.799	4.305	4.341	5.188	5.224	6.448
DHW water flow	l/h	6.132	7.473	9.015	4.039	4.040	4.684	4.687	5.807	5.843	6.964
Pump head, system side (chiller)	kPa	119	144	131	136	135	133	132	127	125	106
Pump head, DHW side	kPa	72	115	89	105	105	99	99	85	84	60
No. of scroll compressors / circuits		1/1	1/1	1/1	2/1	2/1	2/1	2/1	2/1	2/1	2/1
Diameter of water connections	inches	1" 1/4	1" 1/4	1" 1/4	1" 1/4	1" 1/4	1" 1/4	1" 1/4	1" 1/4	1" 1/4	1" 1/4
Buffer tank	dm^3	50	125	125	50	50	50	50	50	50	125
Height	mm	1273	1489	1489	1273	1273	1273	1273	1273	1273	1489
Length	mm	1665	2065	2065	1665	1665	1665	1665	1665	1665	2065
Depth	mm	655	951	951	863	863	863	863	863	863	951
Sound power level	dB(A)	78	78	78	78	78	78	78	78	78	78
Ref. R407C	(kg)	11,5	16,0	18,0	11,5	11,5	11,5	11,5	11,5	11,5	14,0
Transport weight *	(kg)	398	525	528	395	395	388,5	388,5	394	394	525
Operating weight *	(kg)	434,7	632	635	428	428	415	415	420	420	632

*** Weights referred to version including pump and buffer tank**

1 Water temperature 12°C - 7°C, ambient air temperature 35°C

2 Water temperature 40°C - 45°C, dry bulb external air temperature 7°C, wet bulb external air temperature 6°C

Performance measured in accordance with EN 14511

All copying, even partial, of this manual is strictly forbidden

5 PERFORMANCE

5.1 MCP COOLING CAPACITIES

Tbs_1	Air inlet temperature (dry bulb)
Tw in/out	Water inlet/outlet temperature
PF	Cooling capacity
PA	Total power input including pump

	Tbs_1		20		25		30		35		40		45	
	Tw in	Tw out	PF	PA	PF	PA	PF	PA	PF	PA	PF	PA	PF	PA
	[°C]	[°C]	kW	kW	kW	kW	kW	kW	kW	kW	kW	kW	kW	kW
MCP 007M	10	5	8,51	2,14	8,04	2,29	7,57	2,45	7,09	2,64	6,61	2,85	6,13	3,09
	11	6	8,81	2,17	8,32	2,31	7,83	2,48	7,34	2,67	6,84	2,88	6,34	3,12
	12	7	9,11	2,19	8,61	2,33	8,11	2,50	7,60	2,70	7,08	2,91	6,56	3,16
	13	8	9,43	2,22	8,91	2,36	8,39	2,53	7,86	2,72	7,33	2,95	6,79	3,19
	14	9	9,75	2,24	9,21	2,38	8,67	2,56	8,13	2,75	7,58	2,98	7,02	3,23
	15	10	10,08	2,26	9,52	2,41	8,96	2,58	8,40	2,78	7,83	3,01	7,26	3,27
	16	11	10,41	2,29	9,84	2,44	9,26	2,61	8,68	2,82	8,09	3,05	7,50	3,31
	23	18	11,35	2,36	10,73	2,51	10,10	2,70	9,46	2,91	8,82	3,15	8,16	3,41
MCP 007	10	5	8,49	2,07	8,02	2,20	7,55	2,36	7,09	2,54	6,63	2,75	6,17	2,97
	11	6	8,79	2,09	8,31	2,23	7,82	2,39	7,34	2,57	6,86	2,77	6,39	3,01
	12	7	9,11	2,11	8,60	2,25	8,10	2,41	7,60	2,59	7,10	2,80	6,61	3,04
	13	8	9,43	2,14	8,90	2,27	8,38	2,44	7,86	2,62	7,35	2,84	6,83	3,07
	14	9	9,75	2,16	9,21	2,30	8,67	2,46	8,13	2,65	7,60	2,87	7,06	3,11
	15	10	10,09	2,18	9,52	2,32	8,96	2,49	8,41	2,68	7,85	2,90	7,29	3,14
	16	11	10,43	2,21	9,85	2,35	9,27	2,52	8,69	2,71	8,10	2,93	7,52	3,18
	23	18	11,38	2,27	10,75	2,42	10,11	2,60	9,46	2,80	8,81	3,03	8,15	3,28
MCP 009M	10	5	10,60	2,66	10,07	2,83	9,53	3,04	8,95	3,29	8,34	3,57	7,71	3,88
	11	6	10,98	2,69	10,44	2,86	9,87	3,07	9,27	3,32	8,64	3,60	7,98	3,92
	12	7	11,38	2,71	10,82	2,89	10,23	3,10	9,60	3,35	8,94	3,64	8,26	3,96
	13	8	11,78	2,74	11,20	2,92	10,59	3,13	9,94	3,38	9,26	3,68	8,54	4,01
	14	9	12,20	2,77	11,60	2,95	10,96	3,16	10,28	3,42	9,57	3,72	8,83	4,06
	15	10	12,62	2,80	12,00	2,98	11,33	3,20	10,63	3,46	9,90	3,76	9,12	4,11
	16	11	13,05	2,83	12,41	3,01	11,72	3,23	10,99	3,50	10,23	3,81	9,42	4,16
	23	18	14,35	2,92	13,64	3,11	12,88	3,34	12,07	3,62	11,22	3,95	10,32	4,33
MCP 009	10	5	10,74	2,53	10,20	2,72	9,64	2,94	9,05	3,18	8,45	3,45	7,82	3,75
	11	6	11,12	2,56	10,56	2,75	9,98	2,97	9,37	3,21	8,75	3,49	8,09	3,80
	12	7	11,51	2,59	10,93	2,78	10,33	3,00	9,70	3,25	9,05	3,53	8,38	3,84
	13	8	11,90	2,62	11,30	2,81	10,68	3,03	10,03	3,29	9,36	3,57	8,67	3,89
	14	9	12,30	2,65	11,69	2,84	11,04	3,07	10,37	3,33	9,68	3,62	8,96	3,94
	15	10	12,71	2,68	12,08	2,88	11,41	3,10	10,72	3,37	10,00	3,66	9,26	3,99
	16	11	13,13	2,71	12,47	2,91	11,79	3,14	11,07	3,41	10,33	3,71	9,56	4,04
	23	18	14,43	2,82	13,71	3,03	12,95	3,27	12,16	3,55	11,34	3,87	10,49	4,23
MCP 010M	10	5	12,43	2,96	11,78	3,20	11,09	3,48	10,38	3,79	9,64	4,14	8,87	4,52
	11	6	12,86	2,99	12,18	3,23	11,48	3,51	10,74	3,83	9,97	4,18	9,16	4,58
	12	7	13,30	3,02	12,60	3,27	11,87	3,55	11,10	3,87	10,30	4,23	9,47	4,63
	13	8	13,74	3,05	13,02	3,30	12,26	3,59	11,47	3,91	10,64	4,28	9,77	4,69
	14	9	14,20	3,08	13,45	3,33	12,67	3,62	11,85	3,96	10,99	4,33	10,09	4,75
	15	10	14,66	3,11	13,89	3,37	13,08	3,66	12,23	4,00	11,34	4,38	10,40	4,81
	16	11	15,13	3,14	14,34	3,40	13,50	3,70	12,62	4,05	11,70	4,44	10,73	4,87
	23	18	16,29	3,22	15,44	3,49	14,54	3,81	13,59	4,17	12,58	4,58	11,52	5,03
MCP 010	10	5	12,58	2,88	11,92	3,12	11,24	3,39	10,54	3,69	9,81	4,02	9,06	4,39
	11	6	13,03	2,91	12,35	3,15	11,65	3,42	10,92	3,73	10,16	4,07	9,38	4,44
	12	7	13,50	2,94	12,79	3,18	12,06	3,46	11,30	3,77	10,52	4,12	9,71	4,49
	13	8	13,97	2,98	13,24	3,22	12,48	3,50	11,69	3,81	10,88	4,16	10,04	4,55
	14	9	14,45	3,01	13,69	3,26	12,91	3,54	12,09	3,86	11,25	4,21	10,38	4,60
	15	10	14,94	3,05	14,16	3,29	13,34	3,58	12,50	3,90	11,63	4,26	10,73	4,66
	16	11	15,45	3,08	14,63	3,33	13,79	3,62	12,91	3,95	12,01	4,31	11,08	4,72
	23	18	16,74	3,18	15,85	3,43	14,93	3,73	13,98	4,07	13,01	4,46	12,01	4,89
MCP 013M	10	5	14,95	3,68	14,15	3,94	13,34	4,25	12,52	4,62	11,69	5,04	10,85	5,52
	11	6	15,47	3,72	14,64	3,98	13,81	4,29	12,96	4,67	12,10	5,10	11,23	5,59
	12	7	16,00	3,75	15,14	4,02	14,28	4,34	13,40	4,72	12,51	5,16	11,61	5,65
	13	8	16,53	3,79	15,65	4,06	14,76	4,39	13,85	4,77	12,93	5,22	12,00	5,72
	14	9	17,08	3,84	16,17	4,11	15,25	4,44	14,31	4,83	13,36	5,28	12,39	5,78
	15	10	17,64	3,88	16,70	4,16	15,75	4,50	14,78	4,89	13,79	5,34	12,79	5,84
	16	11	18,21	3,93	17,24	4,22	16,26	4,56	15,26	4,95	14,24	5,40	13,20	5,90
	23	18	19,97	4,10	18,92	4,40	17,84	4,75	16,73	5,14	15,60	5,57	14,44	6,05
MCP 013	10	5	14,96	3,59	14,24	3,86	13,49	4,17	12,70	4,52	11,89	4,90	11,05	5,31
	11	6	15,49	3,63	14,74	3,91	13,96	4,22	13,15	4,57	12,31	4,95	11,44	5,37
	12	7	16,02	3,68	15,25	3,96	14,44	4,27	13,60	4,62	12,73	5,01	11,83	5,44
	13	8	16,56	3,74	15,76	4,01	14,93	4,32	14,06	4,67	13,16	5,07	12,23	5,50
	14	9	17,12	3,79	16,29	4,06	15,43	4,37	14,53	4,73	13,60	5,13	12,64	5,57
	15	10	17,68	3,84	16,82	4,11	15,93	4,42	15,01	4,78	14,05	5,19	13,06	5,64
	16	11	18,25	3,90	17,37	4,16	16,45	4,48	15,49	4,84	14,51	5,25	13,48	5,71
	23	18	20,03	4,07	19,05	4,33	18,05	4,65	17,00	5,03	15,92	5,46	14,81	5,95

All copying, even partial, of this manual is strictly forbidden

5 PERFORMANCE

5.1 MCP COOLING CAPACITIES

Tbs_1 Air inlet temperature (dry bulb)
Tw in/out Water inlet/outlet temperature
PF Cooling capacity
PA Total power input including pump

	Tbs_1		20		25		30		35		40		45	
	Tw in	Tw out	PF	PA	PF	PA	PF	PA	PF	PA	PF	PA	PF	PA
	[°C]	[°C]	kW	kW	kW	kW	kW	kW	kW	kW	kW	kW	kW	kW
MCP 015	10	5	17,39	4,24	16,58	4,55	15,73	4,94	14,82	5,40	13,87	5,93	12,86	6,53
	11	6	17,95	4,29	17,12	4,61	16,24	5,01	15,31	5,47	14,32	6,01	13,29	6,63
	12	7	18,52	4,35	17,67	4,68	16,76	5,08	15,80	5,55	14,79	6,10	13,72	6,72
	13	8	19,10	4,41	18,22	4,74	17,29	5,15	16,30	5,63	15,26	6,19	14,16	6,82
	14	9	19,69	4,48	18,78	4,81	17,82	5,22	16,81	5,71	15,74	6,28	14,61	6,92
	15	10	20,28	4,55	19,35	4,89	18,37	5,30	17,32	5,80	16,22	6,37	15,07	7,03
	16	11	20,89	4,62	19,93	4,96	18,92	5,38	17,84	5,89	16,71	6,47	15,53	7,14
	23	18	22,75	4,84	21,71	5,20	20,60	5,65	19,44	6,18	18,23	6,79	16,96	7,49
MCP 018	10	5	21,67	6,06	20,58	6,39	19,46	6,75	18,32	7,13	17,17	7,54	15,99	7,97
	11	6	22,41	6,15	21,28	6,48	20,13	6,84	18,95	7,22	17,76	7,64	16,54	8,08
	12	7	23,17	6,24	22,00	6,57	20,81	6,93	19,60	7,32	18,36	7,74	17,11	8,18
	13	8	23,94	6,33	22,74	6,66	21,51	7,03	20,26	7,42	18,98	7,84	17,68	8,30
	14	9	24,73	6,42	23,49	6,76	22,22	7,12	20,93	7,52	19,61	7,95	18,26	8,42
	15	10	25,53	6,52	24,25	6,85	22,94	7,23	21,61	7,63	20,25	8,07	18,86	8,55
	16	11	26,35	6,61	25,03	6,95	23,68	7,33	22,30	7,75	20,89	8,20	19,46	8,69
	23	18	29,43	6,99	27,95	7,34	26,44	7,75	24,89	8,22	23,31	8,75	21,68	9,33
MCP 027	10	5	30,65	8,05	29,04	8,52	27,39	9,07	25,70	9,69	23,96	10,38	22,19	11,14
	11	6	31,69	8,18	30,02	8,66	28,30	9,21	26,54	9,84	24,74	10,54	22,89	11,32
	12	7	32,74	8,31	31,01	8,80	29,23	9,36	27,40	10,00	25,53	10,72	23,61	11,51
	13	8	33,81	8,45	32,01	8,94	30,16	9,52	28,27	10,17	26,33	10,90	24,34	11,71
	14	9	34,89	8,60	33,03	9,10	31,11	9,68	29,15	10,34	27,14	11,09	25,09	11,92
	15	10	35,99	8,75	34,06	9,25	32,08	9,84	30,05	10,52	27,97	11,29	25,84	12,14
	16	11	37,11	8,91	35,10	9,41	33,05	10,02	30,95	10,71	28,81	11,50	26,62	12,38
	23	18	40,65	9,42	38,42	9,96	36,15	10,61	33,85	11,38	31,51	12,25	29,13	13,24
MCP 032	10	5	38,04	9,52	36,18	10,15	34,24	10,85	32,25	11,61	30,20	12,43	28,08	13,33
	11	6	39,30	9,65	37,37	10,28	35,37	10,99	33,31	11,76	31,19	12,60	29,01	13,51
	12	7	40,58	9,78	38,58	10,42	36,52	11,14	34,40	11,92	32,21	12,78	29,96	13,70
	13	8	41,89	9,91	39,83	10,56	37,70	11,29	35,51	12,08	33,25	12,95	30,92	13,89
	14	9	43,22	10,05	41,09	10,71	38,89	11,44	36,63	12,25	34,30	13,13	31,90	14,09
	15	10	44,57	10,19	42,38	10,86	40,11	11,60	37,78	12,42	35,37	13,31	32,90	14,28
	16	11	45,95	10,34	43,69	11,02	41,35	11,77	38,94	12,59	36,47	13,50	33,91	14,47
	23	18	50,24	10,81	47,76	11,52	45,19	12,29	42,55	13,14	39,83	14,05	37,03	15,04
MCP 040	10	5	44,94	11,88	42,64	12,52	40,30	13,32	37,91	14,29	35,48	15,43	33,01	16,73
	11	6	46,41	12,07	44,03	12,72	41,61	13,53	39,14	14,51	36,63	15,66	34,07	16,98
	12	7	47,90	12,27	45,45	12,93	42,95	13,75	40,40	14,74	37,80	15,90	35,16	17,24
	13	8	49,42	12,48	46,89	13,14	44,31	13,97	41,68	14,97	38,99	16,15	36,26	17,50
	14	9	50,97	12,70	48,36	13,36	45,70	14,20	42,98	15,22	40,20	16,41	37,38	17,77
	15	10	52,55	12,92	49,86	13,59	47,10	14,44	44,29	15,47	41,43	16,67	38,50	18,05
	16	11	54,15	13,15	51,37	13,83	48,53	14,69	45,63	15,72	42,67	16,94	39,64	18,33
	23	18	59,63	13,96	56,55	14,67	53,39	15,56	50,16	16,63	46,84	17,88	43,44	19,31
MCP T18M	10	5	20,59	5,32	19,56	5,68	18,48	6,10	17,34	6,59	16,15	7,15	14,90	7,78
	11	6	21,34	5,38	20,27	5,73	19,15	6,16	17,96	6,65	16,72	7,22	15,42	7,86
	12	7	22,11	5,43	21,00	5,79	19,83	6,22	18,60	6,72	17,31	7,30	15,95	7,95
	13	8	22,90	5,48	21,75	5,84	20,53	6,28	19,25	6,79	17,90	7,38	16,49	8,04
	14	9	23,71	5,54	22,51	5,90	21,25	6,34	19,92	6,86	18,51	7,46	17,04	8,14
	15	10	24,53	5,60	23,29	5,96	21,98	6,41	20,59	6,94	19,13	7,55	17,60	8,24
	16	11	25,36	5,66	24,08	6,03	22,72	6,48	21,28	7,02	19,77	7,64	18,17	8,35
	23	18	28,43	5,89	26,97	6,27	25,43	6,76	23,80	7,34	22,07	8,01	20,25	8,78
MCP T18	10	5	20,88	5,08	19,81	5,46	18,70	5,89	17,55	6,38	16,35	6,92	15,11	7,52
	11	6	21,61	5,13	20,51	5,51	19,36	5,95	18,17	6,45	16,93	7,00	15,65	7,61
	12	7	22,36	5,19	21,22	5,57	20,03	6,02	18,80	6,52	17,52	7,08	16,19	7,70
	13	8	23,13	5,25	21,95	5,64	20,72	6,09	19,45	6,60	18,12	7,17	16,75	7,80
	14	9	23,91	5,31	22,69	5,70	21,42	6,16	20,10	6,67	18,73	7,26	17,31	7,90
	15	10	24,70	5,37	23,45	5,77	22,14	6,23	20,77	6,76	19,36	7,35	17,89	8,00
	16	11	25,52	5,44	24,22	5,84	22,86	6,31	21,45	6,84	19,99	7,44	18,47	8,11
	23	18	28,48	5,70	27,02	6,11	25,50	6,61	23,92	7,18	22,27	7,83	20,56	8,55
MCP T22M	10	5	24,02	5,93	22,75	6,41	21,41	6,96	20,02	7,58	18,56	8,28	17,05	9,05
	11	6	24,86	5,99	23,53	6,47	22,15	7,03	20,70	7,67	19,19	8,37	17,62	9,15
	12	7	25,71	6,05	24,34	6,54	22,90	7,11	21,40	7,75	19,83	8,47	18,20	9,27
	13	8	26,58	6,11	25,16	6,61	23,67	7,18	22,11	7,84	20,49	8,57	18,79	9,38
	14	9	27,46	6,17	25,99	6,68	24,45	7,26	22,84	7,93	21,15	8,67	19,39	9,50
	15	10	28,36	6,23	26,84	6,75	25,25	7,34	23,58	8,02	21,82	8,78	19,99	9,63
	16	11	29,27	6,29	27,71	6,82	26,06	7,43	24,33	8,12	22,51	8,89	20,61	9,76
	23	18	32,30	6,51	30,58	7,07	28,75	7,71	26,81	8,45	24,77	9,28	22,63	10,20

All copying, even partial, of this manual is strictly forbidden

5 PERFORMANCE

5.1 MCP COOLING CAPACITIES

Tbs_1 Air inlet temperature (dry bulb)
Tw in/out Water inlet/outlet temperature
PF Cooling capacity
PA Total power input including pump

	Tbs1		20		25		30		35		40		45	
	Tw in	Tw out	PF	PA	PF	PA	PF	PA	PF	PA	PF	PA	PF	PA
	[°C]	[°C]	kW	kW	kW	kW	kW	kW	kW	kW	kW	kW	kW	kW
MCP T22	10	5	24,08	5,76	22,81	6,24	21,50	6,78	20,14	7,38	18,74	8,06	17,29	8,79
	11	6	24,95	5,82	23,64	6,30	22,27	6,85	20,86	7,47	19,40	8,15	17,90	8,89
	12	7	25,85	5,89	24,48	6,37	23,07	6,93	21,60	7,55	20,08	8,24	18,52	9,00
	13	8	26,76	5,95	25,34	6,45	23,87	7,01	22,35	7,64	20,78	8,33	19,15	9,10
	14	9	27,69	6,02	26,22	6,52	24,69	7,09	23,12	7,72	21,49	8,43	19,80	9,21
	15	10	28,63	6,10	27,11	6,60	25,53	7,17	23,90	7,82	22,21	8,54	20,47	9,33
	16	11	29,60	6,17	28,02	6,67	26,39	7,25	24,69	7,91	22,95	8,64	21,15	9,45
	23	18	32,92	6,43	31,14	6,95	29,30	7,55	27,42	8,25	25,48	9,03	23,49	9,90
MCP T24M	10	5	29,26	7,47	27,64	8,05	26,00	8,74	24,35	9,55	22,67	10,47	20,97	11,50
	11	6	30,25	7,55	28,58	8,14	26,88	8,84	25,17	9,67	23,43	10,60	21,67	11,66
	12	7	31,25	7,64	29,53	8,24	27,78	8,96	26,00	9,79	24,20	10,74	22,37	11,81
	13	8	32,28	7,74	30,49	8,35	28,68	9,07	26,85	9,92	24,98	10,88	23,09	11,96
	14	9	33,32	7,84	31,48	8,46	29,61	9,20	27,71	10,05	25,78	11,02	23,81	12,11
	15	10	34,38	7,95	32,48	8,58	30,55	9,33	28,58	10,19	26,58	11,16	24,54	12,25
	16	11	35,45	8,06	33,49	8,71	31,50	9,46	29,46	10,33	27,39	11,30	25,28	12,38
	23	18	38,66	8,45	36,52	9,12	34,33	9,88	32,08	10,73	29,79	11,67	27,43	12,70
MCP T24	10	5	29,32	7,12	27,84	7,70	26,30	8,35	24,71	9,06	23,06	9,85	21,35	10,70
	11	6	30,32	7,22	28,79	7,80	27,20	8,45	25,55	9,17	23,84	9,97	22,06	10,84
	12	7	31,34	7,33	29,76	7,90	28,11	8,56	26,40	9,29	24,63	10,10	22,80	10,98
	13	8	32,38	7,43	30,74	8,01	29,04	8,67	27,27	9,41	25,44	10,23	23,54	11,13
	14	9	33,43	7,54	31,74	8,12	29,98	8,79	28,15	9,53	26,26	10,37	24,30	11,29
	15	10	34,51	7,66	32,75	8,23	30,93	8,90	29,05	9,66	27,09	10,51	25,07	11,45
	16	11	35,59	7,77	33,78	8,35	31,90	9,03	29,95	9,80	27,94	10,66	25,86	11,62
	23	18	38,83	8,12	36,85	8,71	34,80	9,40	32,67	10,21	30,47	11,14	28,21	12,17
MCP T30	10	5	35,46	8,23	33,86	8,82	32,17	9,56	30,37	10,45	28,48	11,48	26,48	12,66
	11	6	36,61	8,33	34,97	8,94	33,22	9,69	31,38	10,59	29,43	11,63	27,38	12,83
	12	7	37,78	8,45	36,09	9,06	34,30	9,82	32,40	10,73	30,39	11,79	28,28	13,01
	13	8	38,97	8,56	37,23	9,18	35,39	9,95	33,44	10,88	31,38	11,96	29,21	13,19
	14	9	40,18	8,69	38,40	9,31	36,50	10,10	34,49	11,03	32,37	12,13	30,14	13,38
	15	10	41,41	8,82	39,57	9,45	37,62	10,24	35,56	11,19	33,39	12,30	31,10	13,57
	16	11	42,66	8,95	40,77	9,59	38,76	10,39	36,64	11,36	34,41	12,49	32,07	13,78
	23	18	46,25	9,36	44,20	10,02	42,04	10,85	39,76	11,86	37,37	13,04	34,86	14,39

All copying, even partial, of this manual is strictly forbidden

5 PERFORMANCE

5.2 MCP HEATING OR DHW PRODUCTION CAPACITIES

Tbs_1 Air inlet temperature (dry bulb)
Tw in/out Water inlet/outlet temperature
PT Heating capacity
PA Total power input including pump
RH Relative humidity

	Tbs_1 / RH		-10°C / 90%		-5 °C / 90 %		0 °C / 90 %		7 °C / 88 %		15 °C / 80 %		20°C / 70 %		25°C / 50%		30°C / 50%		35°C / 50%	
	Tw in	Tw out	PT	PA	PT	PA	PT	PA	PT	PA	PT	PA	PT	PA	PT	PA	PT	PA	PT	PA
	[°C]	[°C]	kW	kW	kW	kW	kW	kW	kW	kW	kW	kW	kW	kW	kW	kW	kW	kW	kW	kW
MCP 007M	25	30	6,15	2,06	6,75	2,11	7,73	2,18	9,74	2,32	12,28	2,48	13,32	2,54	13,69	2,56	13,65	2,56	14,01	2,59
	30	35	6,04	2,22	6,61	2,27	7,53	2,34	9,43	2,49	11,85	2,65	12,85	2,72	13,19	2,75	13,15	2,75	13,51	2,77
	35	40	5,93	2,39	6,47	2,44	7,35	2,53	9,14	2,68	11,44	2,86	12,39	2,93	12,71	2,96	12,68	2,96	13,01	2,98
	40	45	5,83	2,57	6,35	2,63	7,17	2,73	8,88	2,90	11,05	3,09	11,94	3,17	12,25	3,20	12,22	3,20	12,53	3,23
	45	50	5,74	2,76	6,22	2,83	7,00	2,94	8,62	3,14	10,68	3,35	11,51	3,44	11,80	3,47	11,77	3,47	12,06	3,50
	50	55	5,65	2,96	6,11	3,05	6,85	3,18	8,39	3,40	10,33	3,65	11,10	3,73	11,37	3,77	11,34	3,76	11,60	3,79
	55	60	5,57	3,17	6,00	3,28	6,70	3,43	8,18	3,69	10,00	3,96	10,71	4,06	10,94	4,09	10,92	4,09	11,16	4,12
MCP 007	25	30	5,98	1,99	6,59	2,04	7,58	2,11	9,62	2,24	12,18	2,39	13,23	2,45	13,59	2,48	13,55	2,47	13,92	2,50
	30	35	5,89	2,14	6,47	2,19	7,40	2,27	9,32	2,40	11,74	2,56	12,73	2,63	13,08	2,65	13,04	2,65	13,39	2,68
	35	40	5,80	2,31	6,34	2,36	7,22	2,44	9,04	2,59	11,33	2,76	12,25	2,83	12,57	2,86	12,54	2,85	12,86	2,88
	40	45	5,70	2,48	6,22	2,54	7,06	2,63	8,78	2,80	10,93	2,98	11,79	3,06	12,09	3,09	12,05	3,08	12,35	3,11
	45	50	5,59	2,66	6,10	2,74	6,91	2,84	8,55	3,03	10,56	3,23	11,34	3,32	11,61	3,34	11,58	3,34	11,85	3,37
	50	55	5,49	2,85	5,98	2,94	6,76	3,07	8,34	3,28	10,21	3,51	10,91	3,60	11,14	3,63	11,12	3,63	11,35	3,65
	55	60	5,38	3,05	5,86	3,16	6,63	3,31	8,16	3,56	9,89	3,82	10,50	3,91	10,69	3,94	10,67	3,94	10,86	3,97
MCP 009M	25	30	7,66	2,68	8,41	2,73	9,63	2,81	12,16	2,96	15,34	3,16	16,63	3,25	17,08	3,28	17,03	3,28	17,48	3,31
	30	35	7,54	2,88	8,25	2,94	9,41	3,02	11,82	3,19	14,84	3,41	16,07	3,51	16,49	3,54	16,45	3,54	16,88	3,58
	35	40	7,43	3,11	8,11	3,17	9,21	3,27	11,47	3,45	14,34	3,70	15,50	3,82	15,91	3,86	15,86	3,85	16,28	3,90
	40	45	7,35	3,36	7,98	3,44	9,02	3,54	11,14	3,75	13,84	4,04	14,94	4,18	15,33	4,23	15,28	4,22	15,68	4,27
	45	50	7,28	3,65	7,88	3,73	8,84	3,85	10,81	4,09	13,34	4,42	14,38	4,59	14,74	4,65	14,70	4,64	15,07	4,71
	50	55	7,23	3,96	7,78	4,05	8,67	4,19	10,49	4,46	12,84	4,86	13,82	5,05	14,16	5,13	14,12	5,12	14,47	5,19
	55	60	7,20	4,30	7,71	4,41	8,51	4,56	10,17	4,87	12,34	5,34	13,25	5,57	13,58	5,66	13,54	5,65	13,87	5,74
MCP 009	25	30	7,71	2,52	8,47	2,56	9,70	2,63	12,23	2,79	15,39	3,01	16,66	3,10	17,10	3,14	17,05	3,14	17,49	3,17
	30	35	7,53	2,71	8,26	2,76	9,44	2,84	11,86	3,01	14,88	3,25	16,09	3,36	16,51	3,39	16,47	3,39	16,89	3,43
	35	40	7,36	2,92	8,06	2,98	9,19	3,07	11,50	3,27	14,38	3,53	15,54	3,65	15,94	3,69	15,89	3,69	16,30	3,73
	40	45	7,20	3,15	7,87	3,22	8,95	3,33	11,15	3,55	13,89	3,85	14,99	3,99	15,37	4,04	15,32	4,03	15,71	4,08
	45	50	7,04	3,41	7,68	3,49	8,71	3,61	10,80	3,86	13,39	4,20	14,44	4,36	14,80	4,42	14,76	4,42	15,13	4,48
	50	55	6,90	3,69	7,51	3,78	8,48	3,92	10,46	4,20	12,91	4,59	13,90	4,78	14,25	4,86	14,21	4,85	14,56	4,92
	55	60	6,75	3,99	7,34	4,10	8,26	4,25	10,12	4,57	12,43	5,02	13,37	5,25	13,70	5,33	13,66	5,32	14,00	5,41
MCP 010M	25	30	8,64	2,90	9,52	2,96	10,92	3,05	13,78	3,23	17,29	3,42	18,70	3,49	19,18	3,51	19,13	3,51	19,63	3,54
	30	35	8,51	3,15	9,34	3,22	10,68	3,32	13,39	3,50	16,74	3,72	18,09	3,81	18,56	3,84	18,51	3,83	18,99	3,86
	35	40	8,37	3,42	9,17	3,50	10,44	3,61	13,00	3,82	16,18	4,07	17,47	4,17	17,92	4,21	17,87	4,20	18,33	4,24
	40	45	8,24	3,72	9,00	3,80	10,20	3,93	12,62	4,17	15,63	4,46	16,85	4,58	17,27	4,62	17,22	4,62	17,66	4,66
	45	50	8,10	4,04	8,83	4,13	9,97	4,28	12,25	4,56	15,07	4,90	16,21	5,04	16,61	5,09	16,56	5,08	16,97	5,13
	50	55	7,96	4,38	8,66	4,49	9,74	4,66	11,88	4,98	14,51	5,38	15,56	5,54	15,93	5,60	15,89	5,59	16,26	5,65
	55	60	7,82	4,75	8,49	4,88	9,52	5,07	11,52	5,44	13,94	5,90	14,90	6,09	15,24	6,16	15,20	6,15	15,54	6,22
MCP 010	25	30	8,63	2,83	9,51	2,89	10,94	2,97	13,91	3,15	17,63	3,37	19,13	3,46	19,65	3,49	19,59	3,48	20,11	3,51
	30	35	8,47	3,07	9,31	3,13	10,68	3,23	13,50	3,42	17,04	3,66	18,47	3,75	18,96	3,79	18,90	3,78	19,40	3,82
	35	40	8,33	3,33	9,13	3,40	10,43	3,51	13,11	3,73	16,47	3,99	17,82	4,10	18,29	4,14	18,24	4,13	18,72	4,17
	40	45	8,22	3,61	8,97	3,70	10,20	3,83	12,72	4,07	15,90	4,36	17,20	4,49	17,65	4,53	17,60	4,53	18,06	4,57
	45	50	8,13	3,92	8,84	4,02	9,99	4,17	12,35	4,44	15,34	4,78	16,59	4,93	17,03	4,98	16,98	4,97	17,42	5,03
	50	55	8,07	4,26	8,74	4,38	9,80	4,55	11,98	4,85	14,80	5,23	16,00	5,41	16,42	5,48	16,38	5,47	16,82	5,54
	55	60	8,04	4,63	8,66	4,76	9,63	4,95	11,62	5,28	14,26	5,73	15,43	5,94	15,85	6,02	15,80	6,01	16,23	6,10
MCP 013M	25	30	10,73	3,64	11,78	3,71	13,48	3,80	16,94	3,99	21,28	4,29	23,05	4,44	23,67	4,50	23,60	4,49	24,22	4,55
	30	35	10,50	3,92	11,52	3,99	13,14	4,10	16,44	4,31	20,59	4,63	22,27	4,78	22,86	4,84	22,79	4,83	23,38	4,89
	35	40	10,30	4,21	11,28	4,30	12,83	4,43	15,99	4,69	19,93	5,03	21,50	5,17	22,05	5,22	21,99	5,21	22,54	5,26
	40	45	10,11	4,52	11,05	4,64	12,55	4,81	15,58	5,12	19,29	5,47	20,75	5,59	21,24	5,63	21,19	5,63	21,68	5,66
	45	50	9,93	4,84	10,85	5,00	12,30	5,22	15,21	5,61	18,68	5,97	20,00	6,06	20,44	6,08	20,39	6,08	20,83	6,09
	50	55	9,77	5,19	10,67	5,38	12,09	5,67	14,89	6,15	18,10	6,53	19,26	6,57	19,64	6,57	19,59	6,57	19,96	6,55
	55	60	9,63	5,55	10,50	5,79	11,90	6,15	14,61	6,75	17,55	7,13	18,53	7,12	18,84	7,09	18,80	7,09	19,10	7,05

All copying, even partial, of this manual is strictly forbidden

5 PERFORMANCE

5.2 MCP HEATING CAPACITIES

Tbs_1 Air inlet temperature (dry bulb)
Tw in/out Water inlet/outlet temperature
PT Heating capacity
PA Total power input including pump
RH Relative humidity

	Tbs1 / RH		-10°C / 90%		-5 °C / 90 %		0 °C / 90 %		7 °C / 88 %		15 °C / 80 %		20°C / 70 %		25°C / 50%		30°C / 50%		35°C / 50%	
	Tw in	Tw out	PT	PA	PT	PA	PT	PA	PT	PA	PT	PA	PT	PA	PT	PA	PT	PA	PT	PA
	[°C]	[°C]	kW	kW	kW	kW	kW	kW	kW	kW	kW	kW	kW	kW	kW	kW	kW	kW	kW	kW
MCP 013	25	30	10,60	3,49	11,68	3,57	13,43	3,69	17,00	3,95	21,40	4,28	23,16	4,41	23,77	4,46	23,70	4,46	24,31	4,50
	30	35	10,43	3,78	11,47	3,87	13,15	4,01	16,56	4,27	20,76	4,60	22,43	4,73	23,02	4,78	22,95	4,77	23,54	4,82
	35	40	10,27	4,09	11,27	4,20	12,88	4,35	16,12	4,63	20,12	4,97	21,73	5,11	22,29	5,16	22,23	5,16	22,79	5,21
	40	45	10,12	4,43	11,07	4,55	12,60	4,71	15,69	5,02	19,50	5,39	21,05	5,55	21,59	5,61	21,53	5,60	22,07	5,66
	45	50	9,97	4,78	10,89	4,92	12,34	5,10	15,26	5,45	18,90	5,87	20,39	6,05	20,91	6,12	20,85	6,11	21,38	6,18
	50	55	9,84	5,16	10,70	5,31	12,07	5,52	14,83	5,90	18,31	6,39	19,75	6,61	20,25	6,69	20,20	6,68	20,71	6,76
	55	60	9,71	5,56	10,53	5,72	11,81	5,96	14,41	6,40	17,73	6,97	19,13	7,23	19,62	7,33	19,57	7,31	20,07	7,41
MCP 015	25	30	12,38	3,97	13,57	4,03	15,49	4,15	19,37	4,43	24,12	4,83	26,00	5,00	26,65	5,07	26,58	5,06	27,23	5,12
	30	35	12,12	4,28	13,28	4,36	15,14	4,49	18,91	4,80	23,50	5,22	25,32	5,40	25,95	5,47	25,88	5,46	26,51	5,52
	35	40	11,88	4,64	13,01	4,73	14,82	4,89	18,47	5,24	22,91	5,69	24,67	5,89	25,28	5,96	25,21	5,95	25,83	6,02
	40	45	11,68	5,04	12,77	5,16	14,53	5,36	18,05	5,75	22,34	6,25	24,05	6,46	24,64	6,53	24,57	6,52	25,17	6,60
	45	50	11,50	5,49	12,57	5,65	14,27	5,88	17,65	6,33	21,79	6,88	23,45	7,11	24,02	7,20	23,96	7,19	24,55	7,27
	50	55	11,35	5,99	12,39	6,18	14,03	6,47	17,28	6,99	21,26	7,60	22,88	7,85	23,44	7,95	23,38	7,94	23,96	8,03
	55	60	11,22	6,53	12,24	6,78	13,83	7,12	16,92	7,71	20,75	8,39	22,33	8,68	22,89	8,79	22,82	8,77	23,40	8,88
MCP 018	25	30	16,21	5,60	17,80	5,76	20,37	6,02	25,59	6,54	32,07	7,21	34,67	7,49	35,57	7,59	35,47	7,58	36,39	7,68
	30	35	15,80	5,91	17,34	6,09	19,80	6,36	24,81	6,91	31,02	7,61	33,53	7,91	34,40	8,02	34,31	8,01	35,19	8,13
	35	40	15,41	6,26	16,89	6,45	19,25	6,74	24,04	7,30	29,99	8,05	32,42	8,40	33,26	8,54	33,17	8,52	34,03	8,66
	40	45	15,03	6,64	16,45	6,85	18,72	7,15	23,27	7,72	28,97	8,54	31,32	8,96	32,15	9,12	32,06	9,11	32,90	9,28
	45	50	14,66	7,06	16,04	7,28	18,20	7,59	22,51	8,17	27,96	9,08	30,26	9,59	31,07	9,79	30,98	9,77	31,81	9,99
	50	55	14,31	7,51	15,64	7,75	17,69	8,07	21,75	8,64	26,96	9,66	29,21	10,28	30,02	10,53	29,93	10,50	30,76	10,77
	55	60	13,98	8,00	15,26	8,26	17,21	8,57	21,00	9,14	25,98	10,30	28,19	11,04	29,00	11,34	28,91	11,31	29,74	11,64
MCP 027	25	30	21,35	6,96	23,54	7,15	27,10	7,47	34,41	8,15	43,48	9,06	47,11	9,44	48,37	9,58	48,23	9,56	49,50	9,70
	30	35	20,90	7,41	23,00	7,62	26,41	7,96	33,37	8,67	41,99	9,60	45,45	10,00	46,65	10,14	46,52	10,13	47,74	10,28
	35	40	20,49	7,89	22,50	8,13	25,75	8,50	32,35	9,25	40,54	10,24	43,86	10,67	45,01	10,83	44,88	10,81	46,05	10,97
	40	45	20,11	8,41	22,04	8,68	25,13	9,10	31,37	9,90	39,14	10,96	42,32	11,45	43,44	11,62	43,31	11,60	44,46	11,79
	45	50	19,76	8,96	21,62	9,28	24,55	9,75	30,40	10,62	37,77	11,78	40,85	12,33	41,94	12,53	41,82	12,51	42,94	12,73
	50	55	19,44	9,56	21,23	9,93	24,00	10,45	29,46	11,40	36,44	12,69	39,44	13,32	40,52	13,56	40,40	13,53	41,51	13,78
	55	60	19,16	10,19	20,89	10,62	23,49	11,21	28,55	12,25	35,16	13,70	38,10	14,42	39,16	14,70	39,04	14,66	40,16	14,96
MCP 032	25	30	27,99	8,78	30,67	9,05	34,97	9,45	43,68	10,22	54,45	11,17	58,79	11,58	60,29	11,72	60,12	11,70	61,64	11,85
	30	35	27,35	9,36	29,94	9,66	34,08	10,10	42,43	10,92	52,77	11,93	56,91	12,35	58,35	12,49	58,19	12,48	59,64	12,62
	35	40	26,69	9,97	29,19	10,30	33,17	10,78	41,19	11,69	51,08	12,76	55,02	13,19	56,38	13,33	56,23	13,32	57,61	13,46
	40	45	26,00	10,59	28,41	10,96	32,24	11,51	39,95	12,52	49,39	13,67	53,12	14,09	54,39	14,23	54,25	14,22	55,54	14,36
	45	50	25,28	11,24	27,60	11,65	31,30	12,27	38,71	13,42	47,69	14,65	51,19	15,07	52,38	15,20	52,25	15,19	53,45	15,32
	50	55	24,53	11,91	26,77	12,37	30,33	13,08	37,47	14,38	45,99	15,71	49,25	16,11	50,35	16,24	50,23	16,22	51,33	16,33
	55	60	23,76	12,60	25,91	13,12	29,35	13,93	36,23	15,41	44,28	16,83	47,29	17,23	48,29	17,33	48,18	17,32	49,17	17,41
MCP 040	25	30	32,86	10,24	36,06	10,58	41,19	11,12	51,66	12,22	64,70	13,65	69,95	14,26	71,77	14,47	71,56	14,44	73,41	14,66
	30	35	32,18	10,97	35,24	11,33	40,14	11,88	50,14	13,00	62,59	14,44	67,60	15,05	69,33	15,26	69,14	15,24	70,89	15,46
	35	40	31,57	11,82	34,49	12,20	39,18	12,78	48,73	13,94	60,59	15,41	65,34	16,03	66,98	16,24	66,80	16,22	68,46	16,44
	40	45	31,04	12,77	33,83	13,18	38,32	13,81	47,43	15,04	58,69	16,57	63,18	17,19	64,72	17,40	64,55	17,38	66,11	17,60
	45	50	30,58	13,84	33,25	14,29	37,54	14,98	46,24	16,30	56,91	17,90	61,11	18,53	62,54	18,75	62,38	18,72	63,83	18,94
	50	55	30,19	15,02	32,75	15,52	36,85	16,28	45,16	17,72	55,22	19,41	59,13	20,06	60,46	20,27	60,31	20,25	61,64	20,47
	55	60	29,87	16,31	32,32	16,87	36,26	17,72	44,19	19,31	53,65	21,10	57,25	21,76	58,46	21,98	58,32	21,96	59,53	22,18
MCP T18M	25	30	15,38	5,35	16,89	5,45	19,34	5,61	24,40	5,93	30,74	6,35	33,29	6,54	34,18	6,61	34,08	6,60	34,98	6,68
	30	35	15,13	5,75	16,56	5,86	18,89	6,04	23,69	6,39	29,70	6,86	32,13	7,07	32,97	7,15	32,88	7,14	33,74	7,22
	35	40	14,90	6,20	16,26	6,33	18,46	6,53	22,98	6,92	28,66	7,45	30,96	7,70	31,77	7,80	31,68	7,79	32,49	7,88
	40	45	14,72	6,71	15,99	6,86	18,05	7,08	22,28	7,52	27,62	8,14	29,80	8,44	30,56	8,55	30,47	8,54	31,25	8,65
	45	50	14,57	7,27	15,76	7,44	17,67	7,69	21,59	8,19	26,58	8,92	28,63	9,27	29,35	9,41	29,26	9,39	30,00	9,53
	50	55	14,45	7,90	15,55	8,08	17,31	8,37	20,92	8,94	25,53	9,79	27,46	10,21	28,13	10,37	28,06	10,35	28,75	10,52
	55	60	14,37	8,58	15,38	8,78	16,97	9,10	20,25	9,75	24,49	10,76	26,28	11,25	26,91	11,44	26,84	11,42	27,49	11,62

All copying, even partial, of this manual is strictly forbidden

5 PERFORMANCE

5.2 MCP HEATING CAPACITIES

Tbs_1 Air inlet temperature (dry bulb)
Tw in/out Water inlet/outlet temperature
PT Heating capacity
PA Total power input including pump
RH Relative humidity

	Tbs1 / RH		-10°C / 90%		-5 °C / 90 %		0 °C / 90 %		7 °C / 88 %		15 °C / 80 %		20°C / 70 %		25°C / 50%		30°C / 50%		35°C / 50%	
	Tw in	Tw out	PT	PA	PT	PA	PT	PA	PT	PA	PT	PA	PT	PA	PT	PA	PT	PA	PT	PA
	[°C]	[°C]	kW	kW	kW	kW	kW	kW	kW	kW	kW	kW	kW	kW	kW	kW	kW	kW	kW	kW
MCP T18	25	30	15,31	5,15	16,81	5,25	19,23	5,41	24,19	5,74	30,37	6,21	32,84	6,42	33,69	6,50	33,60	6,49	34,46	6,57
	30	35	14,97	5,55	16,41	5,66	18,73	5,83	23,48	6,21	29,38	6,73	31,74	6,96	32,55	7,04	32,46	7,03	33,28	7,12
	35	40	14,65	5,98	16,02	6,11	18,24	6,31	22,78	6,74	28,40	7,31	30,65	7,57	31,42	7,67	31,33	7,66	32,12	7,76
	40	45	14,34	6,46	15,65	6,61	17,77	6,85	22,09	7,32	27,43	7,97	29,57	8,28	30,31	8,39	30,23	8,38	30,98	8,49
	45	50	14,04	6,99	15,30	7,16	17,32	7,43	21,41	7,96	26,47	8,71	28,51	9,06	29,21	9,20	29,13	9,18	29,85	9,32
	50	55	13,75	7,55	14,96	7,76	16,88	8,06	20,74	8,66	25,52	9,52	27,46	9,94	28,13	10,09	28,05	10,08	28,74	10,24
	55	60	13,48	8,17	14,64	8,40	16,45	8,74	20,09	9,42	24,59	10,41	26,42	10,89	27,06	11,08	26,99	11,06	27,65	11,26
MCP T22M	25	30	17,23	5,90	18,96	6,03	21,74	6,23	27,34	6,60	34,20	7,04	36,95	7,21	37,90	7,27	37,80	7,26	38,76	7,32
	30	35	16,96	6,40	18,61	6,55	21,25	6,77	26,56	7,18	33,10	7,67	35,73	7,88	36,64	7,95	36,54	7,94	37,47	8,01
	35	40	16,69	6,95	18,27	7,12	20,77	7,36	25,79	7,83	31,99	8,40	34,49	8,64	35,35	8,72	35,26	8,71	36,14	8,80
	40	45	16,42	7,55	17,92	7,74	20,29	8,02	25,03	8,55	30,87	9,21	33,22	9,49	34,04	9,59	33,95	9,58	34,78	9,68
	45	50	16,14	8,20	17,58	8,41	19,83	8,73	24,29	9,34	29,75	10,11	31,94	10,44	32,70	10,55	32,61	10,54	33,38	10,66
	50	55	15,87	8,90	17,24	9,14	19,38	9,50	23,55	10,21	28,62	11,11	30,63	11,48	31,33	11,61	31,25	11,60	31,96	11,73
	55	60	15,59	9,65	16,91	9,92	18,93	10,33	22,83	11,15	27,48	12,19	29,31	12,62	29,93	12,77	29,86	12,75	30,50	12,90
MCP T22	25	30	17,15	5,77	18,88	5,89	21,69	6,07	27,50	6,45	34,78	6,92	37,69	7,11	38,70	7,17	38,58	7,16	39,60	7,23
	30	35	16,84	6,25	18,49	6,38	21,18	6,60	26,72	7,01	33,63	7,52	36,40	7,73	37,36	7,80	37,25	7,79	38,22	7,86
	35	40	16,58	6,78	18,15	6,94	20,71	7,18	25,96	7,64	32,51	8,21	35,15	8,44	36,06	8,53	35,96	8,52	36,89	8,60
	40	45	16,38	7,37	17,87	7,55	20,27	7,82	25,21	8,34	31,41	8,98	33,94	9,25	34,82	9,35	34,72	9,34	35,62	9,44
	45	50	16,23	8,00	17,63	8,22	19,88	8,53	24,48	9,11	30,33	9,83	32,76	10,16	33,62	10,28	33,52	10,26	34,40	10,39
	50	55	16,13	8,70	17,44	8,94	19,52	9,29	23,77	9,93	29,28	10,77	31,63	11,16	32,47	11,31	32,37	11,29	33,24	11,44
	55	60	16,08	9,44	17,30	9,73	19,20	10,12	23,08	10,83	28,25	11,79	30,53	12,25	31,36	12,43	31,27	12,41	32,13	12,60
MCP T24M	25	30	20,69	7,02	22,74	7,16	26,02	7,35	32,71	7,73	41,09	8,31	44,51	8,60	45,70	8,71	45,56	8,69	46,77	8,81
	30	35	20,28	7,57	22,25	7,73	25,39	7,95	31,77	8,37	39,78	9,00	43,03	9,30	44,16	9,40	44,03	9,39	45,18	9,50
	35	40	19,89	8,15	21,80	8,34	24,81	8,61	30,92	9,13	38,53	9,81	41,59	10,09	42,64	10,18	42,52	10,17	43,59	10,27
	40	45	19,54	8,75	21,38	9,00	24,30	9,35	30,16	9,99	37,35	10,72	40,18	10,97	41,14	11,04	41,04	11,04	42,01	11,11
	45	50	19,22	9,39	21,00	9,70	23,83	10,15	29,48	10,96	36,24	11,74	38,81	11,94	39,67	11,99	39,57	11,98	40,43	12,02
	50	55	18,93	10,05	20,66	10,45	23,42	11,03	28,89	12,04	35,19	12,87	37,47	13,00	38,21	13,01	38,13	13,01	38,86	13,01
	55	60	18,66	10,75	20,36	11,23	23,07	11,97	28,38	13,23	34,20	14,11	36,16	14,15	36,78	14,12	36,71	14,13	37,30	14,07
MCP T24	25	30	20,46	6,72	22,54	6,88	25,92	7,13	32,84	7,64	41,39	8,29	44,80	8,56	45,98	8,65	45,85	8,64	47,04	8,74
	30	35	20,14	7,29	22,15	7,48	25,40	7,76	32,01	8,29	40,16	8,94	43,42	9,21	44,54	9,31	44,42	9,30	45,56	9,39
	35	40	19,84	7,91	21,78	8,13	24,89	8,44	31,19	9,01	38,95	9,69	42,07	9,98	43,15	10,08	43,03	10,07	44,13	10,17
	40	45	19,56	8,58	21,42	8,82	24,39	9,16	30,37	9,79	37,76	10,54	40,76	10,86	41,80	10,97	41,68	10,96	42,74	11,08
	45	50	19,30	9,28	21,08	9,55	23,90	9,94	29,56	10,64	36,61	11,49	39,48	11,85	40,49	11,99	40,37	11,97	41,40	12,11
	50	55	19,07	10,03	20,76	10,33	23,42	10,77	28,76	11,55	35,47	12,53	38,25	12,96	39,22	13,12	39,11	13,10	40,11	13,27
	55	60	18,85	10,82	20,45	11,15	22,95	11,64	27,97	12,53	34,36	13,67	37,05	14,18	38,00	14,37	37,89	14,35	38,86	14,55
MCP T30	25	30	25,81	7,84	28,29	7,99	32,27	8,24	40,31	8,83	50,11	9,67	53,98	10,04	55,31	10,17	55,16	10,15	56,51	10,28
	30	35	25,25	8,48	27,66	8,65	31,53	8,94	39,33	9,59	48,81	10,48	52,55	10,86	53,83	10,99	53,69	10,98	54,99	11,12
	35	40	24,74	9,21	27,09	9,42	30,84	9,76	38,39	10,49	47,55	11,45	51,17	11,86	52,42	12,00	52,28	11,98	53,54	12,13
	40	45	24,29	10,04	26,57	10,30	30,21	10,71	37,49	11,53	46,33	12,58	49,84	13,03	51,06	13,19	50,92	13,17	52,16	13,33
	45	50	23,90	10,97	26,12	11,29	29,63	11,78	36,63	12,72	45,15	13,88	48,58	14,37	49,77	14,55	49,63	14,53	50,85	14,71
	50	55	23,56	11,99	25,72	12,39	29,11	12,98	35,80	14,05	44,02	15,34	47,36	15,90	48,54	16,10	48,41	16,07	49,60	16,28
	55	60	23,28	13,11	25,38	13,61	28,63	14,31	35,02	15,53	42,92	16,97	46,21	17,59	47,37	17,82	47,24	17,79	48,43	18,03

All copying, even partial, of this manual is strictly forbidden

5 PERFORMANCE

5.3 MCP TOTAL RECOVERY CAPACITIES

Tw Rec Water temperature DHW side
Tw in Cooling water inlet temperature
Tw out Cooling water outlet temperature

Tw Raff Water temperature system side
PT Heating capacity DHW side
PF Cooling capacity
PA Total power input

MCP	Tw Raff		Tw Rec: 30/35 °C			Tw Rec: 35/40 °C			Tw Rec: 40/45 °C			Tw Rec: 45/50 °C			Tw Rec: 50/55 °C		
	Tw in	Tw out	PT	PF	PA	PT	PF	PA	PT	PF	PA	PT	PF	PA	PT	PF	PA
MCP 007M	10	5	9,50	7,62	2,24	9,20	7,15	2,42	8,92	6,67	2,63	8,65	6,19	2,85	8,41	5,70	3,11
	11	6	9,81	7,91	2,26	9,49	7,42	2,44	9,19	6,93	2,64	8,91	6,43	2,87	8,65	5,93	3,13
	12	7	10,13	8,21	2,27	9,79	7,71	2,45	**9,48**	**7,20**	**2,66**	9,19	6,69	2,89	8,91	6,17	3,15
	13	8	10,45	8,53	2,29	10,10	8,01	2,47	9,78	7,48	2,68	9,47	6,95	2,91	9,18	6,41	3,17
	14	9	10,79	8,85	2,30	10,43	8,31	2,49	10,08	7,77	2,69	9,75	7,22	2,93	9,45	6,66	3,19
	15	10	11,14	9,18	2,32	10,76	8,63	2,50	10,39	8,06	2,71	10,05	7,49	2,95	9,73	6,92	3,21
	16	11	11,50	9,53	2,34	11,10	8,95	2,52	10,72	8,37	2,73	10,36	7,78	2,97	10,01	7,19	3,23
	23	18	12,48	10,47	2,38	12,03	9,84	2,57	11,60	9,21	2,78	11,19	8,57	3,02	10,79	7,92	3,29
MCP 007	10	5	9,57	7,69	2,24	9,28	7,23	2,42	9,01	6,76	2,63	8,76	6,30	2,85	8,54	5,84	3,11
	11	6	9,89	7,99	2,26	9,58	7,51	2,44	9,29	7,03	2,64	9,03	6,55	2,87	8,80	6,07	3,13
	12	7	10,21	8,30	2,27	9,88	7,80	2,45	**9,58**	**7,30**	**2,66**	9,30	6,80	2,89	9,05	6,31	3,15
	13	8	10,55	8,62	2,29	10,20	8,10	2,47	9,88	7,58	2,68	9,58	7,06	2,91	9,31	6,55	3,17
	14	9	10,89	8,95	2,30	10,53	8,41	2,49	10,18	7,87	2,69	9,87	7,33	2,93	9,58	6,80	3,19
	15	10	11,25	9,29	2,32	10,86	8,73	2,50	10,50	8,17	2,71	10,16	7,61	2,95	9,85	7,05	3,21
	16	11	11,62	9,64	2,34	11,21	9,06	2,52	10,82	8,48	2,73	10,47	7,89	2,97	10,13	7,31	3,23
	23	18	12,62	10,60	2,38	12,15	9,96	2,57	11,71	9,32	2,78	11,28	8,66	3,02	10,88	8,00	3,29
MCP 009M	10	5	11,87	9,47	2,81	11,53	8,88	3,06	11,18	8,27	3,35	10,85	7,63	3,67	10,52	6,96	4,03
	11	6	12,26	9,84	2,83	11,89	9,23	3,08	11,53	8,59	3,37	11,17	7,93	3,70	10,82	7,23	4,06
	12	7	12,66	10,22	2,85	12,27	9,59	3,10	**11,95**	**9,00**	**3,38**	11,50	8,23	3,72	11,13	7,51	4,09
	13	8	13,07	10,61	2,87	12,66	9,96	3,12	12,25	9,27	3,42	11,85	8,55	3,75	11,45	7,80	4,12
	14	9	13,49	11,01	2,89	13,06	10,34	3,15	12,63	9,62	3,44	12,20	8,88	3,78	11,78	8,09	4,16
	15	10	13,92	11,43	2,91	13,47	10,73	3,17	13,02	9,99	3,47	12,57	9,21	3,81	12,12	8,40	4,20
	16	11	14,37	11,85	2,93	13,89	11,13	3,19	13,42	10,36	3,50	12,95	9,56	3,84	12,47	8,72	4,24
	23	18	15,68	13,10	3,00	15,15	12,31	3,26	14,61	11,47	3,58	14,07	10,59	3,94	13,53	9,66	4,36
MCP 009	10	5	11,94	9,64	2,70	11,59	9,05	2,95	11,24	8,43	3,23	10,89	7,80	3,53	10,55	7,14	3,87
	11	6	12,33	10,01	2,72	11,96	9,40	2,97	11,59	8,76	3,25	11,22	8,10	3,56	10,86	7,42	3,90
	12	7	12,73	10,39	2,74	12,34	9,76	3,00	**11,95**	**9,10**	**3,28**	11,57	8,42	3,60	11,19	7,72	3,94
	13	8	13,14	10,78	2,77	12,73	10,12	3,02	12,32	9,45	3,31	11,92	8,74	3,62	11,52	8,02	3,97
	14	9	13,56	11,17	2,79	13,13	10,50	3,05	12,70	9,80	3,34	12,28	9,08	3,66	11,87	8,32	4,01
	15	10	13,99	11,58	2,81	13,54	10,89	3,07	13,10	10,17	3,36	12,66	9,42	3,69	12,22	8,64	4,05
	16	11	14,43	12,00	2,84	13,96	11,28	3,10	13,50	10,54	3,39	13,04	9,77	3,73	12,58	8,96	4,09
	23	18	15,73	13,23	2,91	15,20	12,45	3,18	14,68	11,63	3,48	14,16	10,79	3,83	13,66	9,92	4,22
MCP 010M	10	5	14,03	11,28	3,19	13,62	10,57	3,50	13,21	9,83	3,85	12,80	9,07	4,23	12,41	8,27	4,66
	11	6	14,47	11,71	3,21	14,04	10,98	3,52	13,61	10,21	3,88	13,18	9,42	4,26	12,76	8,59	4,69
	12	7	14,93	12,15	3,23	14,47	11,39	3,55	**14,02**	**10,60**	**3,90**	13,57	9,78	4,29	13,12	8,92	4,73
	13	8	15,40	12,60	3,25	14,92	11,82	3,57	14,44	11,00	3,93	13,97	10,15	4,32	13,50	9,26	4,76
	14	9	15,88	13,06	3,27	15,38	12,26	3,59	14,88	11,41	3,95	14,38	10,53	4,35	13,88	9,60	4,80
	15	10	16,38	13,54	3,29	15,85	12,71	3,61	15,33	11,84	3,98	14,80	10,92	4,39	14,28	9,96	4,84
	16	11	16,88	14,03	3,30	16,34	13,17	3,63	15,79	12,27	4,00	15,24	11,33	4,42	14,68	10,34	4,88
	23	18	18,16	15,26	3,35	17,56	14,34	3,68	16,95	13,37	4,07	16,33	12,35	4,49	15,71	11,27	4,97
MCP 010	10	5	14,09	11,41	3,11	13,67	10,72	3,41	13,27	9,99	3,75	12,88	9,25	4,12	12,49	8,48	4,52
	11	6	14,55	11,86	3,13	14,12	11,14	3,44	13,69	10,39	3,78	13,27	9,62	4,15	12,86	8,82	4,55
	12	7	15,03	12,32	3,15	14,58	11,57	3,46	**14,13**	**10,80**	**3,80**	13,68	10,00	4,18	13,25	9,17	4,59
	13	8	15,53	12,80	3,18	15,05	12,02	3,48	14,57	11,22	3,83	14,10	10,39	4,20	13,64	9,54	4,62
	14	9	16,04	13,28	3,20	15,53	12,48	3,50	15,03	11,66	3,85	14,54	10,80	4,23	14,05	9,92	4,65
	15	10	16,56	13,79	3,22	16,02	12,96	3,53	15,50	12,10	3,88	14,98	11,22	4,26	14,48	10,31	4,69
	16	11	17,09	14,30	3,24	16,53	13,44	3,55	15,98	12,56	3,90	15,44	11,65	4,29	14,92	10,71	4,73
	23	18	18,43	15,59	3,29	17,81	14,67	3,61	17,20	13,72	3,96	16,61	12,74	4,37	16,04	11,74	4,82
MCP 013M	10	5	16,90	13,54	3,99	16,43	12,71	4,36	15,99	11,87	4,79	15,60	11,03	5,27	15,26	10,17	5,81
	11	6	17,44	14,05	4,02	16,94	13,20	4,39	16,48	12,33	4,82	16,07	11,46	5,30	15,70	10,57	5,85
	12	7	17,99	14,58	4,05	17,47	13,70	4,42	**16,98**	**12,80**	**4,85**	16,54	11,89	5,34	16,14	10,97	5,89
	13	8	18,56	15,12	4,08	18,01	14,21	4,45	17,49	13,28	4,88	17,02	12,35	5,37	16,59	11,39	5,92
	14	9	19,15	15,67	4,11	18,57	14,73	4,48	18,02	13,78	4,91	17,51	12,81	5,40	17,05	11,82	5,95
	15	10	19,75	16,25	4,14	19,14	15,28	4,52	18,56	14,29	4,95	18,02	13,28	5,43	17,51	12,26	5,98
	16	11	20,37	16,83	4,18	19,73	15,83	4,55	19,11	14,81	4,98	18,53	13,77	5,46	17,98	12,71	6,00
	23	18	22,21	18,55	4,29	21,46	17,47	4,66	20,74	16,35	5,07	20,03	15,21	5,53	19,33	14,04	6,03

All copying, even partial, of this manual is strictly forbidden

5 PERFORMANCE

5.3 MCP TOTAL RECOVERY CAPACITIES

Tw Rec Water temperature DHW side
Tw in Cooling water inlet temperature
Tw out Cooling water outlet temperature

Tw Raff Water temperature system side
PT Heating capacity DHW side
PF Cooling capacity
PA Total power input

MCP	Tw Raff		Tw Rec: 30/35 °C			Tw Rec: 35/40 °C			Tw Rec: 40/45 °C			Tw Rec: 45/50 °C			Tw Rec: 50/55 °C		
	Tw in	Tw out	PT	PF	PA	PT	PF	PA	PT	PF	PA	PT	PF	PA	PT	PF	PA
MCP 013	**10**	**5**	16,90	13,65	3,87	16,44	12,87	4,21	15,98	12,06	4,58	15,53	11,21	5,00	15,09	10,34	5,44
	11	**6**	17,45	14,17	3,90	16,96	13,36	4,24	16,48	12,52	4,62	16,01	11,65	5,03	15,53	10,75	5,48
	12	**7**	18,01	14,70	3,93	17,50	13,87	4,27	**16,99**	**13,00**	**4,65**	16,49	12,10	5,07	16,00	11,18	5,53
	13	**8**	18,58	15,25	3,96	18,05	14,39	4,30	17,51	13,49	4,68	16,99	12,57	5,11	16,47	11,61	5,57
	14	**9**	19,17	15,81	3,99	18,61	14,92	4,33	18,05	14,00	4,72	17,50	13,04	5,14	16,96	12,06	5,61
	15	**10**	19,78	16,38	4,03	19,19	15,47	4,37	18,60	14,52	4,75	18,03	13,54	5,18	17,47	12,52	5,66
	16	**11**	20,40	16,97	4,06	19,78	16,03	4,40	19,17	15,05	4,79	18,57	14,04	5,22	17,99	13,00	5,70
	23	**18**	22,28	18,76	4,16	21,58	17,74	4,50	20,90	16,68	4,89	20,23	15,59	5,34	19,59	14,46	5,85
MCP 015	**10**	**5**	19,92	16,13	4,47	19,45	15,25	4,89	18,99	14,33	5,39	18,55	13,35	5,96	18,14	12,33	6,60
	11	**6**	20,54	16,71	4,51	20,04	15,81	4,94	19,56	14,86	5,43	19,11	13,86	6,01	18,67	12,80	6,65
	12	**7**	21,17	17,30	4,55	20,65	16,38	4,98	**20,15**	**15,40**	**5,48**	19,67	14,37	6,06	19,21	13,29	6,71
	13	**8**	21,81	17,90	4,59	21,27	16,95	5,02	20,75	15,96	5,53	20,25	14,90	6,11	19,77	13,80	6,76
	14	**9**	22,47	18,52	4,64	21,91	17,55	5,07	21,36	16,52	5,57	20,84	15,44	6,16	20,34	14,31	6,82
	15	**10**	23,14	19,14	4,68	22,55	18,15	5,11	21,99	17,10	5,62	21,45	16,00	6,21	20,92	14,84	6,88
	16	**11**	23,82	19,79	4,73	23,22	18,77	5,16	22,63	17,70	5,67	22,07	16,57	6,27	21,52	15,39	6,94
	23	**18**	25,68	21,52	4,86	25,01	20,44	5,29	24,37	19,30	5,81	23,75	18,11	6,41	23,16	16,87	7,10
MCP 018	**10**	**5**	24,85	19,40	6,32	24,07	18,25	6,71	23,30	17,08	7,12	22,53	15,90	7,56	21,77	14,69	8,04
	11	**6**	25,64	20,12	6,39	24,83	18,94	6,78	24,02	17,73	7,20	23,22	16,51	7,65	22,42	15,26	8,12
	12	**7**	26,45	20,86	6,46	25,61	19,64	6,86	**24,76**	**18,40**	**7,28**	23,93	17,13	7,73	23,09	15,84	8,21
	13	**8**	27,29	21,63	6,54	26,41	20,37	6,94	25,53	19,08	7,36	24,66	17,78	7,82	23,78	16,44	8,31
	14	**9**	28,15	22,41	6,62	27,23	21,11	7,02	26,32	19,79	7,45	25,41	18,44	7,92	24,50	17,06	8,42
	15	**10**	29,03	23,21	6,70	28,07	21,87	7,11	27,13	20,51	7,55	26,18	19,11	8,02	25,24	17,69	8,53
	16	**11**	29,93	24,04	6,78	28,94	22,66	7,20	27,96	21,25	7,65	26,98	19,80	8,14	26,01	18,33	8,67
	23	**18**	33,28	27,09	7,09	32,17	25,55	7,54	31,08	23,98	8,05	30,00	22,37	8,62	28,95	20,72	9,24
MCP 027	**10**	**5**	35,74	28,56	8,21	34,62	26,89	8,79	33,52	25,18	9,44	32,44	23,42	10,16	31,39	21,62	10,95
	11	**6**	36,91	29,64	8,32	35,73	27,90	8,89	34,57	26,13	9,55	33,44	24,30	10,27	32,33	22,43	11,08
	12	**7**	38,11	30,74	8,42	36,87	28,94	9,00	**35,65**	**27,10**	**9,66**	34,46	25,21	10,40	33,30	23,28	11,21
	13	**8**	39,34	31,87	8,53	38,04	30,01	9,11	36,76	28,10	9,78	35,52	26,15	10,52	34,30	24,15	11,35
	14	**9**	40,60	33,03	8,64	39,24	31,10	9,22	37,91	29,13	9,90	36,61	27,11	10,66	35,34	25,05	11,50
	15	**10**	41,90	34,21	8,75	40,47	32,22	9,34	39,08	30,19	10,02	37,73	28,11	10,79	36,42	25,98	11,65
	16	**11**	43,23	35,43	8,87	41,74	33,38	9,46	40,29	31,28	10,15	38,89	29,13	10,94	37,54	26,94	11,82
	23	**18**	47,41	39,26	9,24	45,74	37,01	9,86	44,14	34,72	10,58	42,61	32,39	11,42	41,15	30,03	12,37
MCP 032	**10**	**5**	43,48	34,66	10,16	42,20	32,66	10,92	40,91	30,60	11,74	39,63	28,47	12,63	38,35	26,29	13,58
	11	**6**	44,83	35,92	10,26	43,50	33,86	11,03	42,16	31,73	11,86	40,83	29,55	12,76	39,50	27,29	13,73
	12	**7**	46,22	37,21	10,36	44,83	35,09	11,14	**43,45**	**32,90**	**11,98**	42,06	30,65	12,89	40,68	28,33	13,88
	13	**8**	47,65	38,54	10,47	46,20	36,35	11,25	44,76	34,10	12,10	43,32	31,78	13,03	41,88	29,39	14,02
	14	**9**	49,12	39,91	10,58	47,61	37,65	11,36	46,11	35,33	12,22	44,60	32,94	13,16	43,10	30,48	14,16
	15	**10**	50,62	41,31	10,69	49,05	38,99	11,48	47,49	36,59	12,34	45,92	34,13	13,29	44,35	31,60	14,30
	16	**11**	52,17	42,75	10,80	50,53	40,36	11,59	48,90	37,89	12,47	47,26	35,36	13,41	45,63	32,75	14,43
	23	**18**	57,89	48,07	11,21	56,01	45,43	12,02	54,12	42,71	12,89	52,21	39,90	13,84	50,29	37,01	14,86
MCP 040	**10**	**5**	52,30	41,45	12,32	50,78	39,07	13,22	49,37	36,65	14,29	48,07	34,18	15,52	46,89	31,67	16,92
	11	**6**	53,96	42,96	12,47	52,36	40,51	13,37	50,87	38,01	14,44	49,50	35,46	15,68	48,24	32,87	17,09
	12	**7**	55,66	44,52	12,63	53,98	41,98	13,53	**52,41**	**39,40**	**14,60**	50,96	36,77	15,84	49,63	34,09	17,25
	13	**8**	57,41	46,11	12,79	55,65	43,50	13,69	54,00	40,83	14,76	52,47	38,12	16,00	51,05	35,35	17,42
	14	**9**	59,20	47,75	12,96	57,36	45,05	13,85	55,63	42,30	14,92	54,01	39,50	16,17	52,50	36,64	17,59
	15	**10**	61,05	49,43	13,13	59,11	46,65	14,02	57,29	43,81	15,09	55,59	40,92	16,34	53,99	37,97	17,76
	16	**11**	62,94	51,15	13,30	60,92	48,29	14,19	59,01	45,36	15,26	57,20	42,38	16,51	55,51	39,33	17,93
	23	**18**	69,97	57,55	13,97	67,61	54,37	14,84	65,34	51,10	15,89	63,17	47,76	17,12	61,09	44,33	18,54
MCP T18M	**10**	**5**	23,45	18,52	5,78	22,77	17,35	6,29	22,11	16,12	6,88	21,45	14,84	7,54	20,81	13,51	8,27
	11	**6**	24,21	19,24	5,81	23,49	18,03	6,34	22,78	16,75	6,93	22,08	15,42	7,60	21,39	14,03	8,34
	12	**7**	25,00	19,99	5,85	24,23	18,73	6,38	**23,48**	**17,40**	**6,98**	22,73	16,01	7,66	22,00	14,56	8,41
	13	**8**	25,80	20,75	5,89	25,00	19,45	6,42	24,20	18,07	7,03	23,41	16,63	7,72	22,62	15,12	8,48
	14	**9**	26,63	21,54	5,94	25,78	20,19	6,47	24,94	18,76	7,08	24,10	17,26	7,78	23,26	15,69	8,55
	15	**10**	27,49	22,36	5,98	26,59	20,95	6,52	25,70	19,47	7,14	24,81	17,91	7,84	23,93	16,28	8,63
	16	**11**	28,36	23,19	6,02	27,42	21,73	6,57	26,49	20,20	7,20	25,55	18,58	7,91	24,62	16,89	8,72
	23	**18**	31,62	26,29	6,20	30,52	24,65	6,76	29,42	22,92	7,42	28,32	21,10	8,19	27,22	19,18	9,04

All copying, even partial, of this manual is strictly forbidden

5 PERFORMANCE

5.3 MCP TOTAL RECOVERY CAPACITIES

Tw Rec Water temperature DHW side
Tw in Cooling water inlet temperature
Tw out Cooling water outlet temperature
Tw Raff Water temperature system side
PT Heating capacity DHW side
PF Cooling capacity
PA Total power input

MCP	Tw Raff		Tw Rec: 30/35 °C			Tw Rec: 35/40 °C			Tw Rec: 40/45 °C			Tw Rec: 45/50 °C			Tw Rec: 50/55 °C		
	Tw in	Tw out	PT	PF	PA	PT	PF	PA	PT	PF	PA	PT	PF	PA	PT	PF	PA
MCP T18	**10**	**5**	23,46	18,71	5,58	22,77	17,53	6,10	22,10	16,31	6,67	21,43	15,05	7,30	20,78	13,74	7,99
	11	**6**	24,22	19,43	5,63	23,50	18,21	6,14	22,78	16,95	6,72	22,08	15,64	7,36	21,39	14,29	8,06
	12	**7**	25,00	20,16	5,67	24,24	18,90	6,19	**23,49**	**17,60**	**6,78**	22,75	16,25	7,43	22,03	14,85	8,13
	13	**8**	25,79	20,91	5,72	25,00	19,62	6,25	24,21	18,27	6,84	23,44	16,87	7,49	22,68	15,43	8,21
	14	**9**	26,61	21,68	5,77	25,78	20,35	6,30	24,96	18,96	6,90	24,15	17,52	7,56	23,35	16,02	8,29
	15	**10**	27,45	22,48	5,81	26,58	21,10	6,35	25,72	19,66	6,96	24,87	18,17	7,63	24,03	16,63	8,37
	16	**11**	28,31	23,29	5,87	27,40	21,87	6,41	26,51	20,39	7,02	25,62	18,85	7,71	24,74	17,26	8,46
	23	**18**	31,31	26,12	6,05	30,27	24,54	6,61	29,24	22,90	7,25	28,22	21,19	7,98	27,22	19,43	8,78
MCP T22M	**10**	**5**	27,24	21,60	6,55	26,45	20,20	7,19	25,67	18,74	7,90	24,90	17,23	8,68	24,14	15,65	9,54
	11	**6**	28,10	22,42	6,59	27,27	20,97	7,23	26,44	19,46	7,95	25,62	17,89	8,75	24,81	16,25	9,62
	12	**7**	28,99	23,26	6,63	28,10	21,76	7,28	**27,23**	**20,20**	**8,01**	26,37	18,57	8,82	25,51	16,87	9,70
	13	**8**	29,89	24,13	6,67	28,96	22,58	7,33	28,04	20,96	8,07	27,13	19,27	8,88	26,22	17,51	9,78
	14	**9**	30,82	25,02	6,72	29,85	23,42	7,38	28,88	21,74	8,12	27,92	19,99	8,95	26,96	18,17	9,86
	15	**10**	31,77	25,93	6,76	30,76	24,28	7,43	29,74	22,55	8,18	28,72	20,73	9,02	27,71	18,84	9,94
	16	**11**	32,75	26,87	6,80	31,69	25,17	7,48	30,62	23,37	8,24	29,55	21,50	9,09	28,49	19,54	10,03
	23	**18**	35,95	29,94	6,93	34,74	28,07	7,63	33,52	26,10	8,43	32,28	24,01	9,31	31,03	21,83	10,29
MCP T22	**10**	**5**	27,20	21,86	6,23	26,40	20,49	6,83	25,61	19,06	7,50	24,84	17,60	8,24	24,09	16,08	9,04
	11	**6**	28,10	22,72	6,27	27,25	21,30	6,88	26,42	19,82	7,56	25,60	18,30	8,30	24,79	16,72	9,11
	12	**7**	29,03	23,61	6,32	28,13	22,13	6,93	**27,25**	**20,60**	**7,61**	26,38	19,02	8,36	25,53	17,39	9,17
	13	**8**	29,98	24,52	6,36	29,04	22,99	6,98	28,10	21,40	7,66	27,19	19,77	8,42	26,28	18,08	9,24
	14	**9**	30,96	25,45	6,40	29,96	23,87	7,03	28,98	22,23	7,72	28,02	20,54	8,48	27,06	18,79	9,32
	15	**10**	31,96	26,41	6,45	30,92	24,77	7,07	29,89	23,08	7,77	28,87	21,33	8,55	27,87	19,53	9,39
	16	**11**	32,99	27,40	6,49	31,89	25,71	7,12	30,82	23,96	7,83	29,76	22,15	8,61	28,71	20,29	9,47
	23	**18**	36,35	30,62	6,64	35,09	28,76	7,28	33,87	26,84	8,01	32,67	24,87	8,83	31,51	22,84	9,73
MCP T24M	**10**	**5**	33,61	26,88	7,73	32,66	25,23	8,47	31,80	23,56	9,32	31,03	21,88	10,28	30,34	20,17	11,36
	11	**6**	34,67	27,90	7,78	33,68	26,19	8,53	32,77	24,47	9,38	31,94	22,72	10,36	31,21	20,95	11,45
	12	**7**	35,77	28,94	7,84	34,72	27,18	8,59	**33,76**	**25,40**	**9,45**	32,88	23,59	10,43	32,09	21,76	11,52
	13	**8**	36,90	30,02	7,90	35,80	28,20	8,65	34,78	26,36	9,52	33,84	24,48	10,50	32,98	22,59	11,59
	14	**9**	38,07	31,12	7,96	36,91	29,24	8,72	35,82	27,34	9,58	34,82	25,40	10,56	33,89	23,43	11,66
	15	**10**	39,27	32,25	8,03	38,04	30,32	8,78	36,89	28,35	9,65	35,82	26,34	10,62	34,81	24,31	11,71
	16	**11**	40,50	33,41	8,10	39,21	31,42	8,85	37,99	29,38	9,71	36,83	27,31	10,68	35,74	25,20	11,75
	23	**18**	44,13	36,83	8,34	42,65	34,66	9,07	41,21	32,43	9,89	39,79	30,15	10,80	38,41	27,81	11,80
MCP T24	**10**	**5**	33,76	27,11	7,65	32,86	25,55	8,35	31,97	23,93	9,12	31,09	22,25	9,96	30,21	20,51	10,87
	11	**6**	34,85	28,14	7,71	33,90	26,53	8,41	32,96	24,85	9,18	32,03	23,12	10,03	31,11	21,32	10,95
	12	**7**	35,96	29,20	7,77	34,96	27,53	8,47	**33,97**	**25,80**	**9,25**	32,99	24,01	10,11	32,03	22,15	11,04
	13	**8**	37,11	30,28	7,84	36,05	28,56	8,54	35,01	26,78	9,32	33,98	24,93	10,18	32,97	23,02	11,13
	14	**9**	38,28	31,39	7,90	37,17	29,62	8,60	36,08	27,78	9,39	35,00	25,87	10,26	33,95	23,90	11,22
	15	**10**	39,48	32,53	7,97	38,32	30,70	8,67	37,18	28,81	9,46	36,05	26,85	10,34	34,95	24,82	11,32
	16	**11**	40,72	33,70	8,04	39,50	31,81	8,74	38,30	29,86	9,53	37,13	27,85	10,42	35,99	25,76	11,42
	23	**18**	44,46	37,24	8,25	43,08	35,20	8,94	41,74	33,09	9,75	40,44	30,91	10,68	39,17	28,66	11,72
MCP T30	**10**	**5**	40,05	32,33	8,81	39,09	30,54	9,68	38,17	28,66	10,70	37,28	26,67	11,86	36,44	24,58	13,17
	11	**6**	41,28	33,48	8,90	40,28	31,65	9,77	39,31	29,72	10,79	38,39	27,68	11,97	37,50	25,53	13,28
	12	**7**	42,54	34,67	8,98	41,50	32,79	9,86	**40,49**	**30,80**	**10,89**	39,52	28,71	12,07	38,59	26,51	13,40
	13	**8**	43,83	35,87	9,07	42,74	33,95	9,95	41,69	31,91	10,99	40,68	29,77	12,18	39,70	27,51	13,52
	14	**9**	45,15	37,11	9,16	44,02	35,13	10,05	42,92	33,05	11,09	41,86	30,85	12,28	40,84	28,54	13,64
	15	**10**	46,50	38,36	9,25	45,32	36,34	10,14	44,18	34,21	11,19	43,08	31,96	12,39	42,02	29,60	13,76
	16	**11**	47,88	39,65	9,35	46,65	37,58	10,24	45,47	35,39	11,29	44,32	33,10	12,51	43,22	30,69	13,88
	23	**18**	51,74	43,25	9,63	50,39	41,05	10,52	49,09	38,73	11,59	47,83	36,30	12,83	46,63	33,76	14,23

All copying, even partial, of this manual is strictly forbidden

5 PERFORMANCE

5.4 INTEGRATED CAPACITIES

In the heat pump operation (heating mode), the actual heating capacities of units may be lower than the values shown in the table, due to defrosting cycles. To obtain the actual heating capacity, multiply the capacity values by the corrective coefficients given below.

Control	Air temperature- dry bulb (°C)			
	-5	0	5	>5
PCO 3	0,91	0,9	0,94	1

6 SOUND LEVEL

LEGEND:
Lw Sound power level by octave band, not weighted
Lw_A Total sound power level, weighted A

Model	Lw							Lw_A	
	125 Hz	250 Hz	500 Hz	1000 Hz	2000 Hz	4000 Hz	8000 Hz	Total	Low-noise version
	dB	dB	dB	dB	dB	dB	dB	dB (A)	dB (A)
MCP 007M	74,8	68,5	67,9	63,8	56,6	51,6	47,9	69,0	67,0
MCP 007	74,8	68,5	67,9	63,8	56,6	51,6	47,9	69,0	67,0
MCP 009M	78,4	72,0	71,4	67,4	60,1	55,2	51,4	72,5	70,5
MCP 009	78,4	72,0	71,4	67,4	60,1	55,2	51,4	72,5	70,5
MCP 010M	77,9	71,5	70,9	66,8	59,6	54,6	50,9	72,0	70,0
MCP 010	77,9	71,5	70,9	66,8	59,6	54,6	50,9	72,0	70,0
MCP 013M	78,4	72,0	71,4	67,4	60,1	55,2	51,4	72,5	70,5
MCP 013	78,4	72,0	71,4	67,4	60,1	55,2	51,4	72,5	70,5
MCP 015	79,0	72,6	72,0	68,0	60,7	55,7	52,0	73,1	71,1
MCP 018	85,6	79,3	78,7	74,6	67,4	62,4	58,6	79,8	77,8
MCP 027	85,6	79,3	78,7	74,6	67,4	62,4	58,6	79,8	77,8
MCP 032	85,6	79,3	78,7	74,6	67,4	62,4	58,6	79,8	77,8
MCP 040	88,3	81,9	81,3	77,2	70,0	65,0	61,3	82,4	80,4
MCP T18M	81,4	75,0	74,4	70,4	63,2	58,2	54,4	75,6	73,6
MCP T18	81,4	75,0	74,4	70,4	63,2	58,2	54,4	75,6	73,6
MCP T22M	80,9	74,5	73,9	69,9	62,6	57,6	53,9	75,0	73,0
MCP T22	80,9	74,5	73,9	69,9	62,6	57,6	53,9	75,0	73,0
MCP T24M	81,4	75,0	74,4	70,4	63,2	58,2	54,4	**75,6**	73,6
MCP T24	81,4	75,0	74,4	70,4	63,2	58,2	54,4	**75,6**	73,6
MCP T30	82,0	75,6	75,0	71,0	63,7	58,7	55,0	76,1	74,1

7 OPERATING LIMITS

The graphs below illustrate the operating limits of **MCP** (in the case of continuous operation) in relation to the outlet water temperature and outdoor air temperature.

1 For transitory periods (e.g. equipment start up) values up to 25 °C are allowed
2 Value that may be reached only for outdoor air temperatures exceeding 0°C.
3 With condensation control: outdoor air T min - 15°C

Warning!
The units are designed to work with water and air temperatures falling within the range defined by the operating limits.
Attempting to operate the units beyond these limits could cause irreparable damage to the units themselves.

All copying, even partial, of this manual is strictly forbidden

7 OPERATING LIMITS

7.1 DHW PRODUCTION OPERATING LIMITS

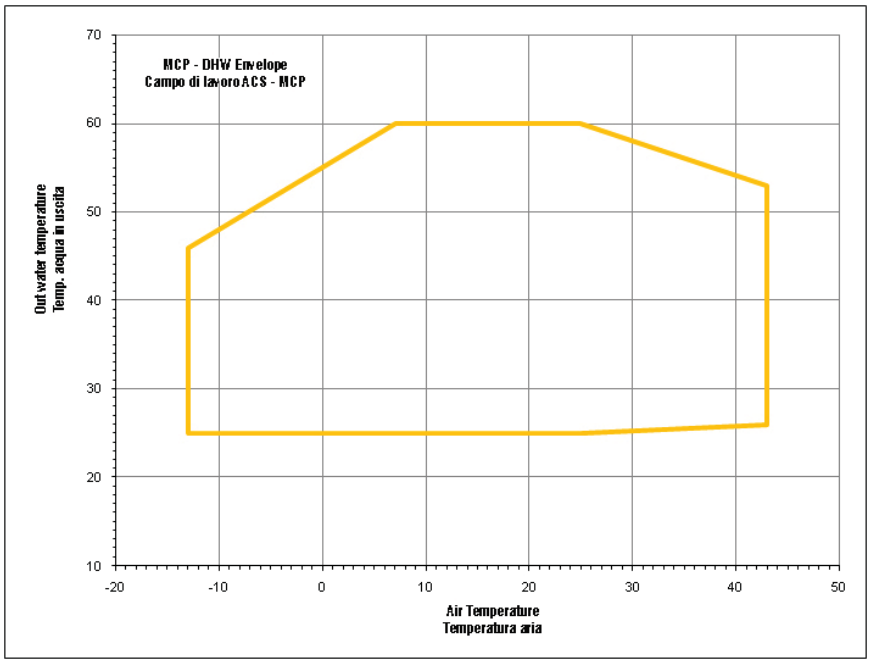

OPERATING LIMITS IN HEAT PUMP MODE

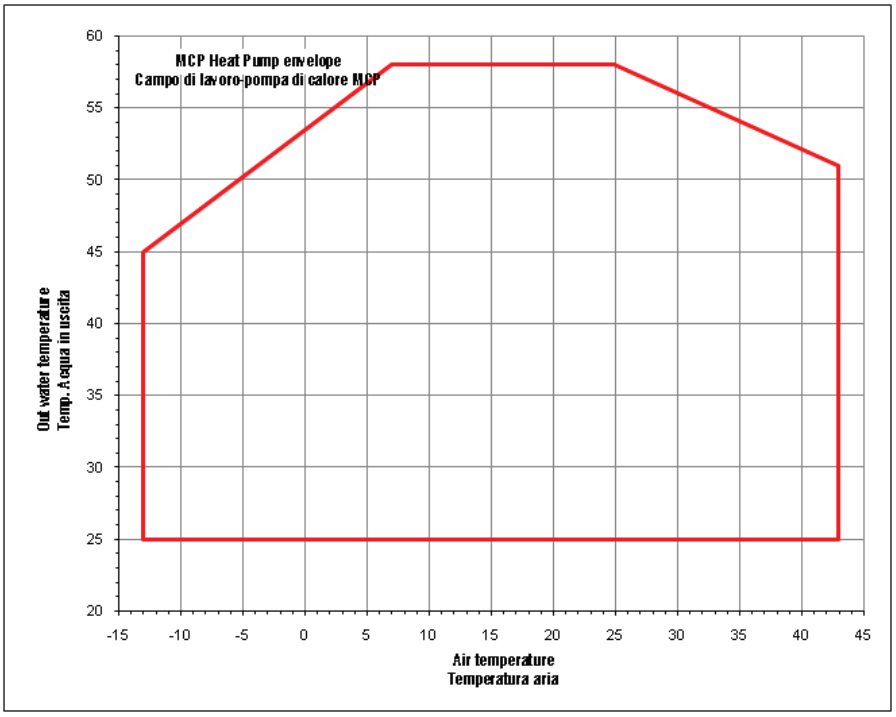

All copying, even partial, of this manual is strictly forbidden

7 OPERATING LIMITS

7.3 OPERATING LIMITS IN CHILLER MODE

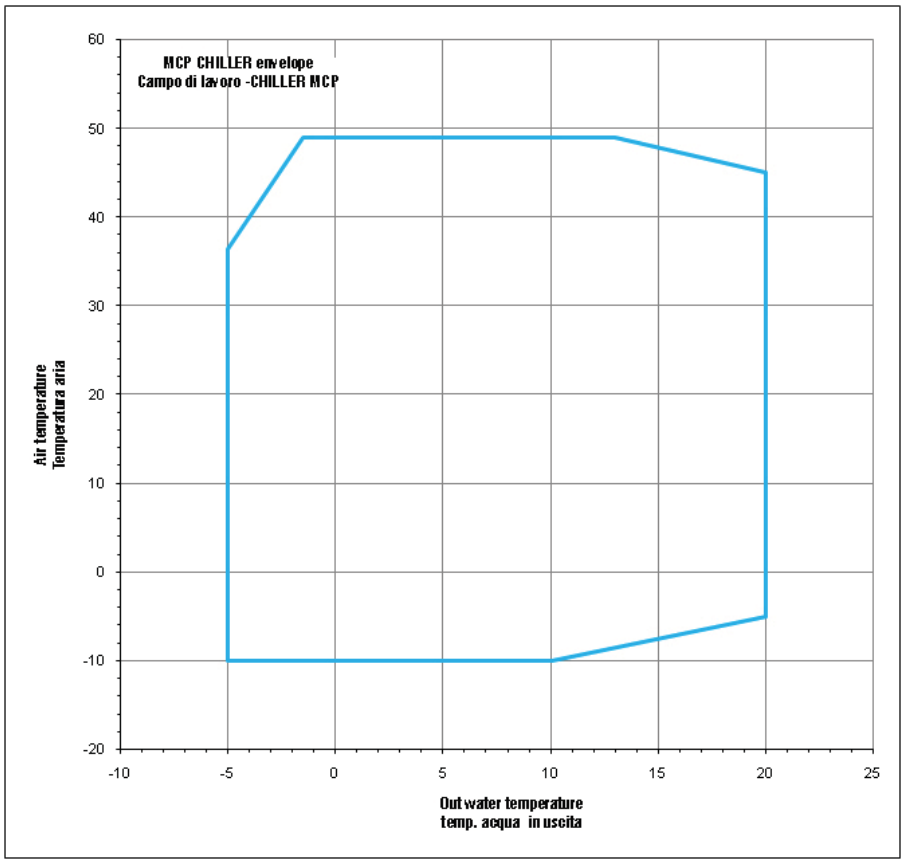

7.4 OPERATING LIMITS IN TOTAL RECOVERY CHILLER MODE

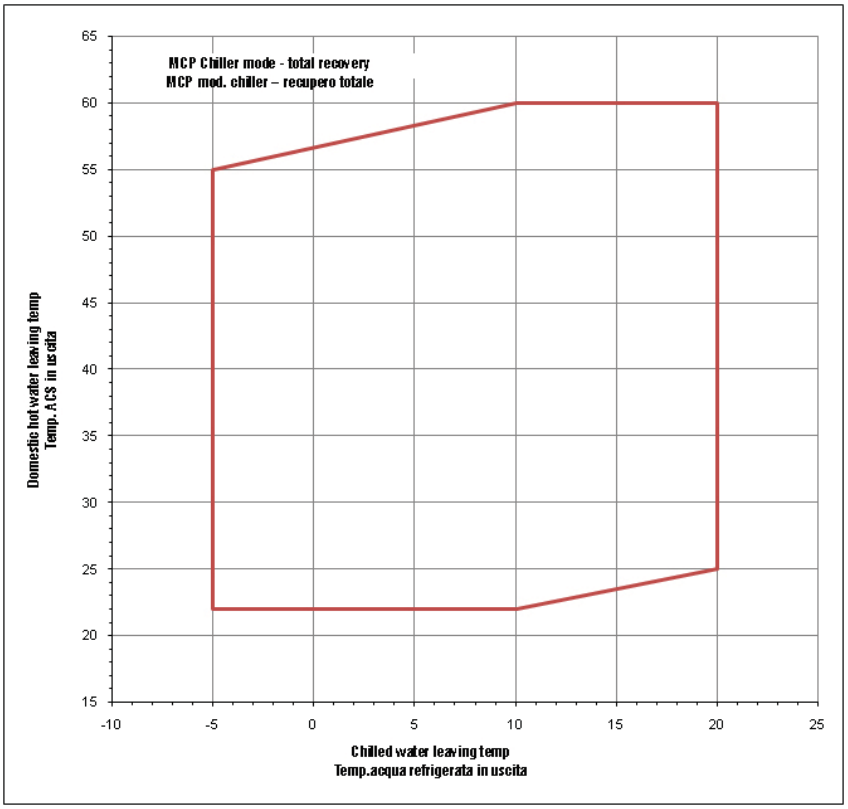

7.5 HEAT TRANSFER FLUID

The units belonging to the MCP series can work with mixtures of water and up to 30% ethylene glycol.

All copying, even partial, of this manual is strictly forbidden

8 CALCULATION FACTORS

8.1 CHANGE IN OPERATING PARAMETERS WITH ΔT OTHER THAN 5°C

After identifying the unit's performance in the terms of the desired outlet water temperature, correct the value by multiplying it by the following corrective coefficients.

ΔT_W	$C_{PF/PT}$	C_{PA}	C_{Qw}	$C_{\Delta pw1}$
3	0.975	1	1.63	2.64
4	0.99	1	1.24	1.53
5	1	1	1	1
6	1.015	1	0.85	0.72
7	1.03	1	0.74	0.54
8	1.04	1	0.65	0.42

LEGEND

ΔT_W Difference between water inlet temperature and water outlet temperature

$C_{PF/PT}$ Corrective coefficient of cooling/heating capacity

C_{PA} Correction coefficient of power absorption

C_{Qw} Correction coefficient of water flow rate

$C_{\Delta pw1}$ Correction coefficient of pressure drops

8.2 WATER AND GLYCOL MIXTURE

Based on the minimum outlet water temperature, you can derive the percentage of ethylene glycol and the corrective coefficient using the table below.

Percentage of ethylene glycol	0%	10%	20%	30%
Minimum temp. of water produced	5°C	2°C	-5°C	-10°C
Mixture freezing temp. (°C) (°C)	0°C	-4°C	-14°C	-18°C
Capacity correction factor	1.000	0.998	0.994	0.989
Water flow rate correction factor	1.000	1.047	1.094	1.140
Pressure drop correction factor	1.000	1.157	1.352	1.585

WARNING:
The use of propylene glycol is not admitted with standard pumps.
For further information, contact the manufacturer.

9 PRESSURE DROPS

The diagram shows the evaporator pressure drops (**Δp**) as a function of the water flow rate (**Qw**), assuming an average water temperature of 10°C.

9.1 WATER LOAD LOSSES, SYSTEM SIDE AND DHW SIDE

MCP 007 ÷ 018

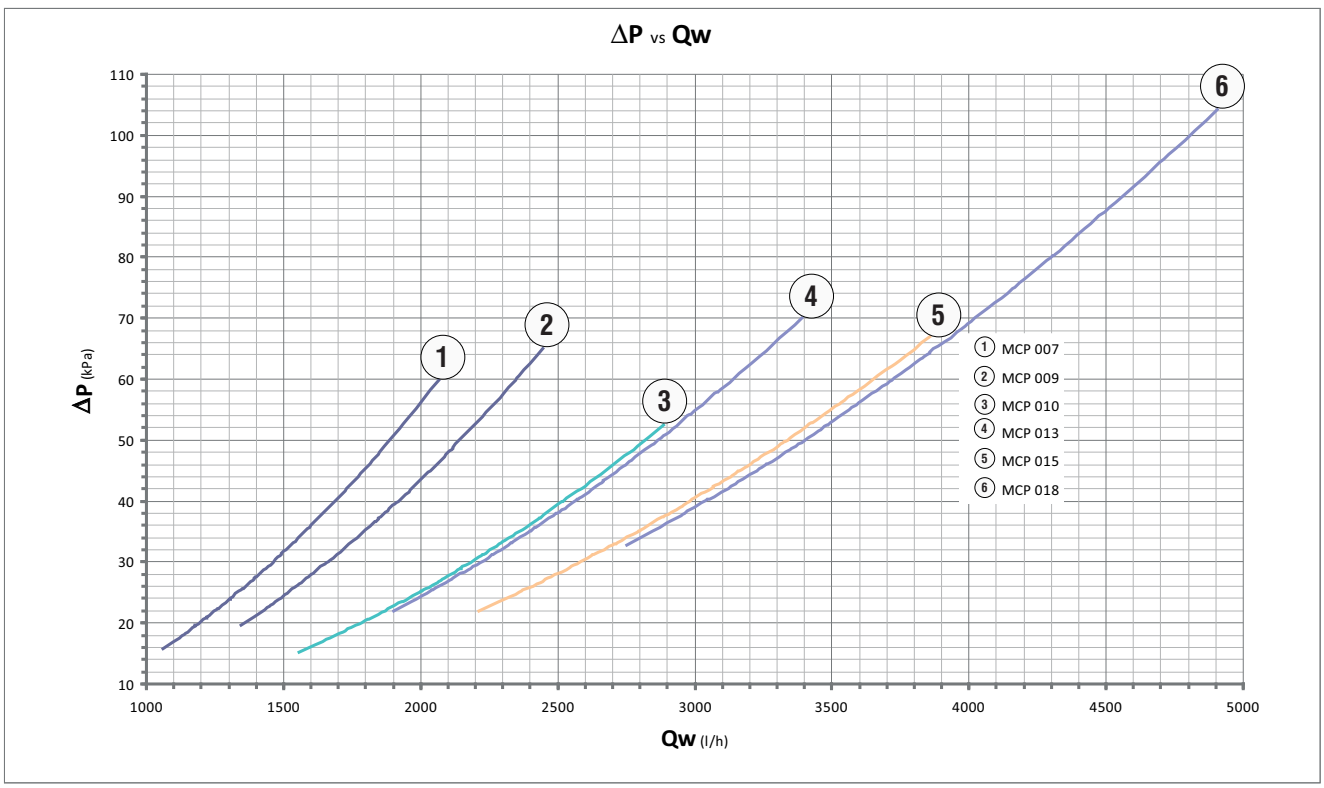

All copying, even partial, of this manual is strictly forbidden

9 PRESSURE DROPS

The diagram shows the evaporator pressure drops (Δp) as a function of the water flow rate (**Qw**), assuming an average water temperature of 10°C.

9.1 WATER LOAD LOSSES, SYSTEM SIDE AND DHW SIDE

MCP 027 ÷ T30

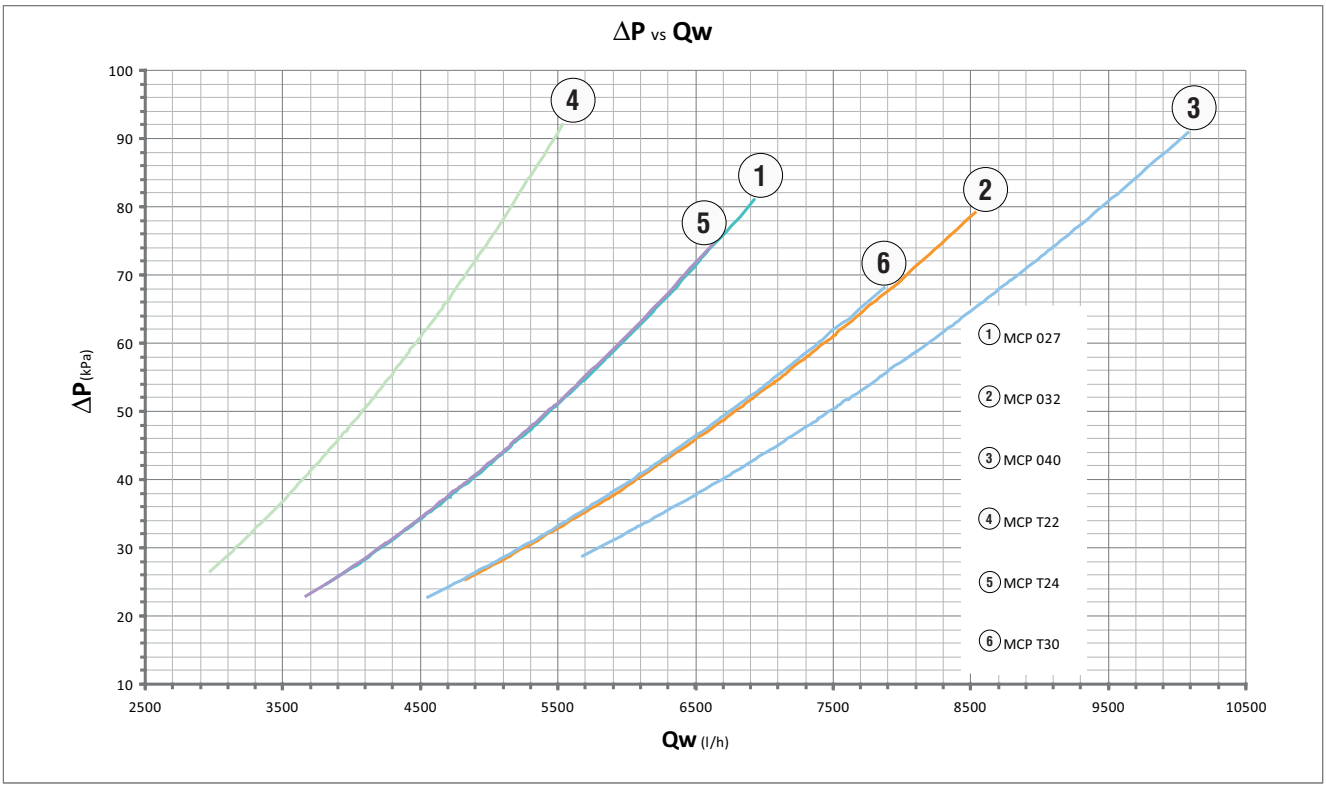

All copying, even partial, of this manual is strictly forbidden

9 PRESSURE DROPS

9.2 Y FILTER PRESSURE DROPS

The diagram shows the Y filter pressure drops (Δ**p**) as a function of the water flow rate (**Qw**), assuming an average water temperature of 10°C.

MCP 007 - 009

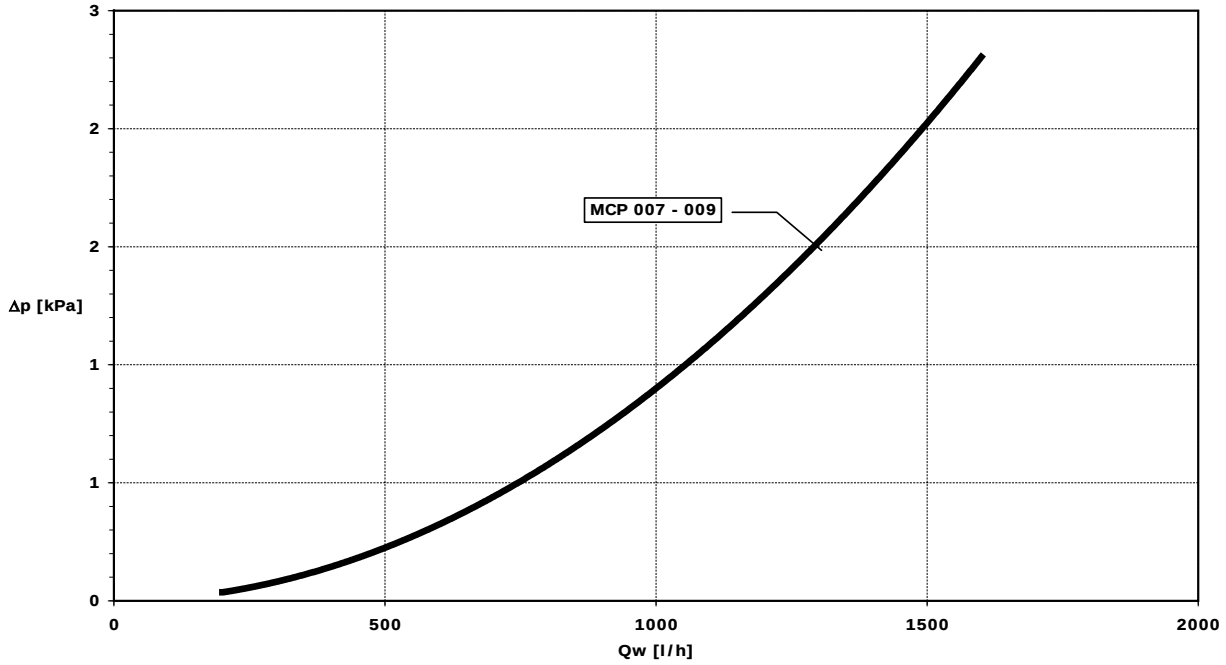

MCP 010 - 040
MCP T18 - T30

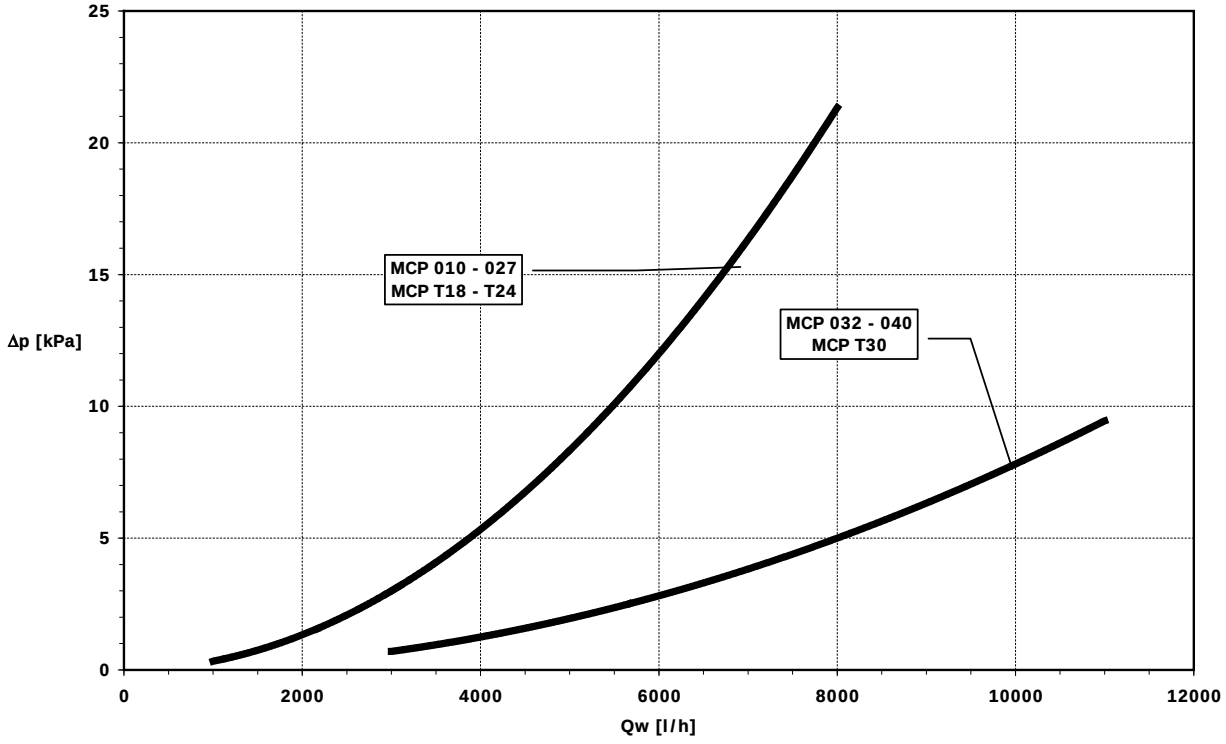

All copying, even partial, of this manual is strictly forbidden

10 AVAILABLE HEAD OF THE UNIT, SYSTEM SIDE AND DHW SIDE

The diagram below shows the available head (**Pu**) of the unit as a function of the water flow rate (**Qw**), assuming an average water temperature of 10°C, net of pressure drops.

Pressure drops of the Y filter are not counted.

MCP 007 ÷ 018

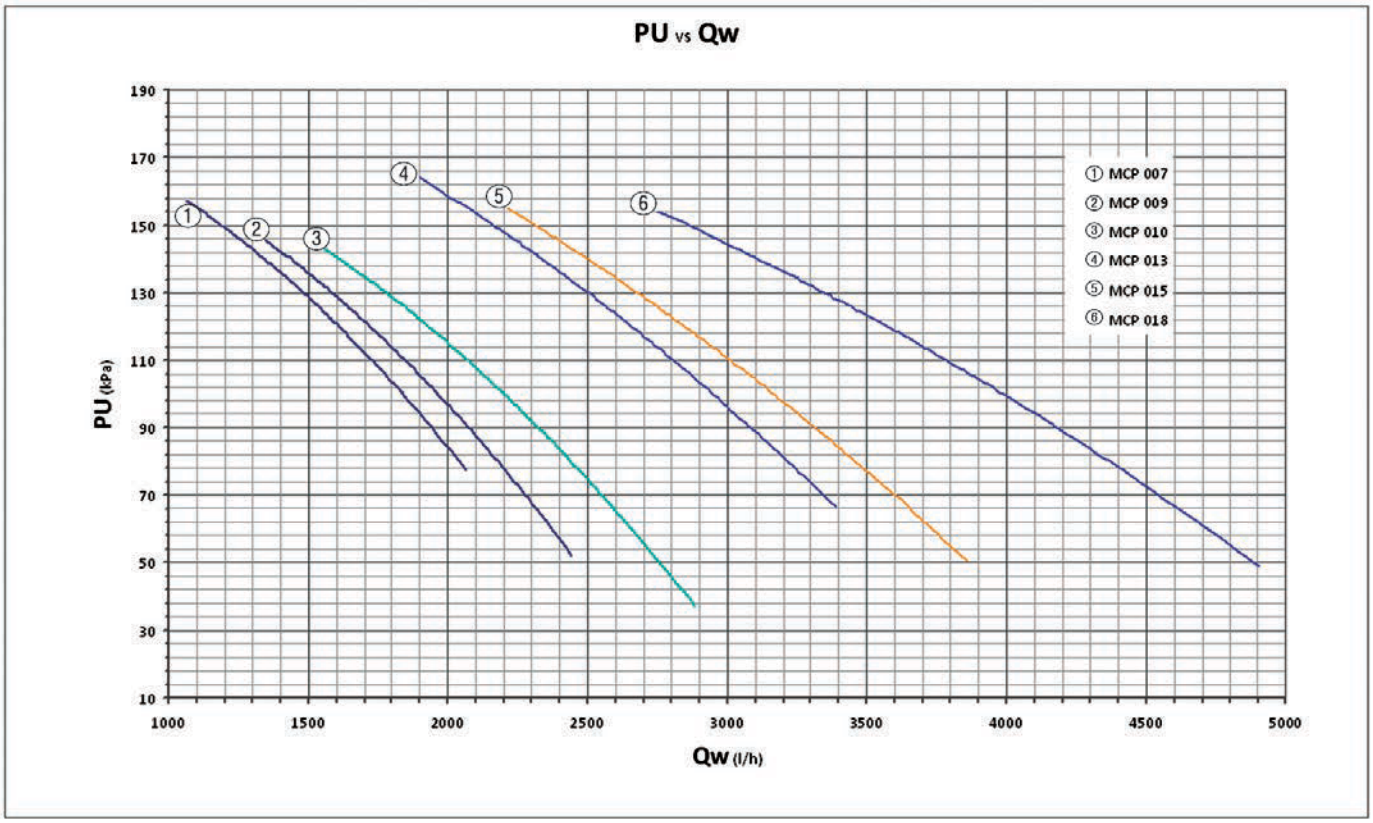

MCP 027 ÷ T30

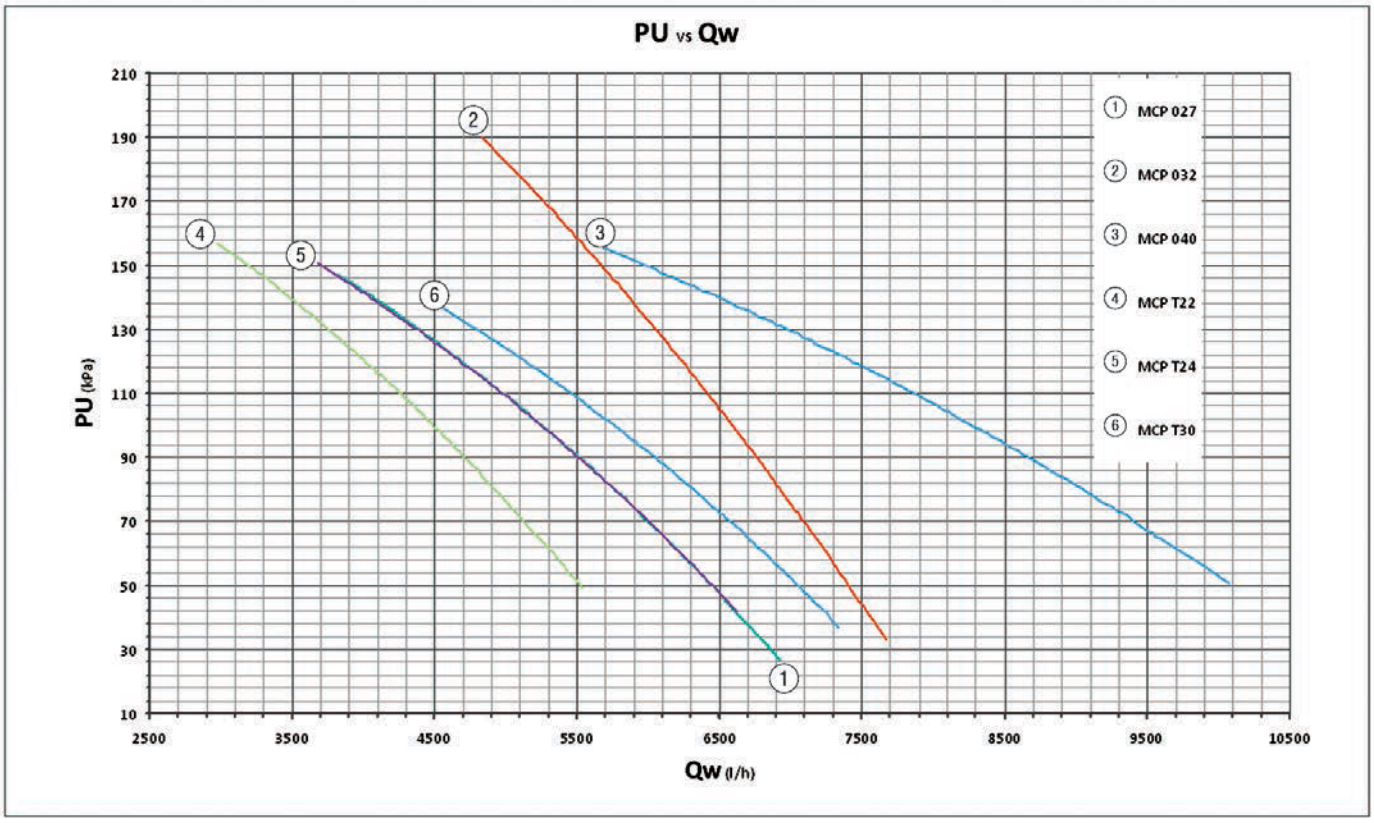

All copying, even partial, of this manual is strictly forbidden

11 WATER CIRCUIT

When setting up the water circuit of the unit, it is advisable to follow the directions below and in any case comply with local or national regulations.
Connect the pipes to the chiller using flexible couplings to prevent the transmission of vibrations and to compensate thermal expansions.
It is recommended to install the following components on the pipes:

- Temperature and pressure indicators for routine maintenance and monitoring of the unit. Checking the pressure on the water side will enable you to verify whether the expansion vessel is working efficiently and to promptly detect any water leaks within the equipment.
- Traps on incoming and outgoing pipes for temperature measurements, which can provide a direct reading of the operating temperatures.
- Regulating valves (gate valves) for isolating the unit from the water circuit.
- **Metal mesh filter (supplied), with a mesh size no greater than 1 mm, to be fitted on the inlet pipe to protect the exchanger from scale or impurities present in the pipes.**
- Air vent valves, to be placed at the highest points of the water circuit for the purpose of bleeding air. (The internal pipes of the unit are fitted with small air vent valves for bleeding the unit itself: this operation may only be carried out when the unit is disconnected from the power supply).
- Drainage tap and, where necessary, a drain tank for emptying out the equipment for maintenance purposes or when the unit is taken out of service at the end of the season. (A 1" drainage tap is provided on the optional storage tank: this operation may only be carried out when the unit is disconnected from the power supply).

It is of fundamental importance that the incoming water supply is hooked up to the connection marked "Water Inlet".
Otherwise the evaporator would be exposed to the risk of freezing since the antifreeze thermostat would not be able to perform its function; moreover the reverse cycle would not be respected in the cooling mode, resulting in additional risks of malfunctioning.
The dimensions and position of plumbing connections are shown in the dimension tables at the end of the manual.
The water circuit must be set up in such a way as to guarantee that the nominal flow rate of the water supplied to the evaporator remains constant (+/- 15%) in all operating conditions.
A standard feature of MCP units is a device for controlling the flow rate (flow switch or differential pressure switch) in the water circuit in the immediate vicinity of the evaporator.

11.1 SYSTEM WATER CONTENT AND CHARGING OF EXPANSION VESSEL

In models without a water storage reservoir it is necessary to ensure that the content of water within the system does not fall below 3.5 litres/kW in the case of cooling-only models and 4.5 litres/kW in the case of heat pump models. This level is necessary to prevent the water temperature from falling below the indoor unit enabling threshold during defrost cycles.

NOTE kW in reference to rated capacity

The expansion vessel is pre-charged to a pressure of 1.5 bars, sufficient for systems with a maximum height difference (H in the figure at the side) of 13 metres.
For greater height differences, refer to the table below in order to adjust the charging pressure of the expansion vessel accordingly.
In no case should the maximum height difference Hmax = 35 m be exceeded.

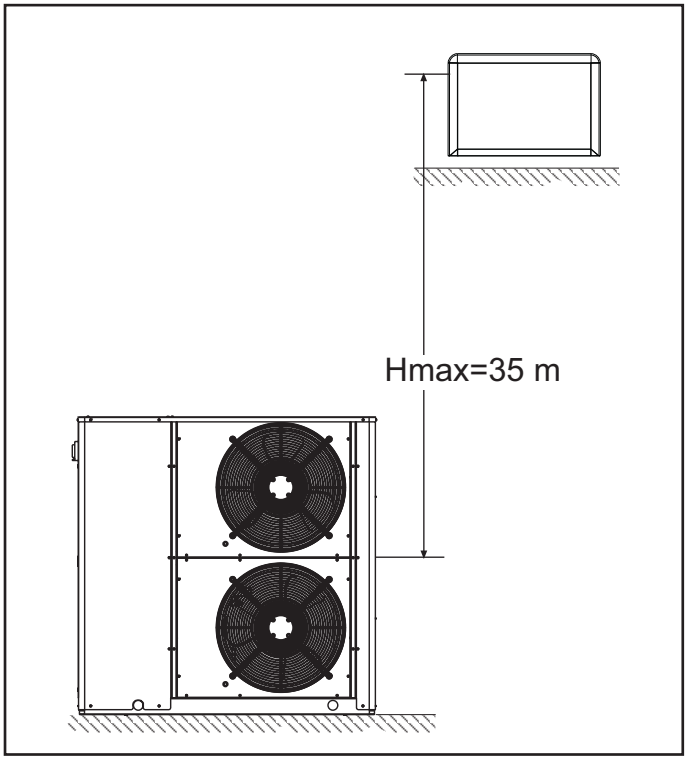

All copying, even partial, of this manual is strictly forbidden

11 WATER CIRCUIT

11.2 CHARACTERISTICS OF THE STORAGE RESERVOIR SYSTEM

We have already talked about the importance of the water in the system from an inertial point of view, we shall now look at the influence of the size of the storage reservoir in relation to the temperature during defrost.
We propose carrying out a simple check, for example, once the storage reservoir is selected for its inertial effect, requiring that at the end of the defrost cycle, the minimum temperature of the same (considered uniform for simplicity) is at least equal to a value that we consider the lower limit (for example, that maintaining the power exchanged by the terminals, or the air temperature produced at a sufficient value).

Note: Also in this case we will use a simplified method.

Define the following quantities:

P_{DEF}	Cooling capacity during the defrost cycle (chiller)
t_{def}	Duration of the chiller operation for defrosting
T_{INIZ}	Initial temperature of the fluid (eg. water)
T_{FIN}	Total time with compressors stationary
p	Density of the fluid
C_S	Specific heat of fluid
ΔT_{DEF}	fluid temperature decrease as a result of the defrost
E_{DEF}	Energy transferred to the fluid in the defrost
V_{H2O}	Volume of minimum fluid to obtain a final temperature no lower than T_{FIN}
$V_{H2O, SP}$	Minimum volume per kW of thermal power of the PdC

We can detail the simple relationship:

$$V_{H_2O} = \frac{E_{DEF} \times 1000}{\rho_{DEF} \times C_S \times \Delta T_{DEF}}$$

Where:

$$E_{DEF} = P_{DEF} \times t_{DEF} \times 60$$

$$\Delta T_{DEF} = T_{IN} - T_{FIN}$$

To better clarify the concept we propose a calculation example (assuming you consider the power in defrost approximately equal to the thermal power in the heat pump, if you do not have tables with the performance of the cooling power as a function of air and water temperature):

Input data

Power and timing			Temperature		Prop. Physical	
PHEAT	PDEF	tdef	TINIZ	TFIN	p	CS
kW	(kW)	(min)	(°C)	(°C)	(kg/m3)	(kJ/kg °C)
45.0	45.0	2.0	50	40	990	4.187

From which the defrost data is given and is followed by the minimum content of the storage reservoir:

Defrost data			Minimum content	Specific content
DT DEF	E DEF		VH20	VH20
(°C)	(kJ)		(l)	(l/kW)
10	5400	→	130	2.9

It is clear that this is an estimate and a safety margin would be advisable...

Note: the proposed method is obviously simplified, since the thermal power, especially with cooling, water temperature functions, the problem would need to be fully resolved and not by simple balancing.

All copying, even partial, of this manual is strictly forbidden

11 WATER CIRCUIT

11.3 CHARACTERISTICS AND SELECTION OF THE SANITARY STORAGE RESERVOIR

The purpose of this chapter is to estimate what would be the minimum temperature of the storage reservoir at the end of a withdrawal of hot water that can be considered (for project data) a "peak withdrawal".

Note: Also in this case we will use a simplified method.

Suppose for simplicity to withdraw for a given amount of time, a certain volume of hot water (which enters the storage reservoir at the network temperature and exits at the design temperature). We can imagine that, at worst, the temperature of the storage reservoir drops immediately and the multi-purpose machine is active to counteract the decrease in the temperature itself. In these conditions we will have a flow of heat entering the storage reservoir (the power of multi-purpose machine) and outgoing heat (the withdrawal of DHW), the difference between the two will determine the net energy withdrawal from the tank.

In other words, we have the quantities defined:

V_{ACS}	Withdrawal of domestic hot water from the storage reservoir, in litres
P_{PdC}	Power of the heat pump (or fraction) that works on the storage of DHW, in kW
t_{ACS}	Duration of the withdrawal of DHW from the storage reservoir, in minutes
T_{IN}	Inlet temperature of DHW from the network (15°C typically)
T_{ACS}	Output temperature of DHW from the storage reservoir (40 °C typically)
T_{INIZ}	Initial temperature of the storage reservoir (average) in °C
T_{FIN}	Final temperature of the storage reservoir (average) in °C (minimum acceptable value)
EPdC	Energy transferred to the storage reservoir from the PdC during the withdrawal, in kJ
E_{PdC}	Energy delivered to the DHW during the withdrawal, in kJ
V_{H2O}	Minimum volume of the storage reservoir to obtain a final temperature no lower than T_{FIN}

We will have:

$$V_{H_2O} = \frac{(E_{ACS} - E_{PDC}) \times 1000}{\rho \times C_S \times (T_{INIZ} - T_{FIN})}$$

Where:

$$E_{PdC} = P_{PdC} \times t_{ACS} \times 60$$

$$E_{ACS} = \rho \times V_{ACS} \times C_S \times (T_{ACS} - T_{IN})$$

Also in this case a numerical example may clarify the application:

Input data

Power and timing			Temperature		Reserv. temperature	
V_{ACS} (litres)	P_{PdC} (kW)	t_{ACS} (min)	T_N (°C)	T_{ACS} (°C)	T_{INIZ} (°C)	T_{FIN} (°C)
60	5.0	10	15	40	50	45

From which the two energies sources are obtained from both incoming and outgoing energies and therefore the minimum volume of water in the storage reservoir:

Heat exchanged			Minimum content	Specific content
E_{PdC} (kJ)	E_{ACS} (kJ)		V_{H20} (l)	V_{H20} (l/kW)
10	5400	→	155	2.9

Also in this case, it is clear that this is an estimate and a safety margin would be advisable...

All copying, even partial, of this manual is strictly forbidden

11 WATER CIRCUIT

PLUMBING DIAGRAMS

MCP (EVAPORATOR)

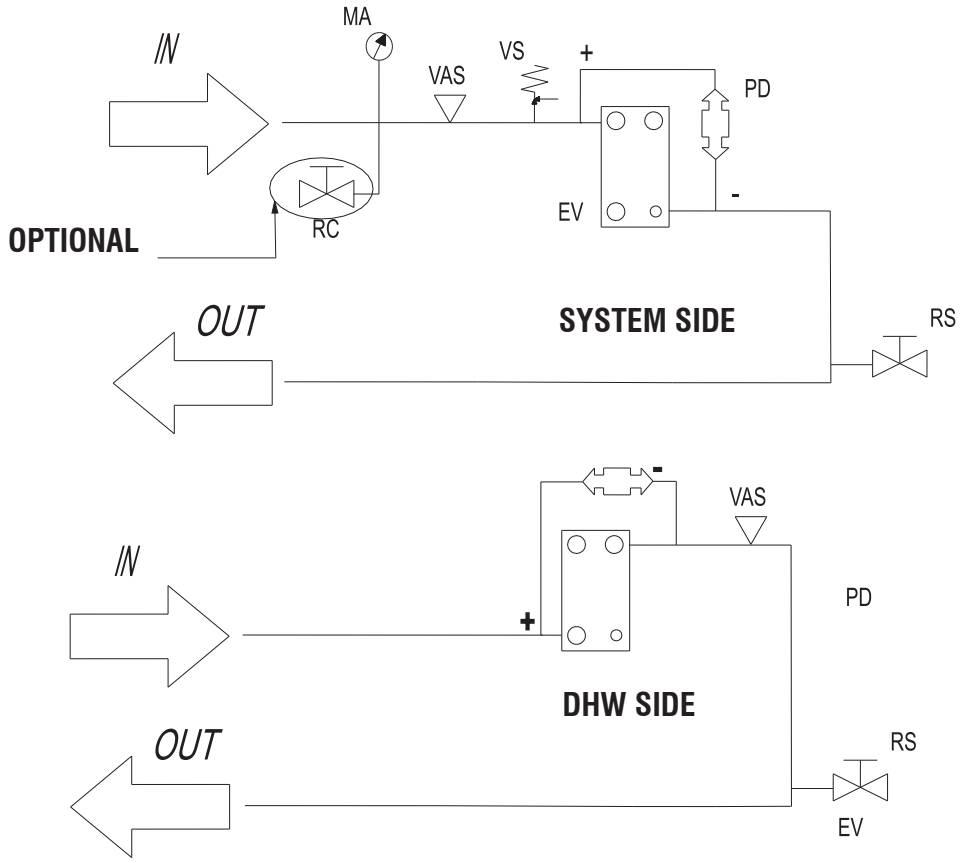

MCP (EVAPORATOR AND PUMP)

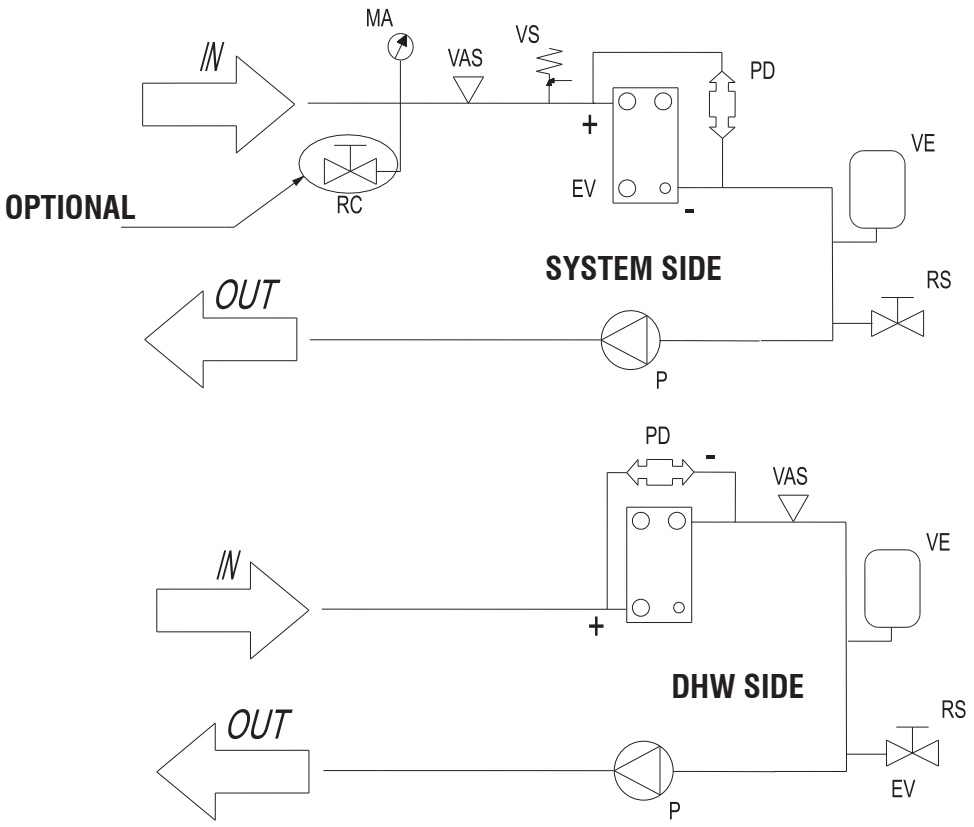

	LEGEND
VR	Fill valve
VS	Safety valve
EV	Evaporator
PD	Differential pressure switch
MA	Water pressure gauge
VAS	Air vent valve
VE	Expansion vessel
P	Pump
RS	Drainage tap
RC	Water filling cock
VU	Single-acting valves

All copying, even partial, of this manual is strictly forbidden

11 WATER CIRCUIT

PLUMBING DIAGRAMS

MCP (EVAPORATOR AND TANK)

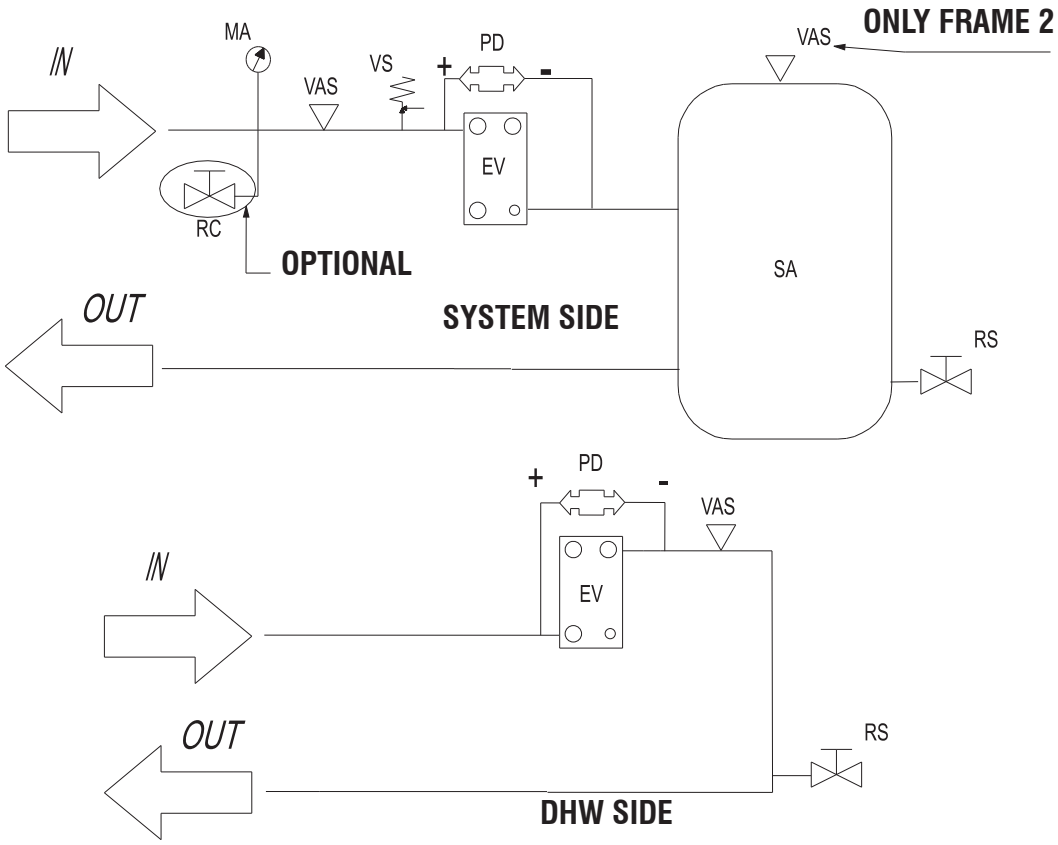

MCP (EVAPORATOR, PUMP AND TANK)

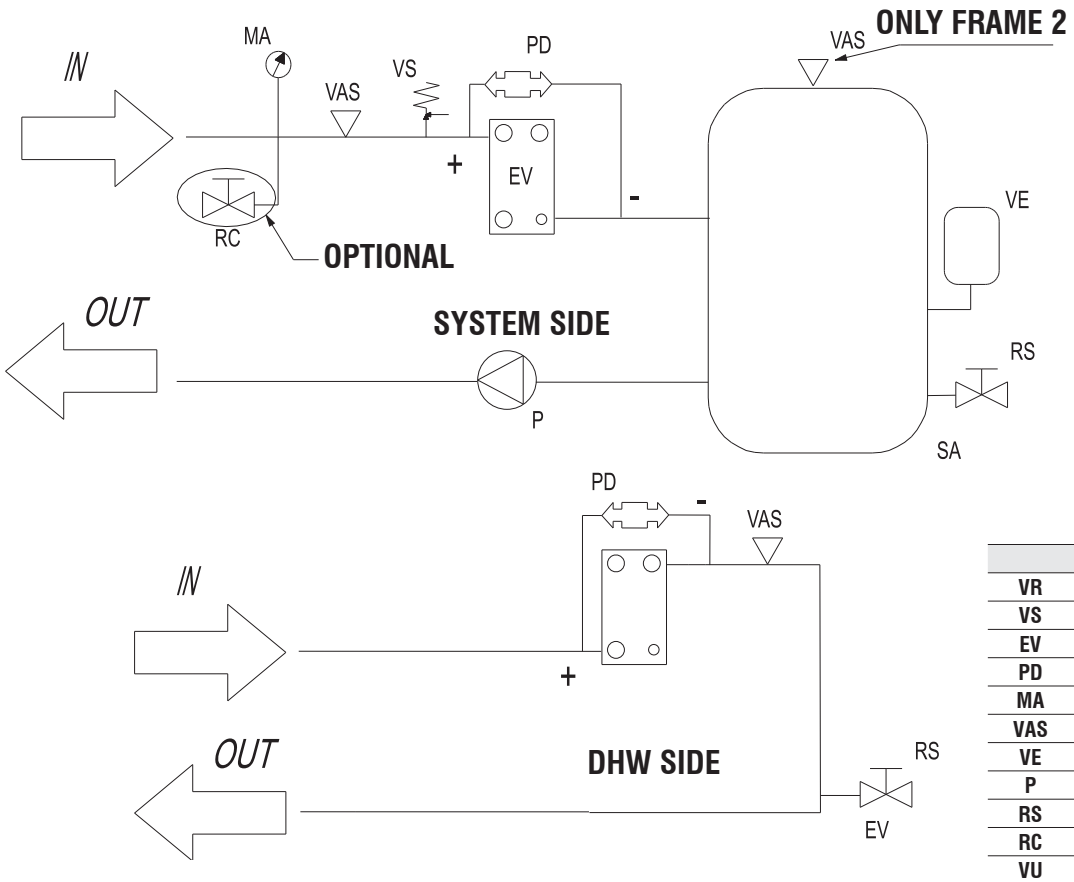

	LEGEND
VR	Fill valve
VS	Safety valve
EV	Evaporator
PD	Differential pressure switch
MA	Water pressure gauge
VAS	Air vent valve
VE	Expansion vessel
P	Pump
RS	Drainage tap
RC	Water filling cock
VU	Single-acting valves
SA	Storage tank

All copying, even partial, of this manual is strictly forbidden

11 WATER CIRCUIT

PLUMBING DIAGRAMS

MCP (EVAPORATOR AND DOUBLE PUMP)

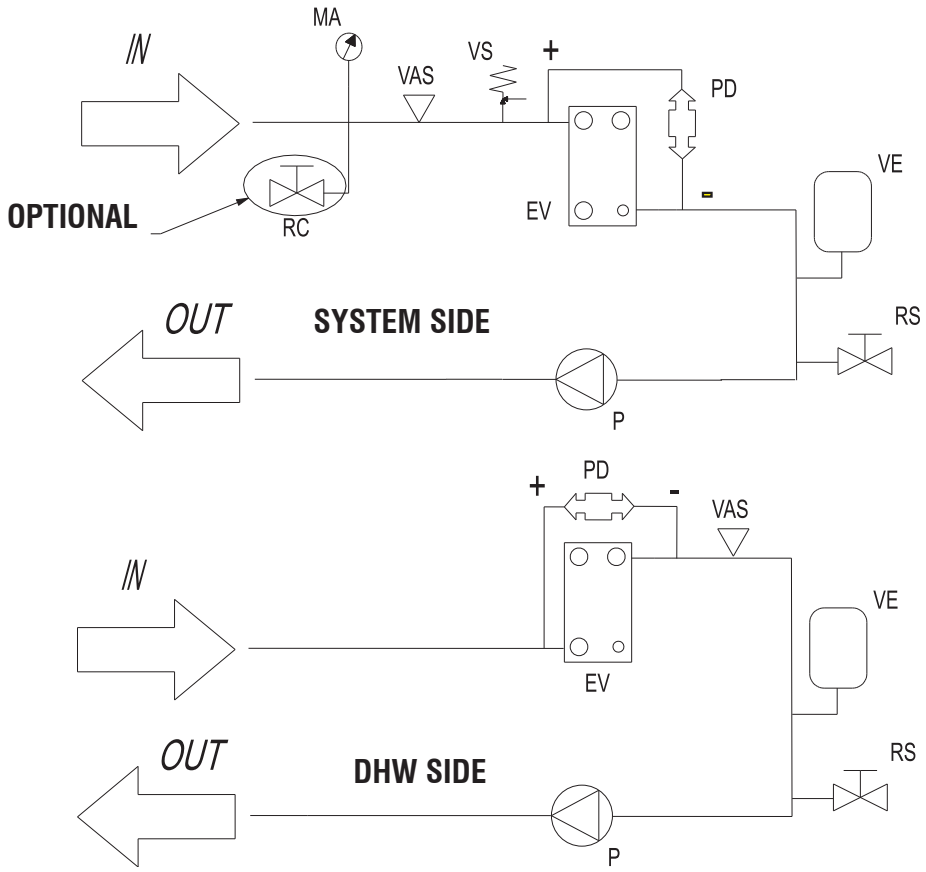

MCP (EVAPORATOR, DOUBLE PUMP AND TANK)

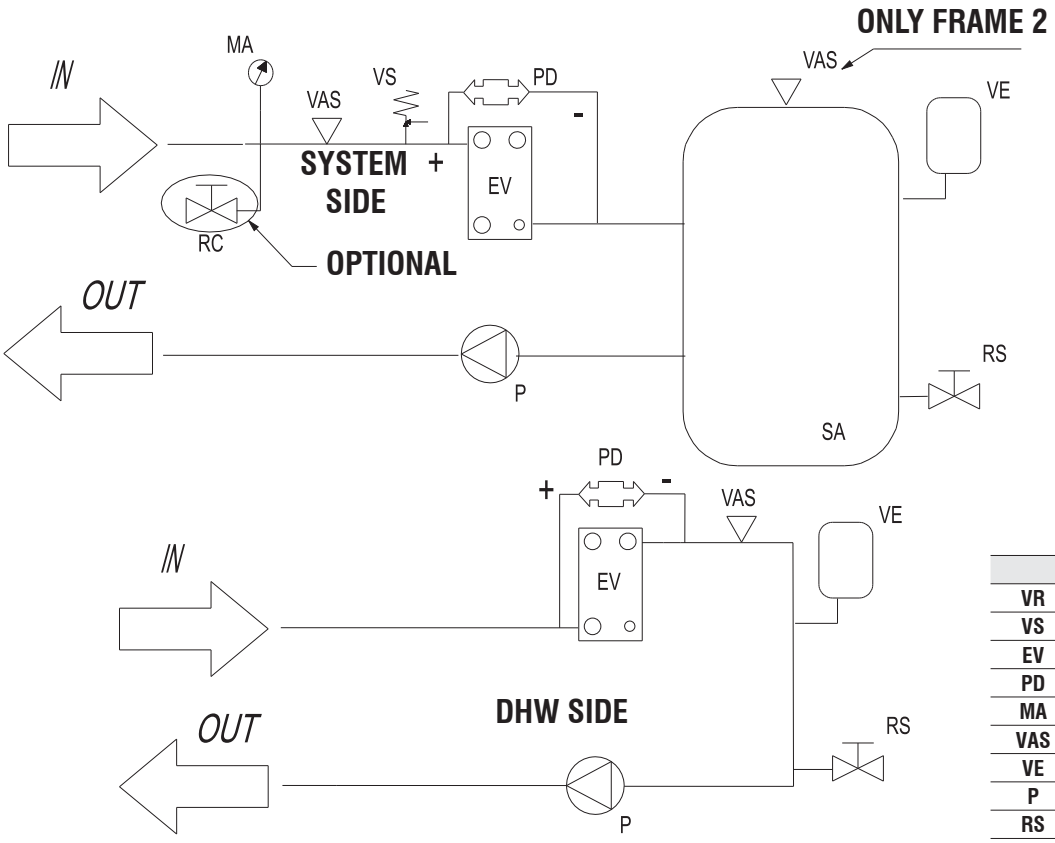

	LEGEND
VR	Fill valve
VS	Safety valve
EV	Evaporator
PD	Differential pressure switch
MA	Water pressure gauge
VAS	Air vent valve
VE	Expansion vessel
P	Pump
RS	Drainage tap
RC	Water filling cock
VU	Single-acting valves
SA	Storage tank

All copying, even partial, of this manual is strictly forbidden

12 ELECTRICAL DATA AND CONNECTIONS

MCP		007M	009M	010M	013M	T18M	T22M	T24M	007	009	010
Maximum power input	kW	3,4	4,6	5,1	6,3	9,1	10,2	12,3	3,6	4,6	5,3
Maximum current absorption	A	16,5	22,2	24,7	30,6	44,5	49,4	60,0	7,1	9,2	10,3
Starting absorbed current	A	77	98	109	152	119	133	180	33	47	53
Fan motor rated power	kW	0,135	0,135	0,135	0,135	0,135	0,135	0,135	0,135	0,135	0,135
Fan motor rated current	A	0,64	0,64	0,64	0,64	0,64	0,64	0,64	0,64	0,64	0,64
Pump motor rated power	kW	0,85	0,85	0,85	0,85	0,85	0,85	0,85	0,85	0,85	0,85
Pump motor rated current	A	1,23	1,32	1,42	2,13	2,74	2,88	3,07	1,23	1,32	1,42
Power supply	V/f/Hz	230-1-50							400-3N-50		
Auxiliary power supply	V/f/Hz	230-1-50									
Power cables	mm²	6	6	6	10	16	16	16	4	4	4
Remote control connecting cables	mm²	AWG22									
Safety fuse F	A	25	32	32	40	50	63	63	10	16	16
Circuit breaker IL	A	25	32	32	40	50	63	63	16	20	20
MCP		**013**	**015**	**018**	**T18**	**T22**	**T24**	**027**	**T30**	**032**	**040**
Maximum power input	kW	6,4	7,5	10,0	9,3	10,5	12,5	12,3	15,5	14,8	18,3
Maximum current absorption	A	12,6	15,0	20,3	18,5	20,6	24,0	24,6	29,8	30,2	36,2
Starting absorbed current	A	66	76	102	55	62	76	130	89	171	202
Fan motor rated power	kW	0,135	0,135	0,135	0,135	0,135	0,135	0,135	0,32	0,32	0,32
Fan motor rated current	A	0,64	0,64	0,64	0,64	0,64	0,64	0,64	1,75	1,75	1,75
Pump motor rated power	kW	0,85	0,85	0,85	0,85	0,85	0,85	0,85	0,85	1,09	1,09
Pump motor rated current	A	2,13	2,27	2,74	2,74	2,88	3,07	3,12	3,26	4,11	4,21
Power supply	V/f/Hz	400-3N-50									
Auxiliary power supply	V/f/Hz	230-1-50									
Power cables	mm²	4	4	6	6	6	10	10	10	10	16
Remote control connecting cables	mm²	AWG22									
Safety fuse F	A	20	20	25	25	25	32	32	40	40	50
Circuit breaker IL	A	20	25	25	25	25	32	32	40	40	50

- The maximum electrical input is the mains electricity that must be available in order for the unit to work.
- The maximum current absorption refers to the current that will trigger the internal safety devices of the unit.

This is the maximum current permitted in the unit. This value may never be exceeded; it must be used as a reference for determining the size of the power supply line and the related safety devices (refer to the wiring diagram supplied with the units).

MCP ELECTRICAL CONNECTION DIAGRAM WITH PCD REMOTE CONTROL PANEL AND pCO3 REMOTE CONTROL

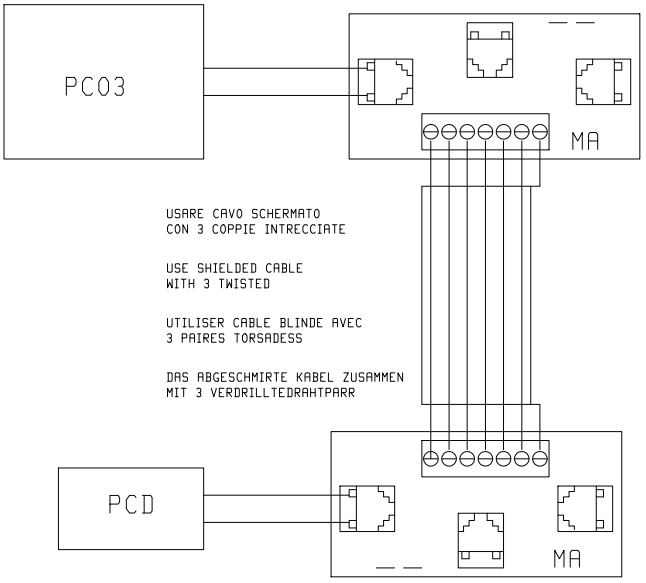

MCP ELECTRICAL CONNECTION DIAGRAM WITH MYCHILLER REMOTE CONTROL

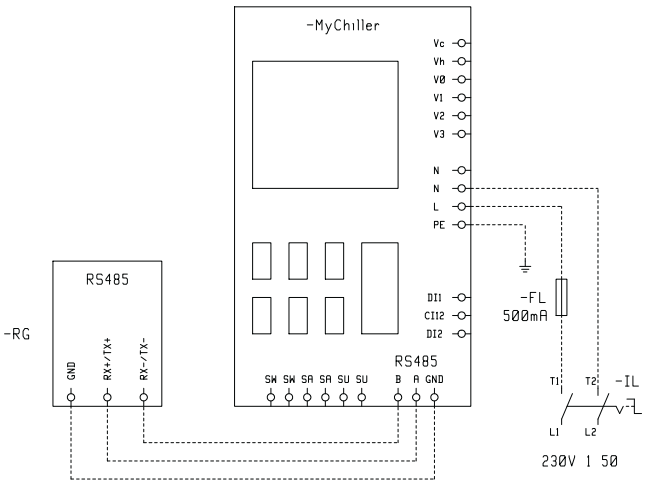

Note: Should the unit go into an alarm status, a voltage of 24V will be present on the terminals of the electric control panel; where an interface with a voltage-free contact is desired, a relay must be fitted by the installer.

All copying, even partial, of this manual is strictly forbidden

13 DIMENSIONS

Legend:

1 1" $^1/_4$ female System water inlet
2 1" $^1/_4$ female Domestic hot water inlet
3 1" $^1/_4$ female System water outlet
4 1" $^1/_4$ female Domestic hot water outlet
5 Safety valve discharge outlet provided with rubber ring holder
6 $^1/_2$" male Water supply (optional tap)
7 $^1/_2$" female System water drainage
8 $^1/_2$" female Domestic hot water drainage
9 Power supply diameter 28 mm
10 Electric panel
11 Fastening points for vibration dampers

Dimensions in mm

MCP 07 ÷ 15

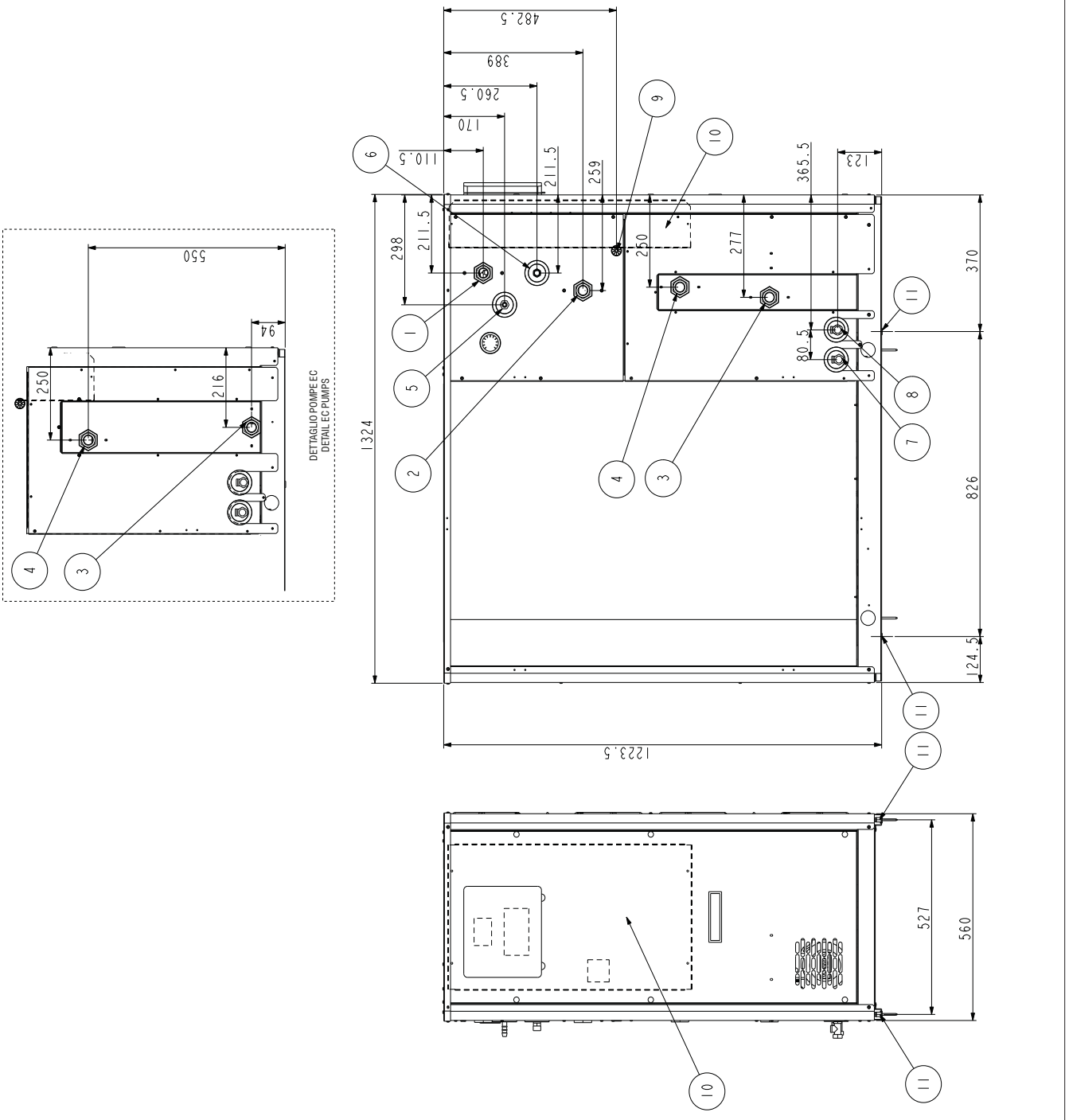

All copying, even partial, of this manual is strictly forbidden

13 DIMENSIONS

Legend:

1 1" 1/4 female System water inlet
2 1" 1/4 female Domestic hot water inlet
3 1" 1/4 female System water outlet
4 1" 1/4 female Domestic hot water outlet
5 Safety valve discharge outlet provided with rubber ring holder
6 1/2" male Water supply (optional tap)
7 1/2" female System water drainage
8 1/2" female Domestic hot water drainage
9 Power supply diameter 28 mm
10 Electric panel
11 Fastening points for vibration dampers

Dimensions in mm

MCP 18 ÷ 27

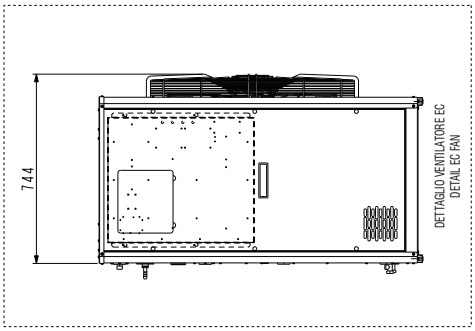

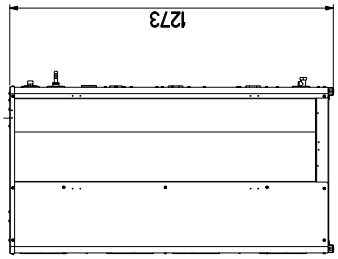

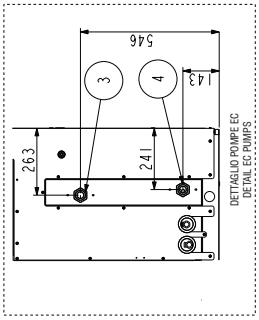

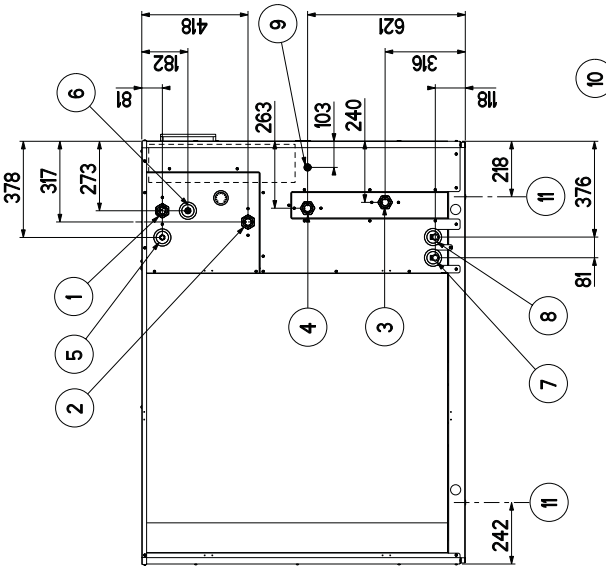

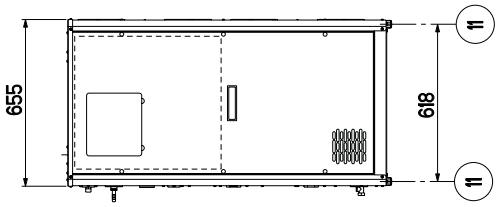

All copying, even partial, of this manual is strictly forbidden

13 DIMENSIONS

Legend:

1 1" $^1/_4$ female System water inlet
2 1" $^1/_4$ female Domestic hot water inlet
3 1" $^1/_4$ female System water outlet
4 1" $^1/_4$ female Domestic hot water outlet
5 Safety valve discharge outlet provided with rubber ring holder
6 $^1/_2$" male Water supply (optional tap)
7 $^1/_2$" female System water drainage
8 $^1/_2$" female Domestic hot water drainage
9 Power supply diameter 28 mm
10 Electric panel
11 Fastening points for vibration dampers

Dimensions in mm

MCP 18 ÷ 24T

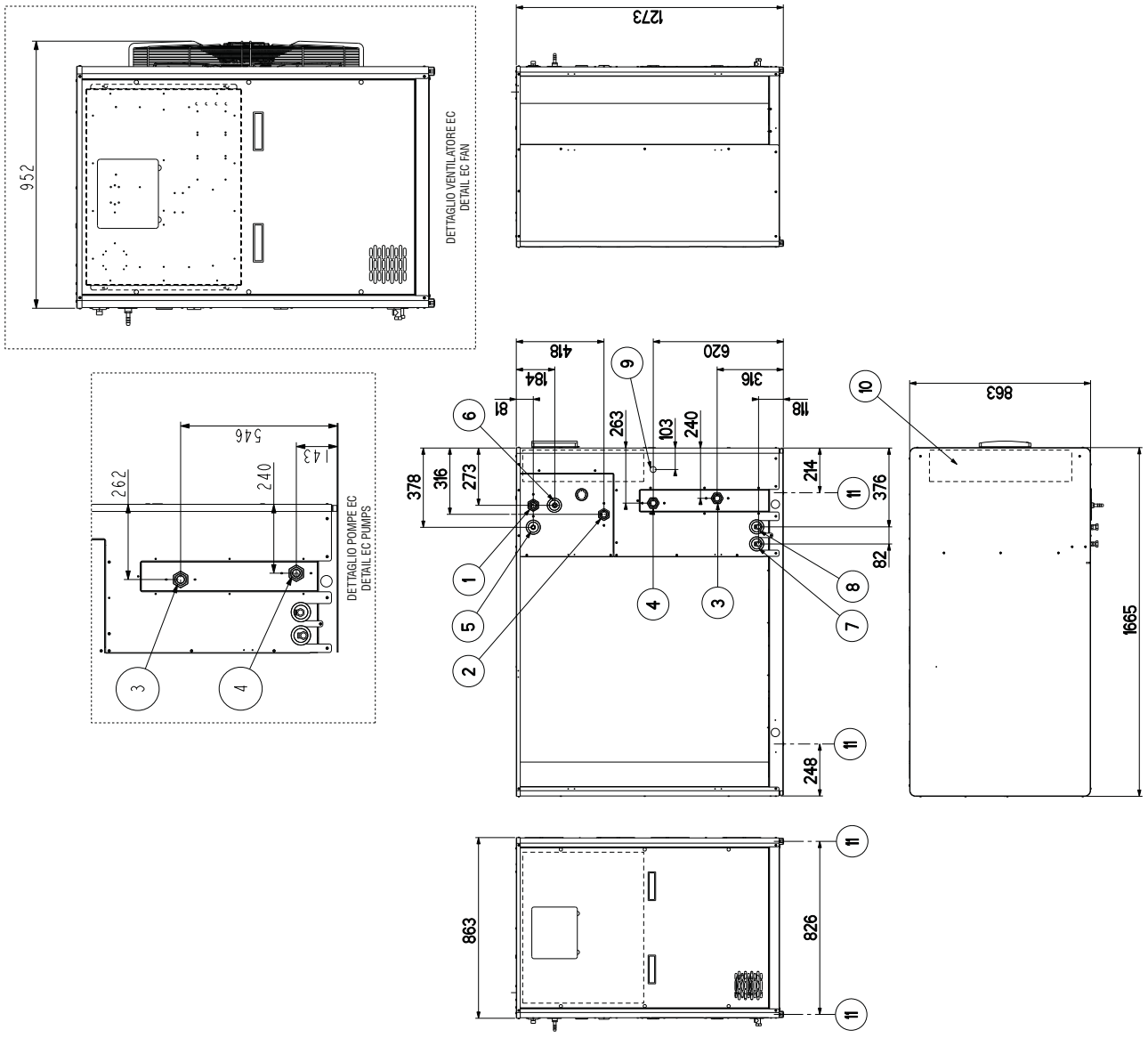

All copying, even partial, of this manual is strictly forbidden

13 DIMENSIONS

Legend:

1 Water entry in system 1" 1/4 female
2 1" 1/4 female Domestic hot water inlet
3 1" 1/4 female System water outlet
4 1" 1/4 female Domestic hot water outlet
5 Safety valve discharge outlet provided with rubber ring holder
6 1/2" male Water supply (optional tap)
7 1/2" female System water drainage
8 1/2" female Domestic hot water drainage
9 Power supply diameter 28 mm
10 Electric panel
11 Fastening points for vibration dampers

Dimensions in mm

MCP 32 ÷ 40 - MCP 30T

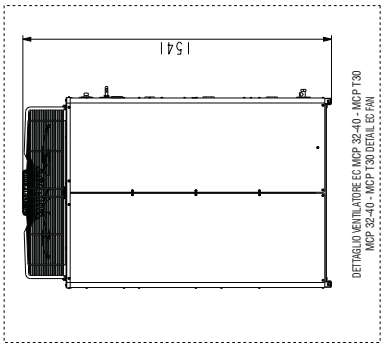

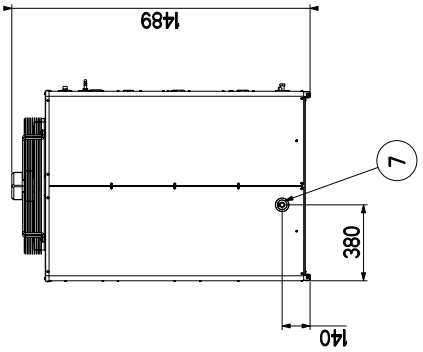

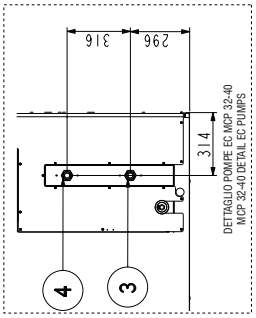

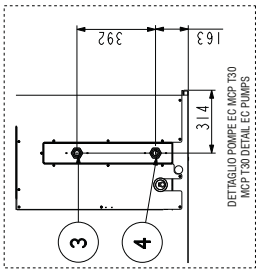

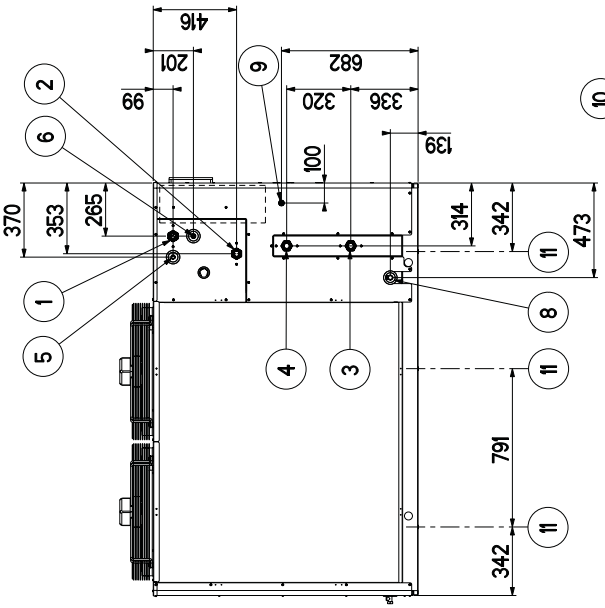

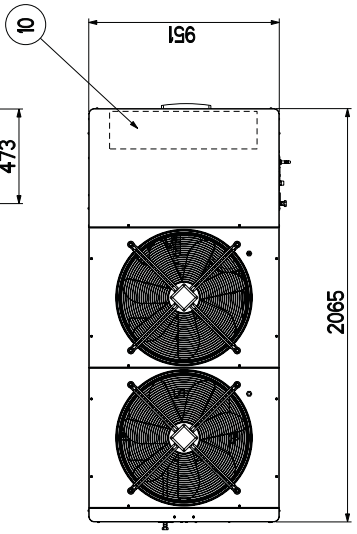

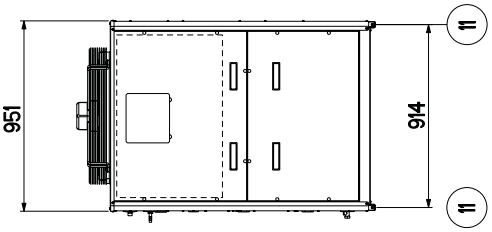

All copying, even partial, of this manual is strictly forbidden

14 INSTALLATION CLEARANCE REQUIREMENTS

To guarantee the proper functioning of the unit and access for maintenance purposes, it is necessary to comply with the minimum installation clearance requirements shown in figures 1, 2 and 3.
There must be no obstacles blocking the path of the air flow from the fans.
Avoid any and all situations of backflow of hot air between air outlet and inlet of the unit.
If even only one of the above conditions is not fulfilled, please contact the manufacturer to check for feasibility.

In the design of the MCP series, special care has been taken to minimise noise and vibrations transmitted to the ground.
Even greater insulation may be obtained, however, by using vibration damping base supports (available as optional accessories).
In the case of adopting anti-vibration base supports, it is strongly recommended the adoption of anti-vibration joints even on the plumbing.
If you place the unit on unstable ground (varied soils, gardens, etc..) it is advisable to support using a slab of appropriate size.

Warning: ⚠ the unit or DHW production produces condensation while operating in the heating mode.

1

MCP 07 ÷ 15

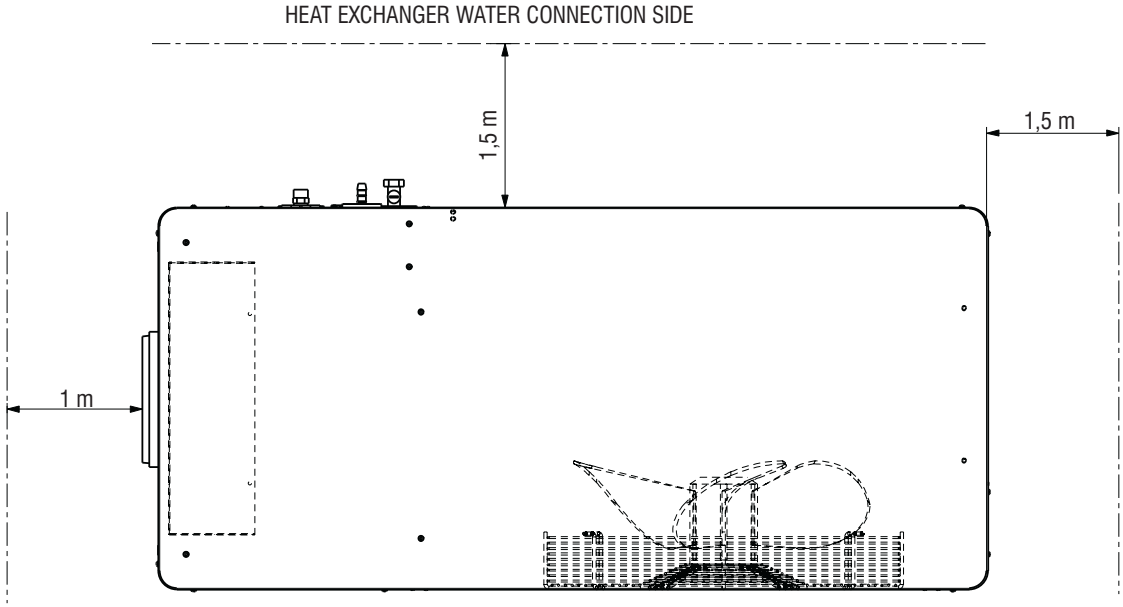

2

MCP 18 ÷ 27 / MCP 18 ÷ 24T

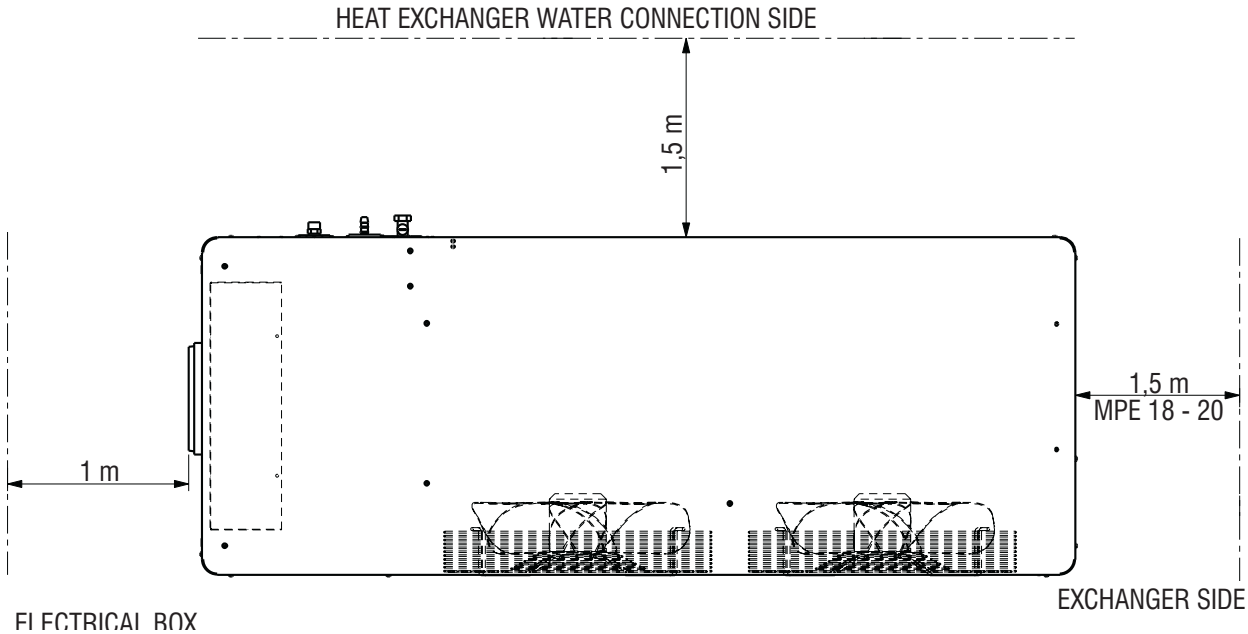

All copying, even partial, of this manual is strictly forbidden

14 INSTALLATION CLEARANCE REQUIREMENTS

3

MCP 32 ÷ 40 - MCP 30T

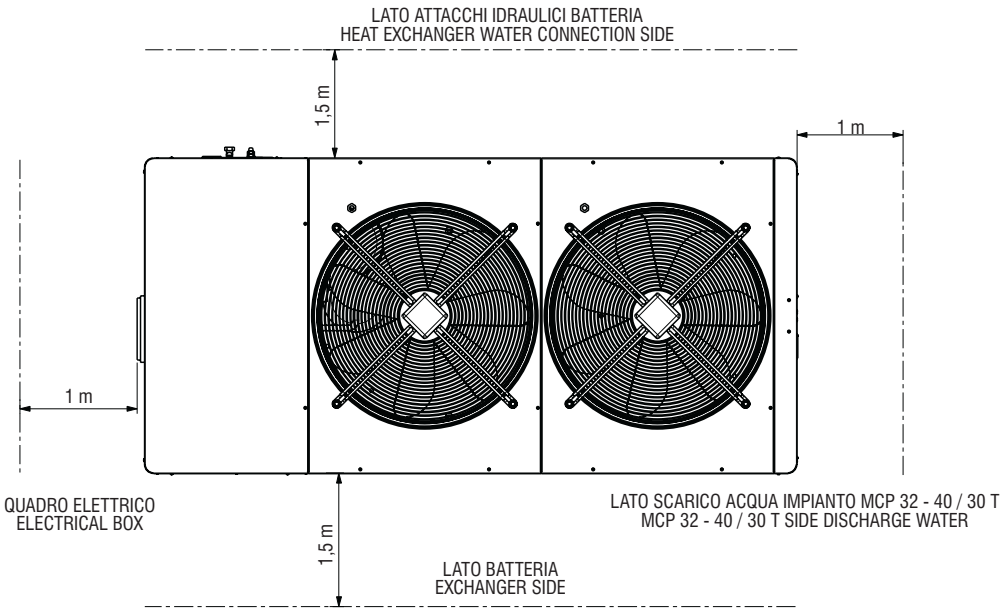

15 POSITIONING

It is important to bear in mind the following aspects when choosing the best site for installing the unit:
- Size and origin of water pipes;
- Location of the power supply;
- Solidity of the supporting surface;
- Avoid obstacles to the outflow of air from the fan which could cause back suction (see section on “installation clearance requirements”);
- Direction of prevalent winds: (position the unit so that prevalent winds do not alter the fan air flow).
  A prevalent wind blowing from a direction opposite to the fan air flow will reduce the maximum air temperature to a lower value than specified in the operating limits,
  a wind blowing in the same direction as the fan air flow will increase the minimum air temperature to a higher value than specified in the operating limits.
  Also in the heat pump mode, wind may have the effect of reducing the unit’s operating range.
- Avoid the possible reverberation of sound waves (do not install the unit in narrow or cramped spaces).
- Ensure adequate accessibility for maintenance or repairs (see section on “installation clearance requirements”).

15.1 POSITIONING OF VIBRATION DAMPERS (ACCESSORY)

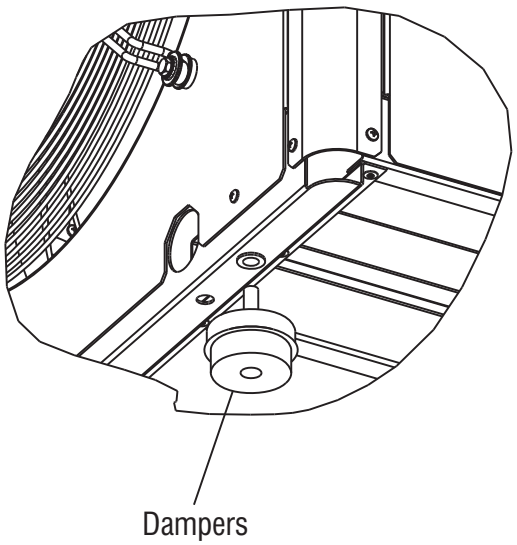

MCP	NO. OF VIBRATION DAMPERS
07 - 15	4
18 - 27	4
18 - 24T	4
32 - 40	6
30T	6

All copying, even partial, of this manual is strictly forbidden

Galletti
AIR CONDITIONING

www.galletti.it

40010 Bentivoglio (BO) Via Romagnoli 12/a Tel. + 39 051/8908111 - Fax. 051/8908122
Company UNI EN ISO 9001 and OHSAS 18001 certified