Galletti
AIR CONDITIONING

GB

INSTALLATION, USE AND MAINTENANCE MANUAL

MPI DC

CHILLER AND HEAT PUMPS
DC-INVERTER

08 kW - 29 kW

CE

eco R410A

EUROVENT CERTIFIED PERFORMANCE
www.eurovent-certification.com

INDEX

1 THE MPI DC SERIES ... 5
1.1 Field of application ... 5
1.2 Models and versions ... 5
1.3 Components lay-out ... 6
1.4 Water circuits ... 9
2 INSPECTION, CONVEYANCE DIMENSIONAL AND SITING ... 11
2.1 Inspection ... 11
2.2 Conveyance ... 11
2.3 Dimensional ... 12
2.4 Siting ... 15
2.4.1 Installation clearance requirements ... 15
2.5 Dampers siting ... 17
3 PLUMBING AND ELECTRICAL CONNECTIONS ... 18
3.1 Plumbing connection ... 18
3.1.1 Hydraulic connection ... 18
3.1.2 Recommended water circuit ... 18
3.1.3 Filling the system ... 19
3.2 Electrical connections ... 19
3.3 Electrical data ... 20
4 STARTING UP ... 22
4.1 Preliminary checks ... 22
5 MICROPROCESSOR CONTROL ... 23
6 OPERATING LIMITS ... 23
6.1 Operating limits in chiller mode ... 23
6.2 Operating limits in heat pump mode ... 23
6.3 Thermal carrying fluid ... 23
7 CONTROL AND SAFETY DEVICES ... 24
7.1 Control devices ... 24
7.1.1 Service thermostat ... 24
7.1.2 Control device settings ... 24
7.2 Safety devices ... 24
7.2.1 High pressure switch ... 24
7.2.2 Low pressure switch ... 24
7.2.3 Antifreeze thermostat ... 24
7.2.4 Water differential pressure switch ... 24
7.2.5 Water safety valve ... 24
7.2.6 Safety device settings ... 24
8 ROUTINE MAINTENANCE AND CHECKS ... 25
8.1 Checks to be performed by the user ... 25
8.2 Checks and maintenance to be performed by specialised personnel ... 25
9 RETIRING THE UNIT ... 26
10 TECHNICAL FEATURES ... 26
10.1 Water chillers rated technical data ... 26
10.2 Heat pumps rated technical data ... 27
11 COOLING CIRCUITS ... 29
12 TROUBLESHOOTING ... 30

TRANSLATION OF ORIGINAL INSTRUCTIONS

WATER CHILLERS AND HEAT PUMPS ARE IN ACORDARCE WITH THE LAW 97/23/CE (PED) FILLING IN D1 FORM, APPROVED BY THE THIRD NOTIFIED BODY ICIM N°0425.

The technical and dimensional data reported in this manual may be modified in view of any product improvement.

All copying, even partial, of this manual is strictly forbidden

The unit data are reported on the rating label in this page

The label shows the following data:
- Series and size of the unit
- Date of manufacture
- Main technical data
- Manufacturer
- The label is applied on the unit, usually on the enclosing panels beside the condenser coil.

IMPORTANT: NEVER REMOVE THE LABEL
- Serial number of the unit
- The serial number permits to identify the technical characteristics and the components installed
- Without this datum it will be impossible to identify the unit correctly

Galletti S.p.A. via L.Romagnoli 12/a
40010 Bentivoglio (BO) Italia

CE 0425

Made in Italy
CATEGORIA 2

Serial number
Code
Date of production
Cooling capacity (W)
Heating capacity (W)
Power supply
Power input (kW)
Weight (kg)
Max power input (kW)
Max running amperage (A)
HP Power input (kW)
Refrigerant
Max refrigerant pressure (bar)
Max refrigerant temperature (°C)

All copying, even partial, of this manual is strictly forbidden

GENERAL CAUTIONARY NOTES

- Keep this manual intact in a safe place for the all life of the unit.
- Carefully read all the information contained in this manual, paying special attention to sections marked "Important" and "Warning"; failure to comply with the instructions provided could result in injury to persons or damage to the equipment.
- Should a fault occur, consult this manual and if necessary contact the nearest Galletti S.p.A. service centre.
- All installation and maintenance operations must be carried out by qualified personnel, unless otherwise indicated in this manual.
- **The first start up must be carried out exclusively by qualified personnel and authorized by Galletti SpA (see warranty sheet attached).**
- Before performing any work on the unit, disconnect it from the power supply.
- Failure to comply with the rules provided in this manual will result in the immediate invalidation of the warranty.
- Galletti S.p.A. shall not accept any liability for injury or damage resulting from improper use of the equipment or failure to comply with the directions provided in this manual and on the unit itself.
- **It is obligatory to install a filter to protect the heat exchangers. Not doing so invalidates the warranty.**
- For further information or communication, please contact the company at: info@galletti.it
- To find out the weight of each unit, please refer to the table in the paragraph “Rated specifications”

SAFETY SYMBOLS

Read the manual carefully

WARNING

Use personal protective equipment

USE SUITABLE PPE (GLOVES FOR REFRIGERANT, PROTECTIVE GOGGLES).

All copying, even partial, of this manual is strictly forbidden

1 THE MPI DC SERIES

1.1 FIELD OF APPLICATION

MPI DC air-condensed water chillers and heat pumps have been designed to cool and heat water for air conditioning and heating systems in residential or commercial buildings.

The MPI DC range units are intended for outdoor installation (IP24 protection degree), in a position not accessible to the public.

If protection grids are not provided (accessory) and if the machine can be reached by non-specialised personnel, access to the finned coil must be prohibited using appropriate barriers.

Do not install the unit in environments with gas or flammable dusts.

1.2 MODELS AND VERSIONS

All models are charged with R410A refrigerant.

The choice of some options can prevent the choice of some options or oblige the selection of other fields. To contact the Galletti for verification

Complete Unit Code	M	P	I	D	C	0	1	4	H	0	A	A	A	1	0	0	C	0	0	0	0	0	0	0	2

Version 0
- Single compressor **0**

Model (size) 1 4

Operation H
- Chiller **C**
- Heat pump **H**

Power Supply 0
- Standard 400 - 3N - 50 **0**
- single phase **M**

Refrigerant A
- R410a **A**

Revision A
- initial **A**

Expansion Valve A
- Electronic expansion valve **A**

Pump and accessories 1
- modulating pump - expansion vessel - valve **1**
- BLDC pump- expansion vessel - valve **2**

Buffer tank 0
- Not present **0**
- present + expansion vessel **S**

Heat Recovery 0
- Not present **0**

Condensing control C
- With modulating air flow **C**
- BLDC fans **E**

Antifreeze kit 0
- Not present **0**
- Present, standard unit **E**
- Present, unit with pump and vessel **P**
- Present, unit with pump, vessel and tank **S**

Acoustic insulation 0
- Not present **0**
- Sound proofing insulation for compressor housing **1**
- Compressor sound jackets **2**
- Option 1 + option 2 **3**

Refrigerant circuit accessoires 0
- Not present **0**
- Refrigerant gauge **M**

Remote control 0
- Not present **0**
- RS485 port (modbus + carel protocol) **2**
- Simplified (PCDS) **S**
- ADVANCED microprocessor remote control PCOXS **X**
- clock card **C**

Special coil 0
- Standard **0**
- Copper / copper heat exchanger **R**
- Cataphoresis **C**
- “Blygold” **B**
- Hydrophilic **I**

Protection grille 0
- Not present **0**
- Present **G**

Additional options 0
- Not present **0**
- coil electric heater (only on heat pump version) **4**

Control panel 2
- pCOXS **2**

All copying, even partial, of this manual is strictly forbidden

1 THE MPI DC SERIES

1.3 COMPONENTS LAY-OUT

MPI DC 08

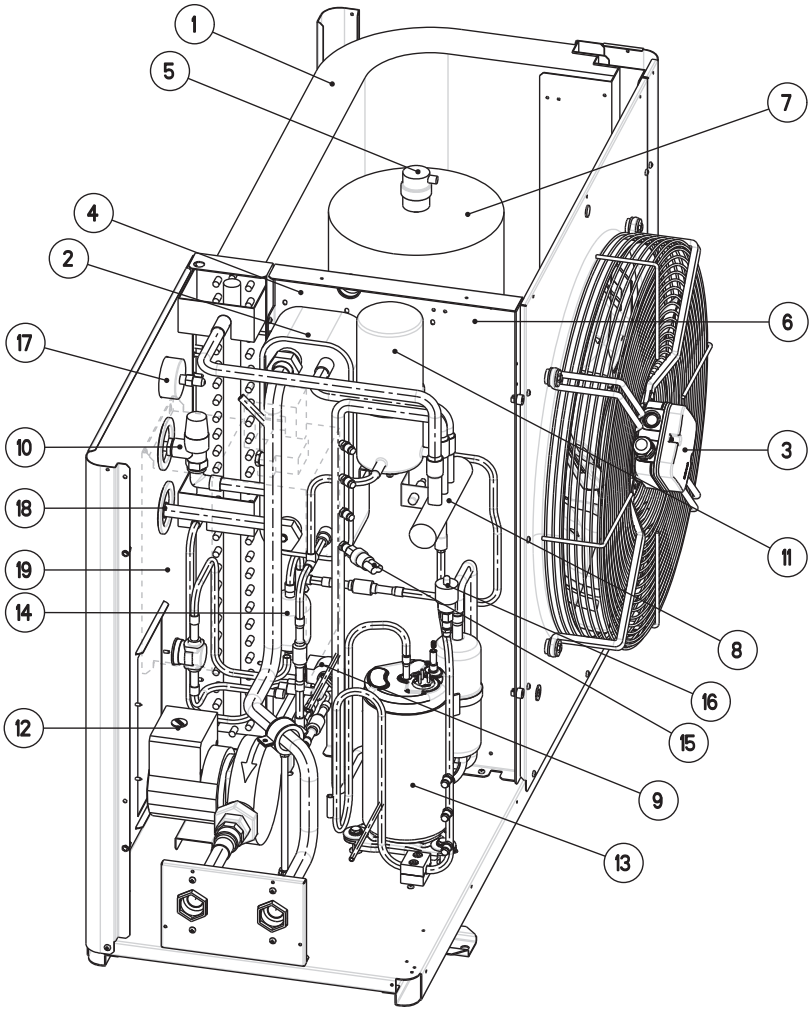

	Description
1	R410A-air heat-exchanger
2	R410A-water heat-exchanger
3	Fans
4	Water differential pressure switch (fan housing)
5	Automatic air purge valve
6	Expansion vessel (fan housing)
7	Water tank (accessory)
8	4-way valve (MPI DC H)
9	Electronic expansion valve
10	Water safety valve
11	Liquid receiver
12	Pump
13	Compressor
14	Refrigerant filter
15	Low pressure switch and charge port
16	High pressure switch and charge port
17	Water gauge
18	Water charge
19	Inverter

All copying, even partial, of this manual is strictly forbidden

1 THE MPI DC SERIES

1.3 COMPONENTS LAY-OUT

MPI DC 10 - 18

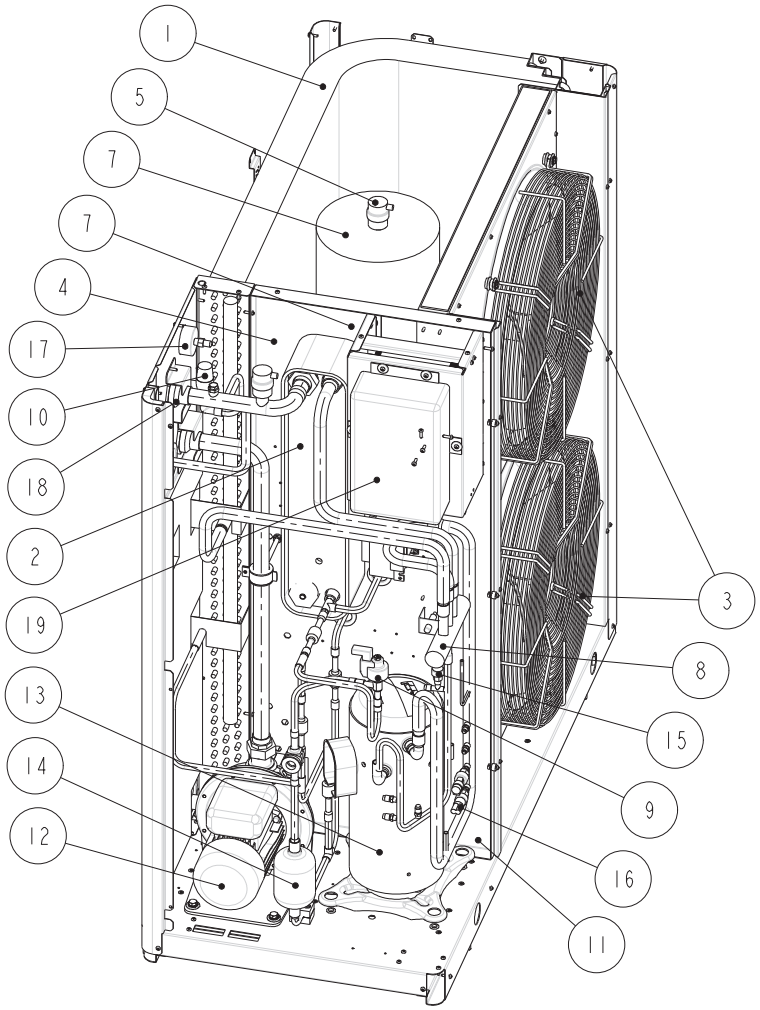

	Description
1	R410A-air heat-exchanger
2	R410A-water heat-exchanger
3	Fans
4	Water differential pressure switch (fan housing)
5	Automatic air purge valve
6	Expansion vessel (fan housing)
7	Water tank (accessory)
8	4-way valve (MPI DC H)
9	Electronic expansion valve
10	Water safety valve
11	Liquid receiver (fan housing)
12	Pump
13	Compressor
14	Refrigerant filter
15	Low pressure switch and charge port
16	High pressure switch and charge port
17	Water gauge
18	Water charge
19	Inverter

All copying, even partial, of this manual is strictly forbidden

1 THE MPI DC SERIES

1.3 COMPONENTS LAY-OUT

MPI DC 23 - 29

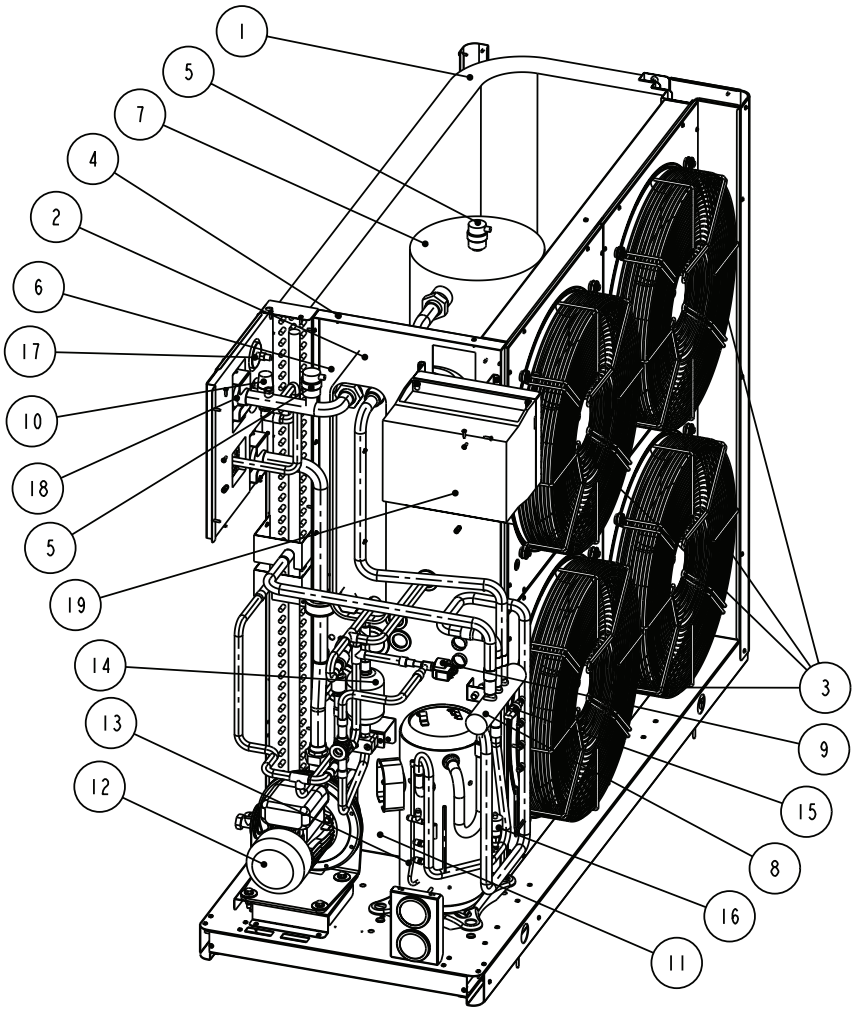

	Description
1	R410A-air heat-exchanger
2	R410A-water heat-exchanger
3	Fans
4	Water differential pressure switch (fan housing)
5	Automatic air purge valve
6	Expansion vessel (fan housing)
7	Water tank (accessory)
8	4-way valve (MPI DC H)
9	Electronic expansion valve
10	Water safety valve
11	Liquid receiver (fan housing)
12	Pump
13	Compressor
14	Refrigerant filter
15	Low pressure switch and charge port
16	High pressure switch and charge port
17	Water gauge
18	Water charge
19	Inverter

All copying, even partial, of this manual is strictly forbidden

1 THE MPI DC SERIES

1.4 WATER CIRCUITS

MPI DC (EVAPORATOR AND PUMP)

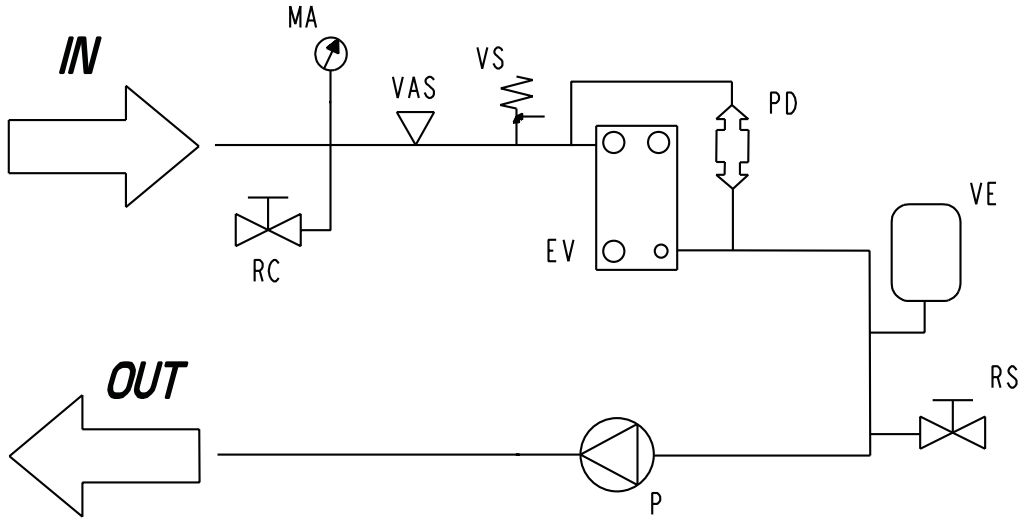

	LEGEND
VS	Safety valve
EV	Evaporator
PD	Water differential pressure switch
MA	Water gauge
VAS	Air bleed hole
VE	Expansion vessel
P	Pump
RS	Drain
RC	Water charge
VU	Check valve

All copying, even partial, of this manual is strictly forbidden

1 THE MPI DC SERIES

1.4 WATER CIRCUITS

MPI DC (EVAPORATOR, PUMP AND BUFFER TANK)

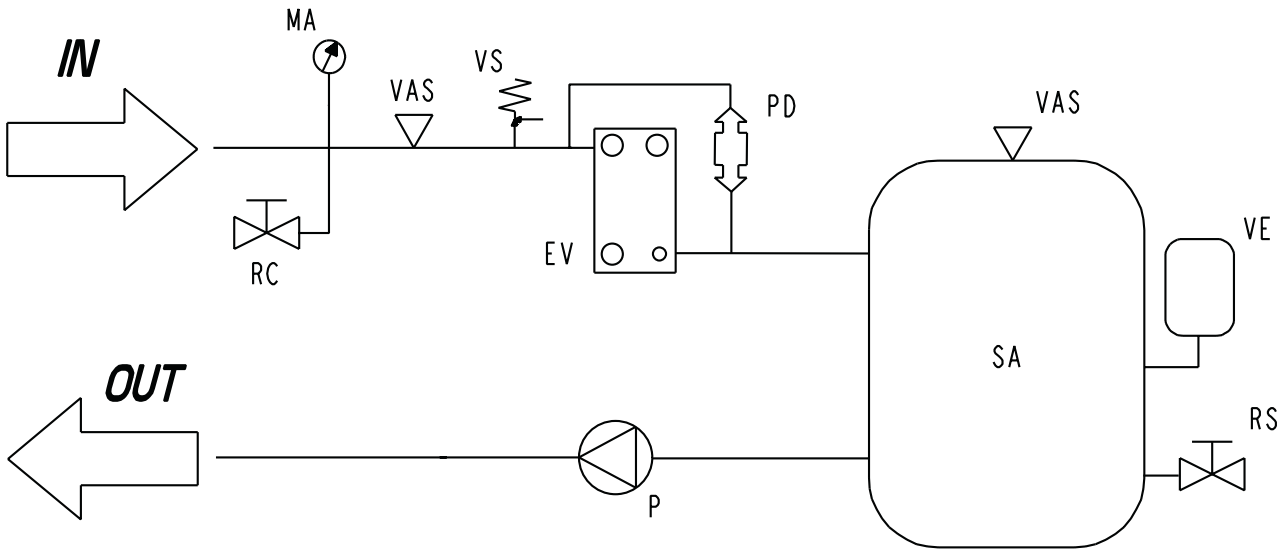

	LEGEND
VS	Safety valve
EV	Evaporator
PD	Water differential pressure switch
MA	Water gauge
VAS	Air bleed hole
VE	Expansion vessel
P	Pump
RS	Drain
RC	Water charge
VU	Check valve
SA	Buffer tank

All copying, even partial, of this manual is strictly forbidden

2 INSPECTION, CONVEYANCE DIMENSIONAL AND SITING

2.1 INSPECTION

On receiving the unit, check that the packing is intact: the machine left the factory in perfect conditions and after thorough inspection.
Should you detect any signs of damage, immediately report them to the carrier and note them on the delivery slip.
Galletti S.p.A. must be notified of the entity of the damage within 8 days of the delivery date.
Check that the following items are present:
- starting up module,
- wiring diagram,
- warranty certificate
- make sure that this manual is intact (36 pages)

2.2 CONVEYANCE

During handling it is compulsory to check dimensions, weights, centre of gravity and anchorages.
Check as well that lifting and positioning devices conform to the current safety regulations.
The unit leaves the factory screwed onto a wooden pallet, which allows it to be easily conveyed with a forklift truck.
After removing the unit from the pallet, handle it gently, without applying excessive pressure on the side panels, finned coil and fan grille.
You should collect and separate the packing materials (wood, cardboard, nylon etc.) and make them available for recycling in order to minimise their environmental impact.
Before lifting, remove the screws that fasten the machine base to the wooden pallet.
The unit must be lifted using Ø 1½" GAS steel pipes at least 3mm thick, to be inserted in the round holes on the base side members (see figure) and identified by means of stickers. Piping must protrude of at least 250-300 mm from each side, be slung with ropes of equal length and secured to the lifting hook (provide stops at the ends of the pipes to prevent the ropes from slipping off due to the weight).
Use ropes and belts sufficiently long to extend beyond the height of the machine and place spacer bars and boards on the top to prevent damaging the sides and the top of the unit. In this phase, before the definitive position, vibration damping supports can be installed (optional).
WARNING: In all lifting operations make sure that the unit is securely anchored in order to prevent accidental falls or overturning.

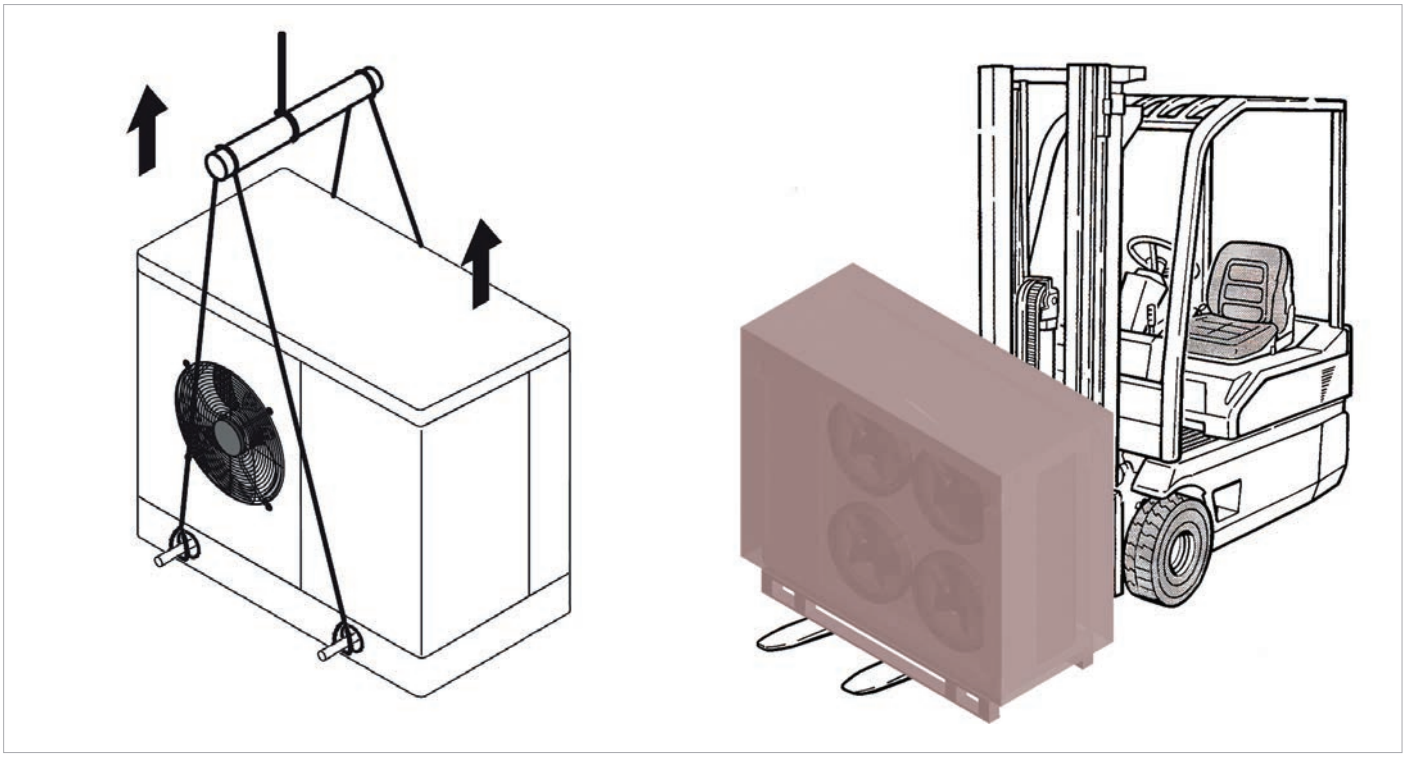

All copying, even partial, of this manual is strictly forbidden

2 INSPECTION, CONVEYANCE DIMENSIONAL AND SITING

2.3 DIMENSIONAL

MPI DC 08

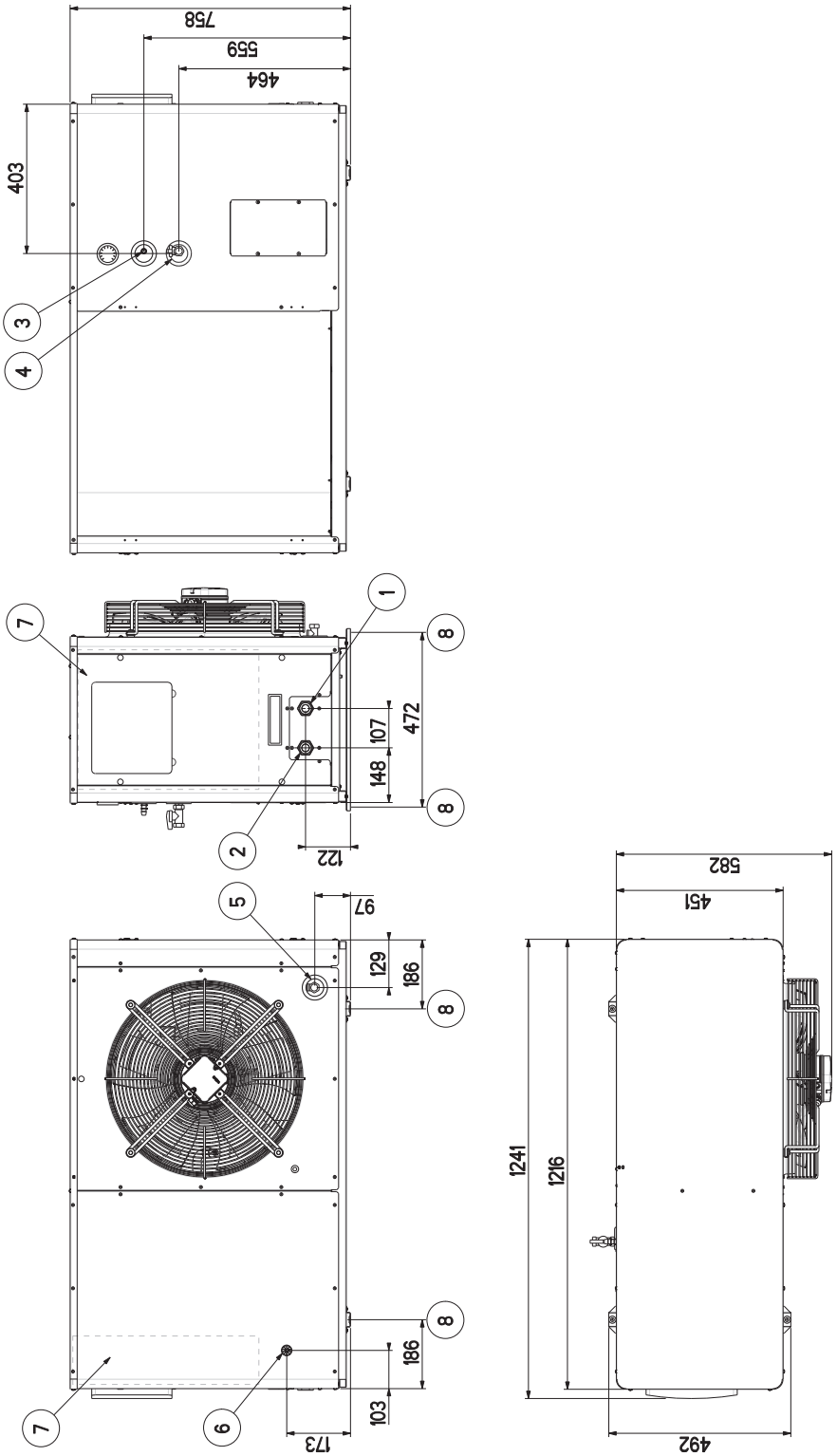

Legend:

1	Water in 1" female
2	Water out 1" female
3	Safety valve discharge outlet provided with rubber ring holder
4	Water supply 1/2" male (optional tap)
5	Drain manifold 1/2" female
6	Power supply Ø 28 mm
7	Electric control board
8	Dampers fastening points (accessory)

All copying, even partial, of this manual is strictly forbidden

2 INSPECTION, CONVEYANCE DIMENSIONAL AND SITING

2.3 DIMENSIONAL

MPI DC 10 - 18

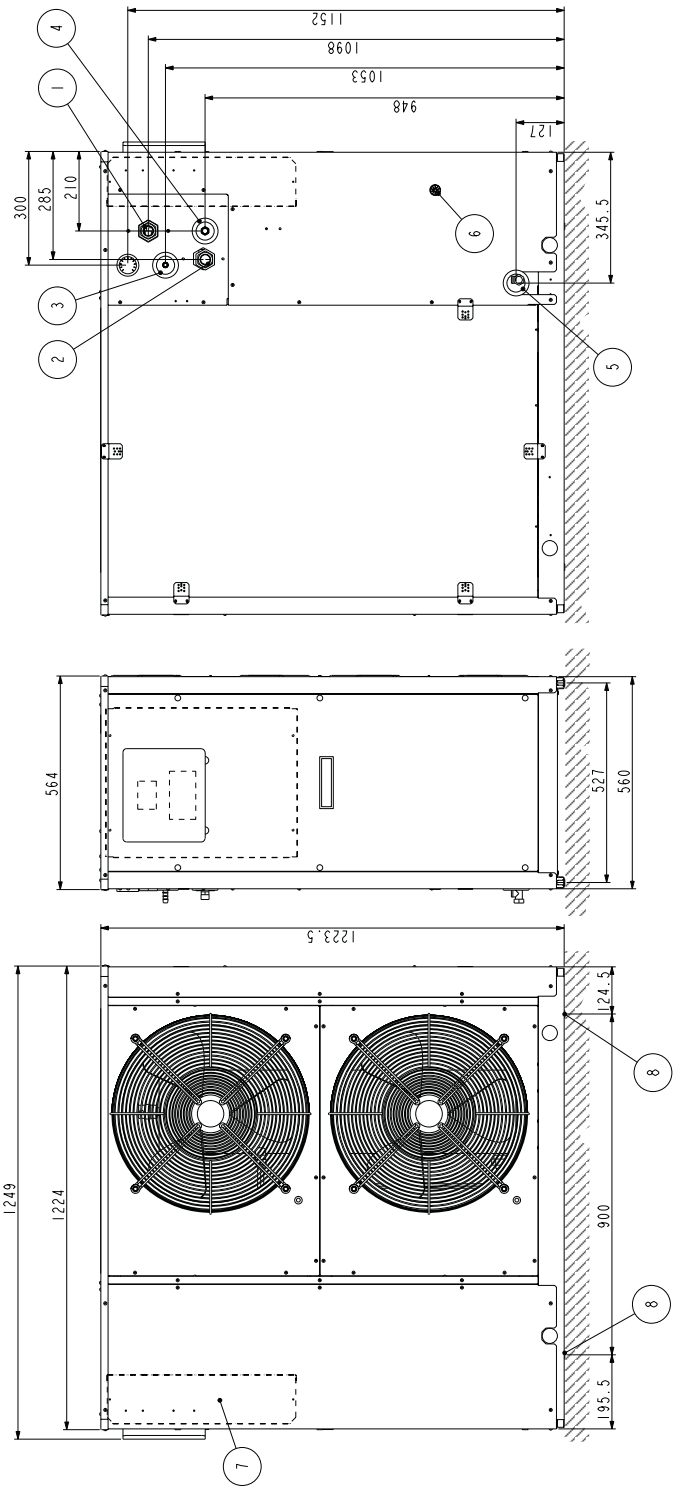

Legend:

1 Water in 1" $^1/_4$ female
2 Water out 1" $^1/_4$ female
3 Safety valve discharge outlet provided with rubber ring holder
4 Water supply $^1/_2$" male (optional tap)
5 Drain manifold $^1/_2$" female
6 Power supply ∅ 28 mm
7 Electric control board
8 Dampers fastening points (accessory)

All copying, even partial, of this manual is strictly forbidden

2 INSPECTION, CONVEYANCE DIMENSIONAL AND SITING

2.3 DIMENSIONAL

MPI DC 23 - 29

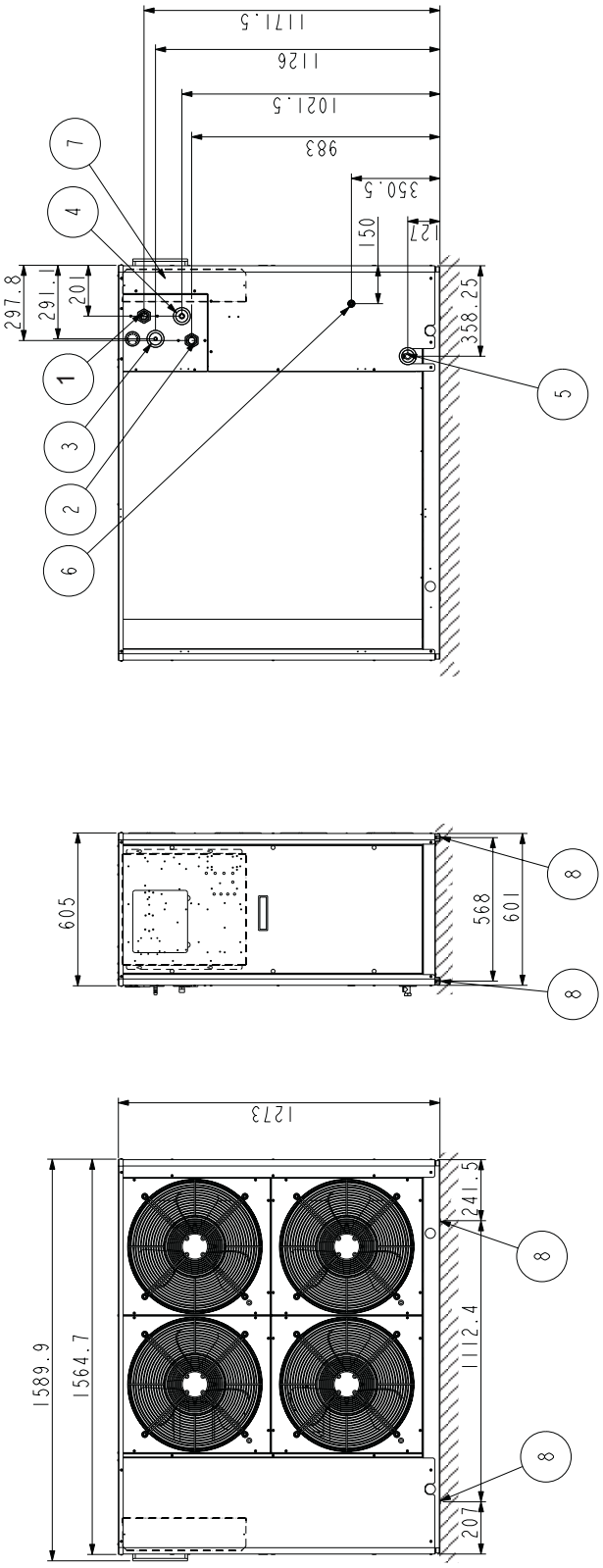

Legend:

1 Water in 1" $^1/_4$ female
2 Water out 1" $^1/_4$ female
3 Safety valve discharge outlet provided with rubber ring holder
4 Water supply $^1/_2$" male (optional tap)
5 Drain manifold $^1/_2$" female
6 Power supply ∅ 28 mm
7 Electric control board
8 Dampers fastening points (accessory)

All copying, even partial, of this manual is strictly forbidden

2 INSPECTION, CONVEYANCE DIMENSIONAL AND SITING

2.4 SITING

It is important to bear in mind the following aspects when choosing the best site for installing the unit:
- size and origin of water pipes;
- location of the power supply;
- solidity of the supporting surface;
- avoid obstacles to the outflow of air from the fan which could cause back suction (see section on "installation clearance requirements");
- Direction of prevalent winds: (position the unit so as to prevent prevalent winds from interfering with the fan air flow)
  Prevalent winds opposing the fan air flow will result in a maximum air temperature below the value indicated in the operating limits;
  Wind flowing in the same direction as the fan flow will result in a minimum air temperature above the value indicated in the operating limits.
  Even when the chiller is running in the heat pump mode, wind may have the effect of reducing the range of operation"
- avoid the possible reverberation of sound waves; do not install the unit in narrow or cramped spaces;
- ensure adequate accessibility for maintenance or repairs (see section on "installation clearance requirements").

This appliance is not intended to be used by children or persons with physical, sensorial or mental problems, inexpert or unprepared, without supervision. Be careful that children do not approach the appliance.

2.4.1 INSTALLATION CLEARANCE REQUIREMENTS

To guarantee the proper functioning of the unit and access for maintenance purposes, it is necessary to comply with the minimum installation clearance requirements shown in figures 1, 2 and 3.
Verify that there are no obstacoles in front of the fans air outlet.
Avoid any and all situations of backflow of hot air between air outlet and inlet of the unit.

If even only one of the above conditions is not fulfilled, please contact the manufacturer to check for feasibility.
In the design of the MPI series, special care has been taken to minimise noise and vibrations transmitted to the ground.
Even greater insulation may be obtained, however, by using vibration damping base supports (available as optional accessories).
If vibration damping base supports are adopted, it is strongly recommended also to use vibration damping couplings on the water pipes.
Whenever the unit is to be sited on unstable ground (various types of soil, gardens, etc.) it is a good idea to provide a supporting base of adequate dimensions.

Warning ⚠ heat pump units produce condensation while operating in the heating mode.

MPI DC 08

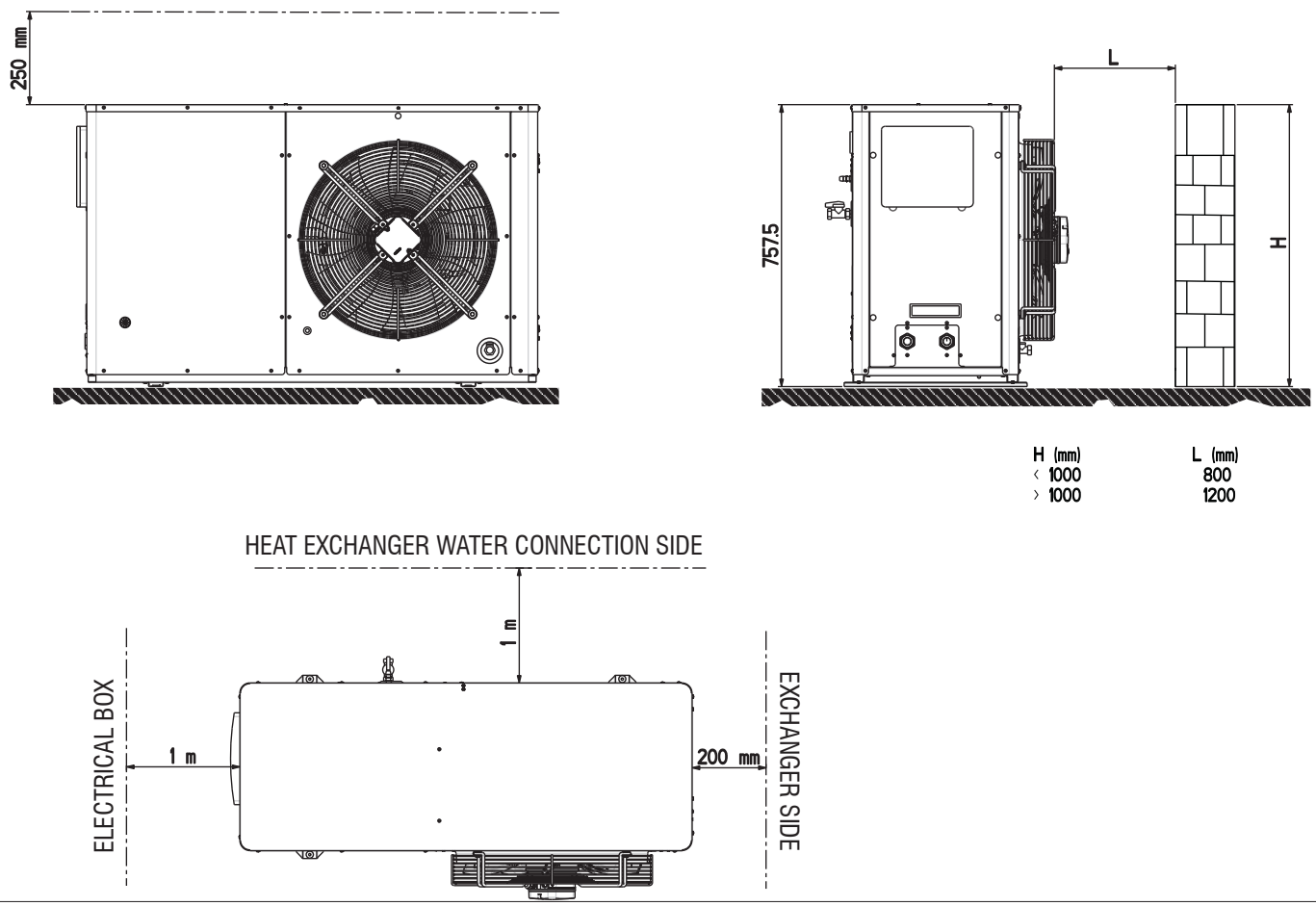

All copying, even partial, of this manual is strictly forbidden

2 INSPECTION, CONVEYANCE DIMENSIONAL AND SITING

2.4 SITING

2.4.1 INSTALLATION CLEARANCE REQUIREMENTS

MPI DC 10 - 18

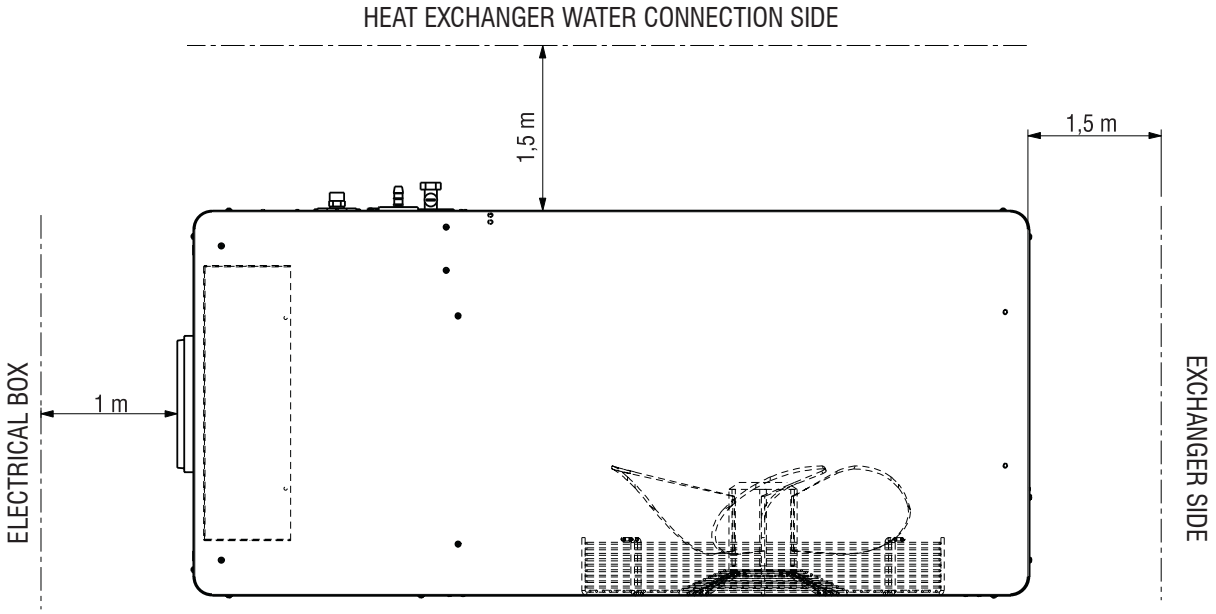

MPI DC 23 - 29

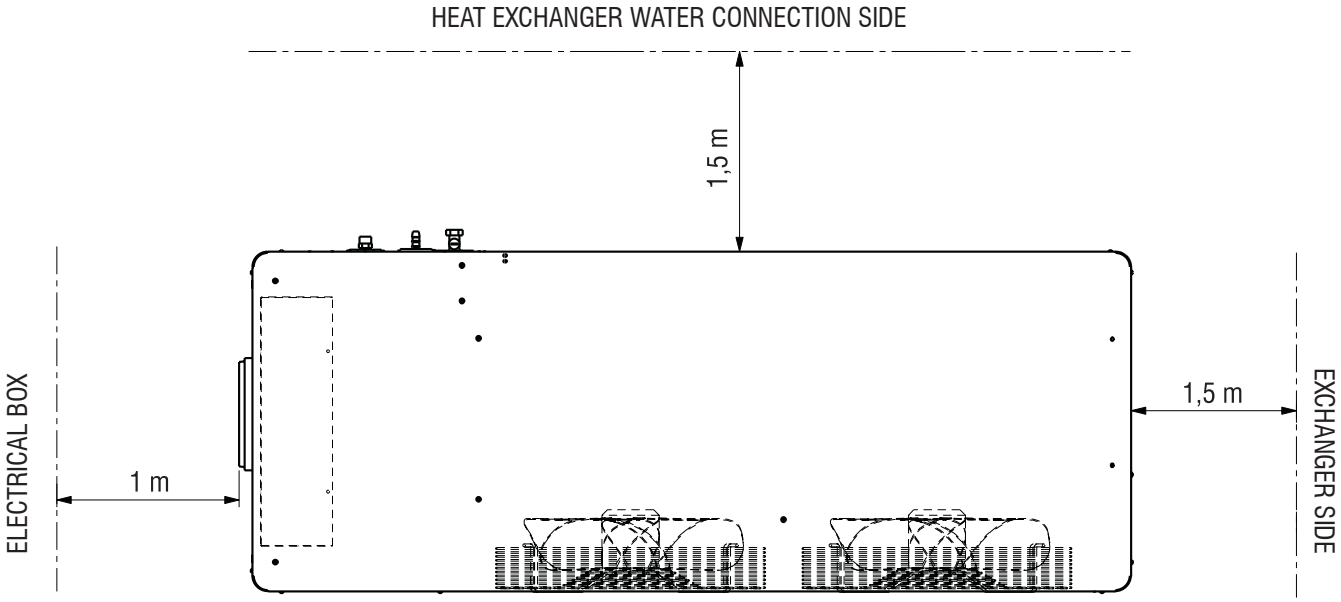

All copying, even partial, of this manual is strictly forbidden

2 INSPECTION, CONVEYANCE DIMENSIONAL AND SITING

2.5 DAMPERS SITING (ACCESSORY)

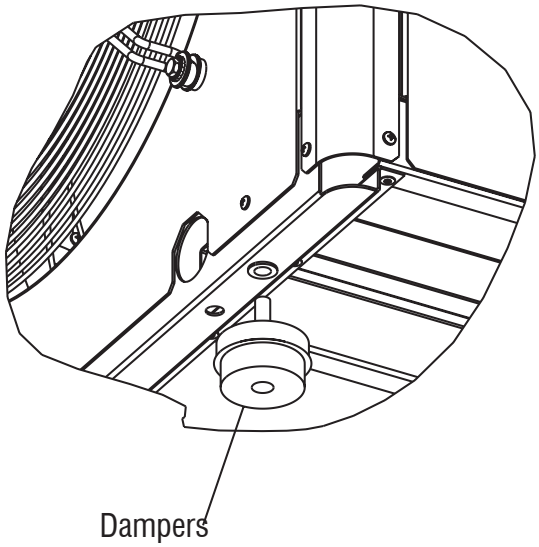

MPI DC	n° dampers
08 - 29	4

All copying, even partial, of this manual is strictly forbidden

3 PLUMBING AND ELECTRICAL CONNECTIONS

3.1 PLUMBING CONNECTION

All the units belonging to the MPI series are equipped with water differential pressure switch, safety valve, water pressure gauge and automatic filling device and emptying tap.
Furthermore, depending on the version, MPI units can be supplied complete with pump, expansion vessel and buffer tank:

3.1.1 HYDRAULIC CONNECTION

Warning ⚠ While connecting the taps, hold the unit's plumbing connections tightly in place using a hexagonal wrench to prevent the pipes inside the unit from being damaged (see figure).

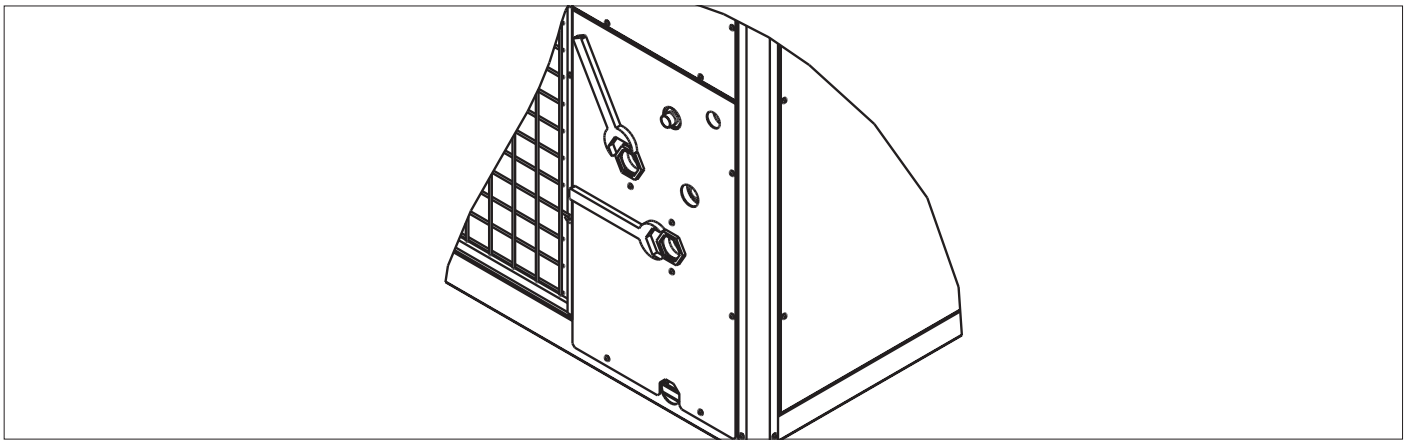

3.1.2 RECOMMENDED WATER CIRCUIT

Warning ⚠ when making the plumbing connections, make sure there are no open flames in proximity to or inside the unit.

When setting up the water circuit, it is advisable to equip it with:
- valves for regulating (VI) the unit on the water pipes, immediately upstream and downstream from the unit itself, to be used in the event maintenance work is required;
- standard mechanical filter (FM) (OBLIGATORY!) on the pipe feeding the unit, in proximity to the latter;
- standard mechanical filter (FM) (OBLIGATORY!) and check valve (VNR), on the supply line upstream from the filling tap (RC);
- an air vent valve at the highest point of the circuit;
- escape pipe for the safety valve (VS), which, in the event the safety valve opens, diverts the jet of water to an area where it cannot harm persons or damage property (Important!);
- vibration-damping couplings (GA) on the pipes to prevent vibrations from being transmitted toward the system.

Important! It is advisable to ensure that the pipes connected upstream and downstream from the unit are not smaller in diameter than the plumbing connections of the unit itself.

Important! During wintertime the water circuit (or the water chiller only) must be emptied to prevent damage caused by freezing; alternatively, the circuit may be filled with a mixture of water and glycol; the percentage of glycol necessary will depend on the lowest forecast temperature (see table):

Percentage by weight of ethylene glycol (%)	Mixture freezing temperature (°C)
0	0
10	-4
15	-8
20	-14
30	-18

Important! If different antifreeze product is to be used, please contact the manufacturer.

Failure to install filters and vibration dampers may cause problems of clogging, breakages and noise, for which the manufacturer may not be held liable.

All copying, even partial, of this manual is strictly forbidden

3 PLUMBING AND ELECTRICAL CONNECTIONS

3.1 PLUMBING CONNECTION

3.1.2 RECOMMENDED WATER CIRCUIT

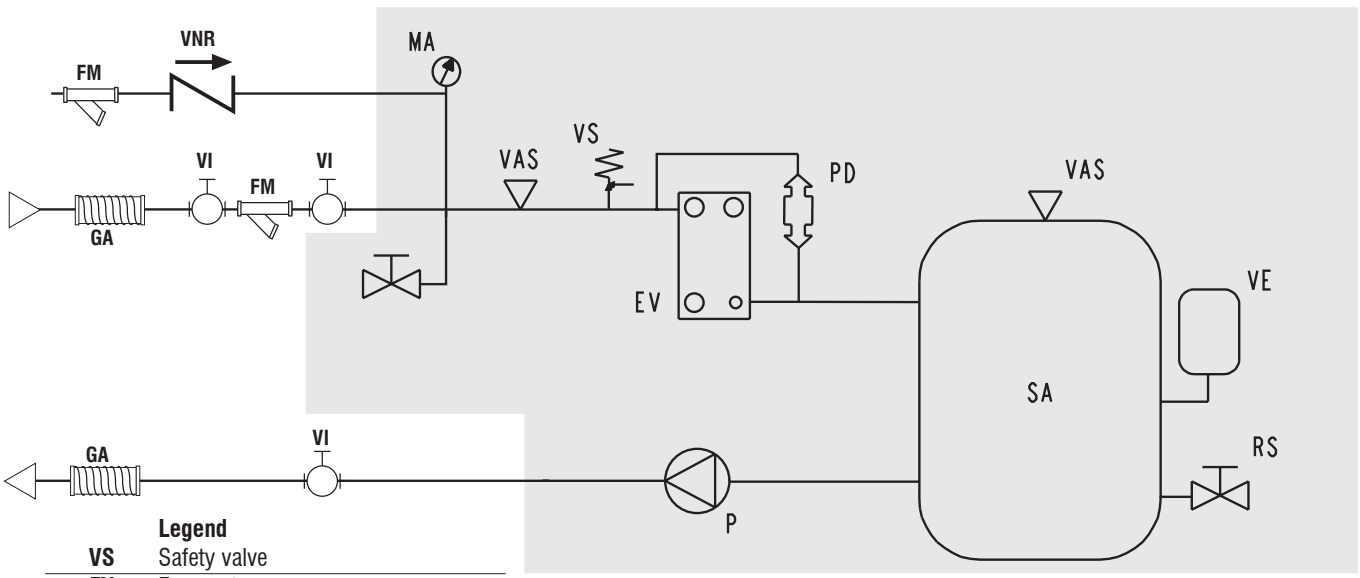

	Legend
VS	Safety valve
EV	Evaporator
PD	Water differential pressure switch
MA	Water gauge
VAS	Air bleed hole
SA	Storage tank
VE	Expansion vessel
RS	Drain
RC	Water charge
VI	Regulation valve (not supplied)
GA	Vibration-damping coupling (not sup plied)
FM	Mechanical filter (OBLIGATORY)
VNR	Check valve (not supplied)

3.1.3 FILLING THE SYSTEM

- Before you start filling, make sure that the system drainage cock is closed.
- Open all the air vent valves of the system and of the indoor units and chiller.
- Open the system regulating devices.
- To fill the circuit open slowly the water tap of the system (optional).
- When water starts coming out of the air vent valves of the indoor units, close them and continue filling until the pressure gauge reading is 1.5 bars.

3 PLUMBING AND ELECTRICAL CONNECTIONS

3.2 ELECTRICAL CONNECTIONS

Warning ⚠ the EMC filters connected to frequency converters (inverters) can create leakage currents toward ground (in order to make the unit EMC compliant, by reducing conducted emissions on power supply line). Depending on installation site, this can force the cut out of the differential safety switch. It is recommended to install a separate differential safety switch, only for the BLDC unit, with an adjustable threshold for the cut out current.

All operations must be performed by qualified service personnel in accordance with current laws and regulations. For any electrical work on the unit, refer to the electric diagrams supplied with the unit.

It is recommended to make sure that:

- The characteristics of the mains power supply are adequate for the electrical inputs specified in the table of electrical data.

Warning ⚠ Before carrying out any job on electrical parts, make sure the power supply is disconnected.

Check that the mains electricity supply is compatible with the specifications (voltage, number of phases, frequency) shown on the unit rating plate.
The supply voltage may not undergo fluctuations exceeding ±5% of the rated voltage.
The electrical connections must be made in accordance with the wiring diagram provided with the unit and the regulations in force.

Warning ⚠ Never attempt to modify internal electrical connections: any undue modifications will immediately invalidate the warranty.

Important! An all-pole circuit breaker must be used on the electric panel upstream, conform to IEC Standards (contacts must be open at least of 3 mm), with suitable interruption capacity and differential protection, according to the electrical data table described below, and installed as close as possible to the device. For the machine power supply line, use H07RN-F rubber flexible cables, with section as indicated in the table. For the cable passage, use sheaths and channels suitable for outdoor installation. Provide a line switch and delayed-type fuses with features as indicated in the table.

All copying, even partial, of this manual is strictly forbidden

To access the electric control board it is necessary to remove the inspection panel (figure 4) by taking out the screws; introduce the power cable into the unit through the bushing on the side panel; then bring it to the electric control board through the cable holder provided.

Important! Tighten the wires securely to the terminals and clamp the cable in place with the cable holder (figure 5).

Important! To preserve the protection degree of the machine, use a cable gland compatible with the sheath or power cable diameter, in correspondence to the unit side panel hole.

Important! An earth connection is mandatory: connect the earth cable to the appropriate terminal of the electric panel (refer to the electric panel layout provided with the unit) and marked with: ⏚

Important! If you wish to include:
- a remote on/off switch
- a remote switch for changing over between the cooling and heating mode (**MPI DC H** only),
- a remote alarm indicator

it is a good idea to do so at this stage of the installation procedure, by connecting the switches or PCDS remote control (accessory) to the electric control board terminals as directed in section 3.3 and using the unit wiring diagram as your reference.

MPI DC		08 M	010 M	014	018	023	029
Power cables	mm²	4	4	6	6	10	10
Safety fuse **F**	A	20	20	25	25	32	32
Circuit breaker **IL**	A	20	20	25	25	40	40

4

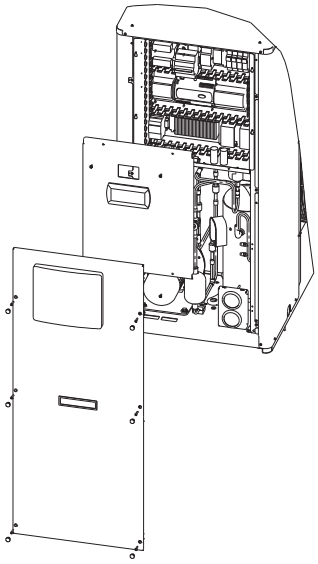

5

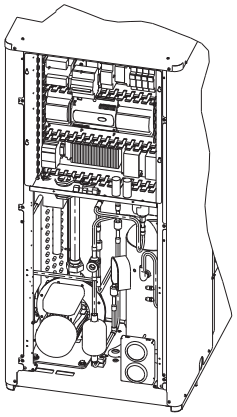

3.3 ELECTRICAL DATA

MPI DC		08 M	010 M	014	018	023	029
Maximum power input	kW	4,1	5,6	7,1	10,7	10,8	21,9
Maximum current absorption	A	16	26,6	20	22	28,5	43
Starting absorbed current	A	10	10	10	10	10	10
Fan motor rated power	kW	0,24	0,14	0,14	0,14	0,14	0,14
Fan motor rated current	A	1,03	0,64	0,64	0,64	0,64	0,64
Pump motor rated power	kW	0,14	0,48	0,65	0,65	0,65	0,65
Pump motor rated current	A	0,58	2,7	3	3	3	3
Power supply	V/f/Hz	230/1/50		400/3N/50			
Auxiliary power supply	V/f/Hz	230/1/50					
Power cables	mm²	4	4	6	6	10	10
PCD connecting cables	mm²	AWG22	AWG22	AWG22	AWG22	AWG22	AWG22
PCDS connecting cables	mm²	1	1	1	1	1	1
Safety fuse F	A	20	20	25	25	32	32
Circuit breaker IL	A	20	20	25	25	40	40

- The maximum input power is the mains power that must be available in order for the unit to work.
- The maximum current absorption refers to the current that will trigger the internal safety devices of the unit. It is the maximum current allowed in the unit.This value may never be exceeded; it must be used as a reference for determining the size of the power supply line and the related safety devices (refer to the wiring diagram supplied with the units).

All copying, even partial, of this manual is strictly forbidden

3 PLUMBING AND ELECTRICAL CONNECTIONS

3.3 ELECTRICAL DATA

MAIN ELECTRICAL CONNECTION OF THE ONE-PHASE AND THREE-PHASE UNITS

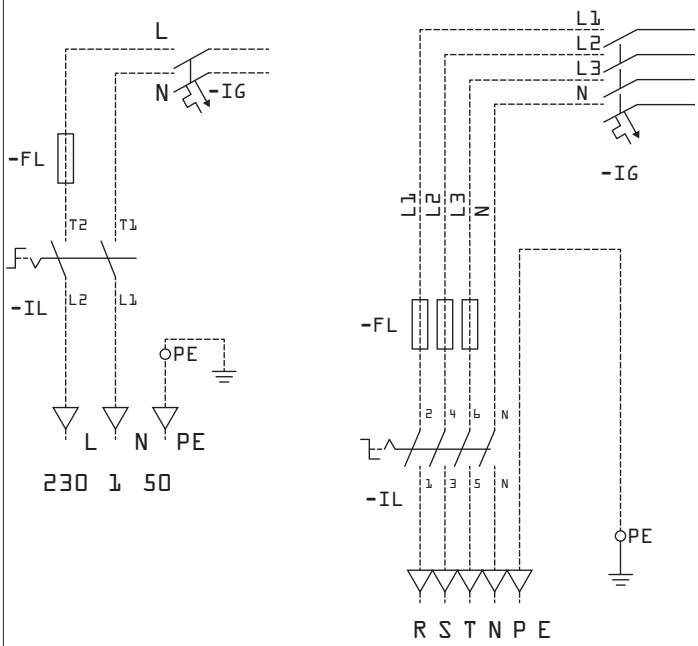

DIAGRAM SHOWING ELECTRICAL CONNECTIONS MPI DC WITH MYCHILLER REMOTE CONTROL

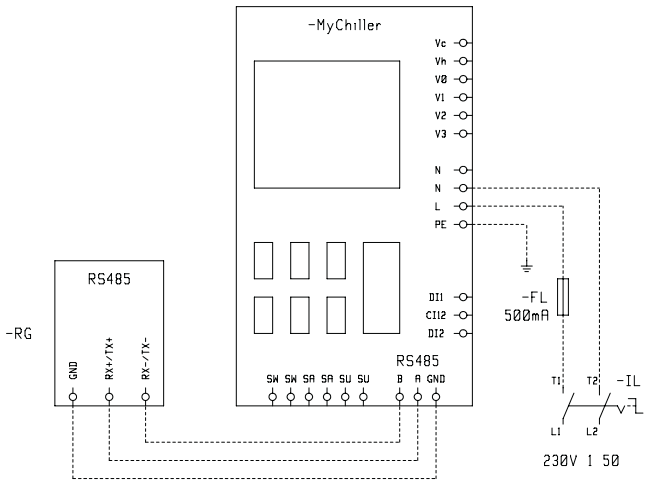

DIAGRAM SHOWING ELECTRICAL CONNECTIONS BETWEEN MPI DC AND PCDS REMOTE CONTROL PANEL

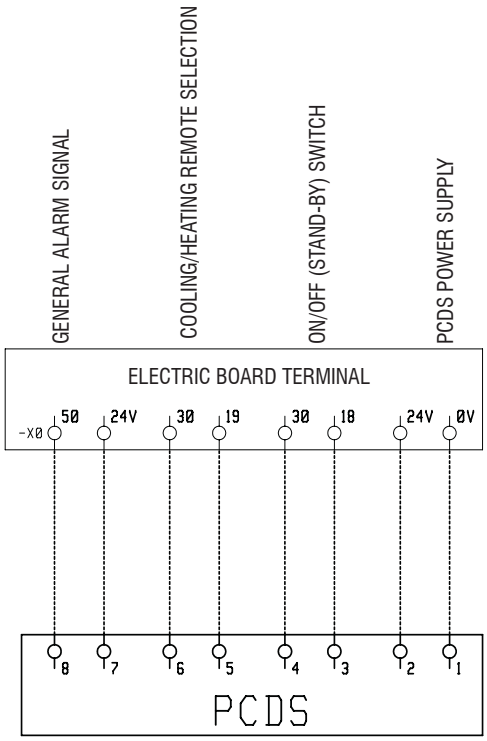

Note: On the terminal block of the electric control panel a voltage of 24V will be present at the 50/24V terminals in the event of an alarm; if it is desired to interface with a voltage-free contact, a relay must be applied for this purpose by the installer.

All copying, even partial, of this manual is strictly forbidden

4 STARTING UP

THE FIRST START UP MUST BE CARRIED OUT EXCLUSIVELY BY QUALIFIED PERSONNEL AND AUTHORIZED BY GALLETTI SPA (SEE WARRANTY SHEET ATTACHED).

At first start-up of the installation make sure to comply with current national regulations.

4.1 PRELIMINARY CHECKS

When starting up the unit for the first time or after a seasonal period of quiescence, it is advisable to have the following checks performed by specialised personnel:

- Check that the electrical connections have been made properly and that all the terminals are securely tightened.
- Check that the external power supply is within +-5 % tolerance from the power supply reported on the unit identification label.
  If the power supply is subject to frequent voltage fluctuations, contact Galletti S.p.A. for advice on choosing suitable protections.
- Check for refrigerant leaks, with the aid of a leak detector if necessary.
- Check that the plumbing connections have been properly made according to the indications given on the plates to be found on the unit itself (water inlet, water outlet etc.).
- Make sure that the pump is not blocked.
- Make sure that the water circuit is duly bled to completely eliminate the presence of air: load the circuit gradually and open the air vent valves, which the installer should have set in place.

Warning ⚠ before starting the unit, make sure all the covering panels are in place and secured with the fastening screws provided.

To start the unit, move the main switch to on. Use the keypad of the electronic control as directed in section 3.3 to select the cooling or heating mode.

Warning ⚠ You should not disconnect the unit from the power supply during periods when it is inoperative but only when it is to be taken out of service for a prolonged period (e.g. at the end of the season).
To turn off the unit temporarily follow the directions provided in section 3.3.

Warning ⚠ do not cut off power using the main switch:
the latter device serves to disconnect the unit from the electricity supply when there is no passage of current, i.e. when the unit is already turned OFF.

All copying, even partial, of this manual is strictly forbidden

5 MICROPROCESSOR CONTROL (SEE USER MANUAL)

6 OPERATING LIMITS

The graphs below illustrate the operating limits of **MPI** units (in the case of continuous operation) in relation to the outlet water temperature and outdoor air temperature.

Operating limits	Chiller		Heat pump	
	min	max	min	max
Inlet water temperature (°C)	8	20 [1]	25	42
Outlet water temperature (°C)	5	15	28	58 [2]
Thermal differential of water (°C)	3	8	3	8
Outdoor air temperature (°C)	-10 [3]	48	-10	35

1 For transitory periods (e.g. equipment start up) values up to 25 °C are allowed
2 Value that may be reached only for outdoor air temperatures exceeding 0°C.
3 With condensation control: Outdoor air T min -15 °C

Warning ⚠ The units are designed to work with water and air temperatures falling within the range defined by the operating limits. Attempting to operate the units beyond these limits could cause irreparable damage to the units themselves.

6.1 OPERATING LIMITS IN CHILLER MODE

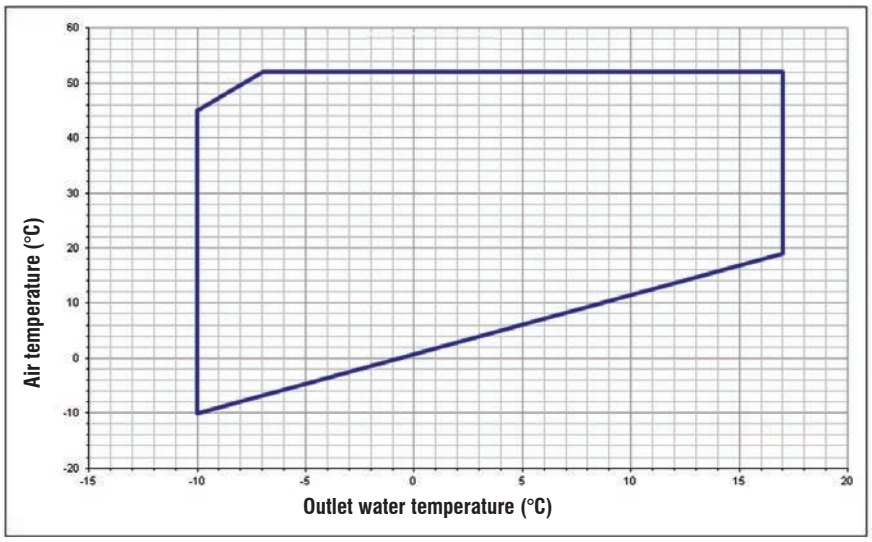

6.2 OPERATING LIMITS IN HEAT PUMP MODE

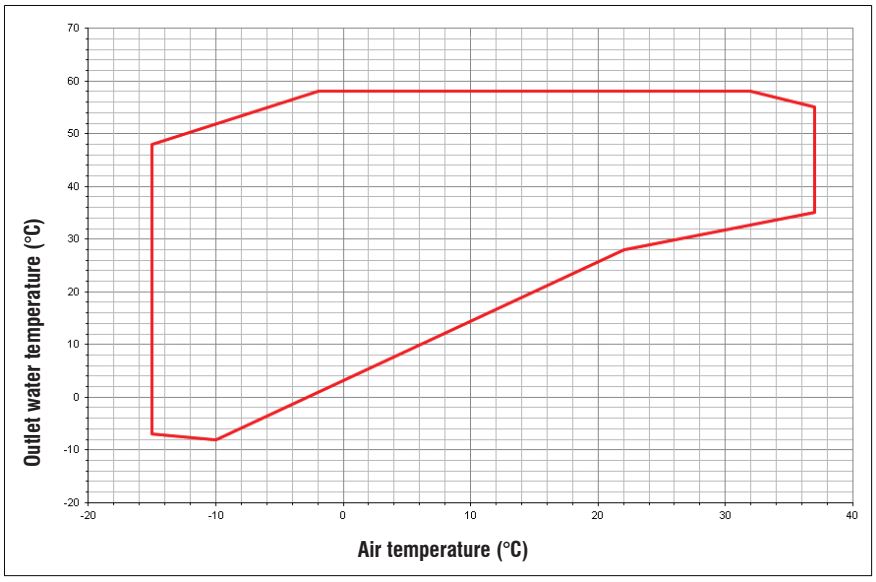

All copying, even partial, of this manual is strictly forbidden

6.3 THERMAL CARRYING FLUID

The units belonging to the **MPI DC** series can work with mixtures of water and up to 30% ethylene glycol.

7 CONTROL AND SAFETY DEVICES

All the control and safety devices are set and tested in the factory before the unit is dispatched.

7.1 CONTROL DEVICES

7.1.1 Service thermostat

The service thermostat controls the compressor according to the demand for chilled water (cooling mode) or heated water (heat pump mode), as determined by a sensor installed on the water exchanger outlet. This device is governed by the microprocessor control.

7.1.2 CONTROL DEVICE SETTINGS

Control devices		Set point	min	max	differenzial
Service thermostat (outlet water temp. cooling mode)	°C	7	5	15	2
Service thermostat (outlet water temp. heat pump mode)	°C	45	25	53	2

7.2 SAFETY DEVICES

7.2.1 HIGH PRESSURE SWITCH

The high pressure switch stops the compressor when the delivery pressure exceeds the set value.

7.2.2 LOW PRESSURE SWITCH

The low pressure switch stops the compressor when the intake pressure falls below the set value.

7.2.3 ANTIFREEZE THERMOSTAT

The antifreeze thermostat situated at the evaporator outlet performs a dual function: it prevents ice from forming in the evaporator in the event of an excessive decrease in the water flow.
This device is governed by the microprocessor control (see also the chapter regarding the microprocessor).

7.2.4 WATER DIFFERENTIAL PRESSURE SWITCH

The water differential pressure switch stops the unit in the event of an excessive reduction in the water flow, thus protecting it from the formation of ice (chiller operation) and excessively high condensation temperatures (heat pump operation).

7.2.5 WATER SAFETY VALVE

The water safety valve opens when the pressure within the water circuit reaches a level that may cause damage to the unit.

7.2.6 SAFETY DEVICE SETTINGS

Safety device	activation	differential	resetting
Maximum pressure switch (bars)	42		Automatic
Minimum pressure switch (bars)	2		Automatic
Antifreeze thermostat (°C)	4	3	Manual
Water differential pressure switch (bars)	0,050	0	Automatic
Water safety valve (bars)	4		

All copying, even partial, of this manual is strictly forbidden

8 ROUTINE MAINTENANCE AND CHECKS

It is recommended to carry out periodic checks of the safety devices (pressure switches and safety valves) and verify the absence of refrigerant leaks. After the first start-up, the periodic checks must be carried out in conformity with the schedule and the manners provided for by current national regulations.
To keep the unit in good working order and guarantee the expected levels of performance and safety, it is necessary to carry out some periodic routine checks: some may be performed directly by the user while others must be carried out solely by specialised personnel.

8.1 CHECKS TO BE PERFORMED BY THE USER

The checks and operations described in this section may be easily performed by the user, provided that the latter shows a minimum of attention.
- Remove any dirt that has built up around the coil or objects trapped in the mesh protecting the coil itself (leaves, paper etc., to be carried out monthly).

Warning ⚠ Be especially careful when working in proximity to finned coils since the aluminium fins are extremely sharp and can cause cuts.

- Check the level of water in the circuit using the water pressure gauge, which should indicate a pressure of about 1.5 bars (monthly).
- Check that the escape pipe of the water safety valve is tightly secured.
- Check the water circuit for leaks (monthly).
- If the unit is to remain out of service for a long time, drain the water (or other fluid present in the circuit) from the pipes and the unit itself.
  This is indispensable if during the period of quiescence the ambient temperature is expected to fall below the freezing point of the fluid used (seasonal operation).
  Drain the unit and parts of the circuit subject to the risk of freezing by opening the RS (optional) emptying tap.
  Before placing the unit back in service at the start of the season, refill the water circuit as directed in section 1.4
- Check that the noise emissions of the unit are regular (monthly).
- If necessary, release the pump rotor .

8.2 CHECKS AND MAINTENANCE TO BE PERFORMED BY SPECIALISED PERSONNEL

Warnings

Important! All the operations described in this section MUST ALWAYS BE PERFORMED BY QUALIFIED PERSONNEL.

Warning ⚠ Before carrying out any work on the unit or accessing internal parts, make sure you have disconnected it from the mains electricity supply.

Warning ⚠ The upper part of the compressor casing and the outlet pipe reach high temperatures. Be especially careful when working in their vicinity.

Warning ⚠ Be especially careful when working in proximity to the finned coils: the aluminium fins are extremely sharp and can cause cuts.

Warning ⚠. **Never attempt to access internal parts of the unit without having first disconnected it from the power supply. Wait for at least 5 more minutes before opening the unit.**

Warning ⚠ The components of the power unit of the frequency converter are live when connected to mains potential. Coming into contact with this voltage is extremely dangerous and may cause death or severe injury. The control unit is isolated from the mains potential.

Warning ⚠ Do not perform any voltage withstand tests.

Warning ⚠ The heat sink of types MF2 and MF3 may be hot when the frequency converter is in use. Coming into contact with the heat sink may cause burns.

Warning ⚠ Do not perform any voltage withstand tests

Important! After completing maintenance jobs, always replace the panels enclosing the unit and secure them with the fastening screws provided.

The checks and operations described in this section must be carried out on a yearly basis by specialised personnel.
- Check the electric control board terminals to ensure that they are securely tightened: the movable and fixed contacts of the circuit breakers must be periodically cleaned and replaced whenever they show signs of deterioration.
- Check the compressor and pipes for oil leaks.
- Check the efficiency of the water differential pressure switch.
- Clean the metal filters mounted in the water pipes.
- Clean the finned coil by aiming a jet of compressed air in a direction opposite to the outflow of air, taking care not to bend the fins.

All copying, even partial, of this manual is strictly forbidden

9 RETIRING THE UNIT

When the unit has reached the end of its working life and needs to removed and replaced, a series of operations should be carried out:

- the refrigerant gas it contains should be recovered by specialised personnel and sent to a waste collection facility;
- the lubricating oil in the compressor should also be recovered by specialised personnel and sent to a waste collection facility;
- if they cannot be reused, the framework and components should be scrapped and separated according to the type of material: this applies especially for the considerable quantities of copper, aluminium and steel present in the unit.

This will make the job of waste collection, disposal and recycling facilities easier and minimise the environmental impact of the dismantling.

Installation and maintenance should be carried out by technical personnel qualified for this type of machine, in compliance with current safety regulations.
When receiving the unit please check its state verifying if any damage occurred during the transport.
For installation and use of possible accessories please refer to the pertinent technical sheets.

10 TECHNICAL FEATURES

10.1 WATER CHILLERS RATED TECHNICAL DATA

MPI DC - C		010 M	014	018	023	029
Power supply	V - ph - Hz	230-1-50	400-3N-50	400-3N-50	400-3N-50	400-3N-50
Rated cooling capacity	kW	10,6	14,3	18,2	22,9	29,1
Total power input	kW	3,35	4,78	7,63	7,77	12,3
EER (rated capacity)		3,16	2,99	2,39	2,95	2,37
Total power input with pump	kW	3,6	5,3	8,2	8,3	12,9
Maximum power input	kW	5,6	7,1	10,7	10,8	21,9
Maximum electrical input	A	26,6	20,0	22,0	28,5	43,0
Starting current	A	10	10	10	10	10
No. of compressors / circuits		1 / 1	1 / 1	1 / 1	1 / 1	1 / 1
Refrigerant charge	kg	3,5	4,1	4,1	5,7	5,7
Low / high pressure switch	bar	42 / 2	42 / 2	42 / 2	42 / 2	42 / 2
No. of axial fans		2	2	2	4	4
Air flow rate	m^3/h	6.939	6.939	6.939	11.438	11.438
Water flow	l/s	1826	2454	3132	3935	4992
Diameter of water connections	“	1 1/4	1 1/4	1 1/4	1 1/4	1 1/4
Pressure drop, water side	kPa	23	35	35	36	36
Available head	kPa	130	120	120	98	98
Water content, excluding optionals	dm^3	3,0	3,0	3,0	5,0	5,0
Expansion tank	dm^3	5	5	5	5	5
Buffer tank	dm^3	30	30	30	50	50
Height	mm	1250	1250	1250	1300	1300
Length	mm	1220	1220	1220	1565	1565
Depth	mm	560	560	560	600	600
Sound power level	dB(A)	70	71	71	74	74
Sound pressure level	dB(A)	42	43	43	46	46
Transport weight *	kg	210	210	210	285	285
Operating weight *	kg	235	235	235	335	335

* Weights referred to version including pump and buffer tank
- Performance declared in accordance with the requirements of UNI EN 14511
- Cooling capacity: outdoor air temperature 35°C, water temperature 12°C / 7°C
- Sound power level measured according to standards ISO 3741 - ISO 3744 and EN 29614-1
- Sound pressure level measured at a distance of 10 m and a height of 1.5 m above the ground in a free field (fan side).
- The maximum electrical input is the mains electricity that must be available in order for the unit to work.
- The maximum current absorption refers to the current that will trigger the internal safety devices of the unit. It is the maximum current allowed in the unit. This value may never be exceeded; it must be used as a reference for determining the size of the power supply line and the related safety devices (refer to the wiring diagram supplied with the units).

All copying, even partial, of this manual is strictly forbidden

10 TECHNICAL FEATURES

10.2 HEAT PUMPS RATED TECHNICAL DATA

MPI DC - H		008 M	010 M	014	018	023	029
Power supply	V-ph-Hz	230-1-50	230-1-50	400-3N-50	400-3N-50	400-3N-50	400-3N-50
Rated cooling capacity	kW	7,96	10,4	14,0	17,9	22,5	28,5
Total power input	kW	2,62	3,35	4,78	7,63	7,77	12,3
EER (rated capacity)		3,04	3,10	2,93	2,35	2,90	2,32
Total power input with pump	kW	2,8	3,6	5,3	8,2	8,3	12,9
Rated heating capacity	kW	8,89	11,5	15,7	21,6	24,6	33,7
Total power input in heating mode	kW	2,81	3,56	4,96	7,48	7,86	11,7
COP (rated power)		3,16	3,23	3,17	2,89	3,13	2,88
Total power input with pump in heating mode	kW	3,0	4,1	5,5	8,0	8,4	12,3
Maximum power input	kW	4,1	5,6	7,1	10,7	10,8	21,9
Maximum electrical input	A	16	26,6	20,0	22,0	28,5	43,0
Starting current	A	10	10	10	10	10	10
No. of compressors / circuits		1 / 1	1 / 1	1 / 1	1 / 1	1 / 1	1 / 1
Refrigerant charge	kg	2,1	4,1	4,4	4,4	6,0	6,0
Low / high pressure switch	bar	42 / 2	42 / 2	42 / 2	42 / 2	42 / 2	42 / 2
No. of axial fans		1	2	2	2	4	4
Air flow rate	m^3/h	4680	6939	6.939	6.939	11.438	11.438
Water flow rate in cooling mode	l/s	1367	1.789	2.407	3.072	3.861	4.898
Water flow rate in heating mode	l/s	1545	1.974	2.727	3.752	4.273	5.853
Diameter of water connections	“	1 1/4	1 1/4	1 1/4	1 1/4	1 1/4	1 1/4
Water pressure drop (cooling)	kPa	6	22	33	33	34	34
Water pressure drop (heating)	kPa	7	23	36	36	40	40
Available head (cooling)	kPa	93	130	120	120	98	98
Available head (heating)	kPa	95	120	110	110	80	80
Water content, excluding optionals	dm^3	2	3	3	3	5	5
Expansion tank	dm^3	1	5	5	5	5	5
Buffer tank	dm^3	19,5	30	30	30	50	50
Height	mm	758	1250	1250	1250	1300	1300
Length	mm	1241	1220	1220	1220	1565	1565
Depth	mm	582	560	560	560	600	600
Sound power level	dB(A)	68	70	71	71	74	74
Sound pressure level	dB(A)	40	42	43	43	46	46
Transport weight *	kg	144	220	220	220	300	300
Operating weight *	kg	153	240	240	240	347	347

* Weights referred to version including pump and buffer tank
- Performance declared in accordance with the requirements of UNI EN 14511
- Cooling capacity: outdoor air temperature 35°C, water temperature 12°C / 7°C
- Heating capacity: outdoor air temperature 7°C dry bulb and 6.2°C wet bulb, water temperature 40°C/45°C
- Sound power level measured according to standards ISO 3741 - ISO 3744 and EN 29614-1
- Sound pressure level measured at a distance of 10 m and a height of 1.5 m above the ground in a free field (fan side).
- The maximum electrical input is the mains electricity that must be available in order for the unit to work.
- The maximum current absorption refers to the current that will trigger the internal safety devices of the unit. It is the maximum current allowed in the unit. This value may never be exceeded; it must be used as a reference for determining the size of the power supply line and the related safety devices (refer to the wiring diagram supplied with the units).

All copying, even partial, of this manual is strictly forbidden

11 COOLING CIRCUITS

Legend

N°	COMPONENT	SYMBOL
1	Compressor	
2	Evaporator	
3	Condensator	
4	Thermostatic valve	
5	Electrical fan	
6	Filter	
7	Sight glass	
8	Solenoid valve	
9	High pressure switch	
10	Low pressure switch	
11	High pressure gauge	
12	Low pressure gauge	
13	Service connection	
14	Diff. pressure switch	D
15	Check valve	
16	4 Way diversion valve	
17	Liquid separator	
18	Liquid receiver	
19	Pressure transducer	P
20	Liquid distributor	
21	Oil pressure switch	PO
22	Desuperheater	
23	Shut-Off valve	
24	Pocket	
25	Security valve	
26	Fusible plug	
27	Flow switch	F
28	Restrictor	
29	Electronic expansion valve	E

All copying, even partial, of this manual is strictly forbidden

11 COOLING CIRCUITS

11.5 COOLING ONLY UNIT

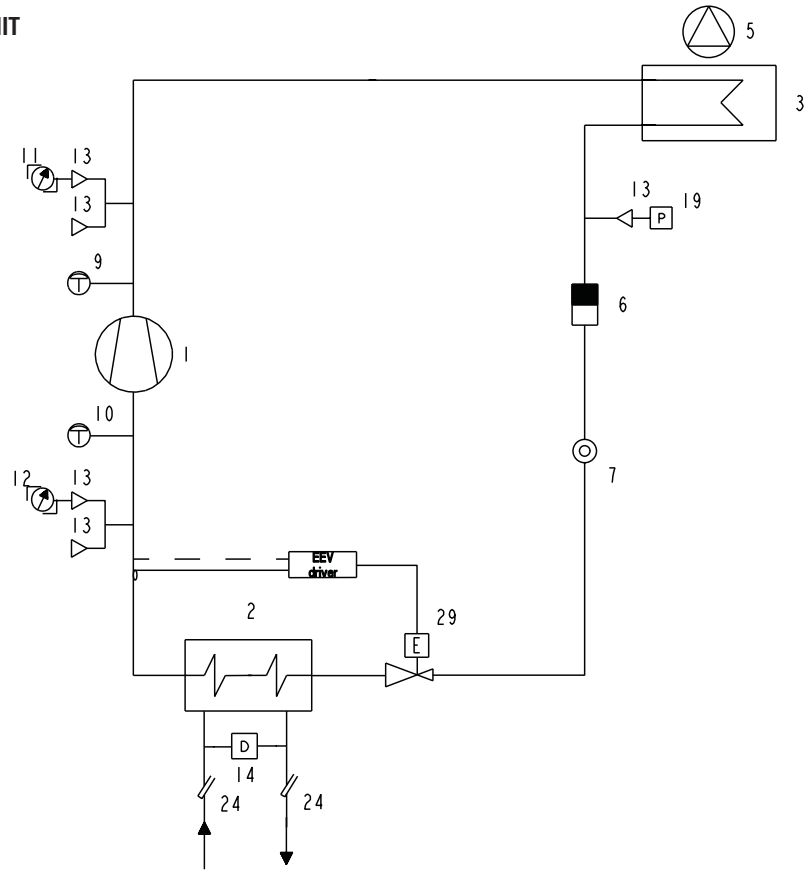

11.6 HEAT PUMP UNIT

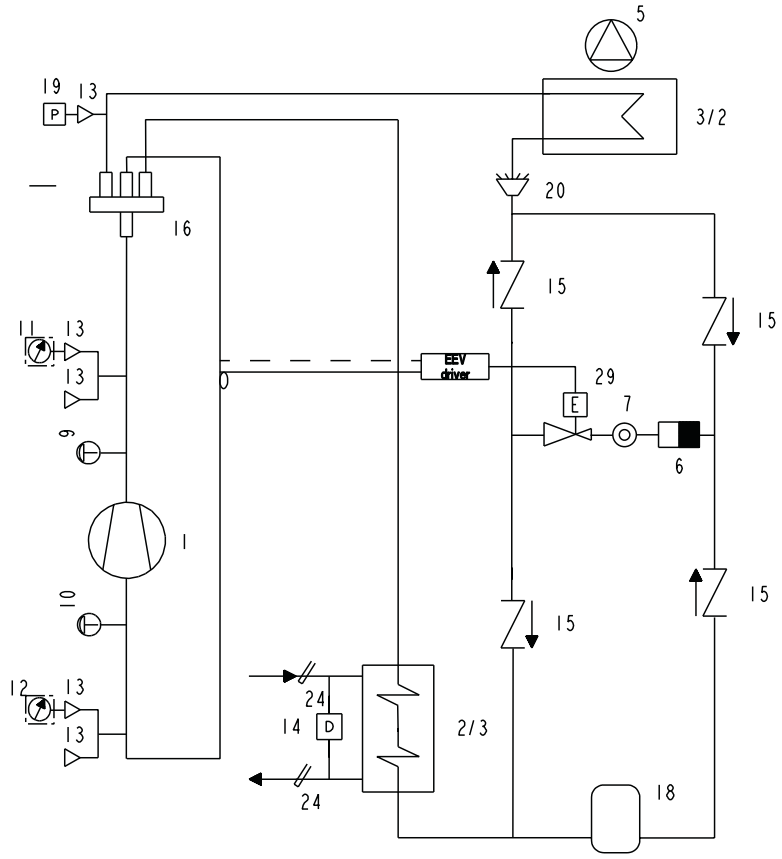

All copying, even partial, of this manual is strictly forbidden

12 TROUBLESHOOTING

In this section you will find a list of the most common problems that may cause the chiller unit to stop or malfunction.
Possible remedies are shown alongside a description of easily identifiable remedies.

Warning ⚠ Extreme care should be taken when performing work or repairs on the unit: overconfidence can result in injuries, even serious ones, to inexpert individuals. Operations marked with the letter "U" can be performed directly by the user, who must carefully follow the instructions provided in this manual. Operations marked with the letter "S" may be performed exclusively by specialised personnel.
Once the cause has been identified, you are advised to contact a Galletti service centre or a qualified technician for help.

SYMPTOM	Cooling	Heating	Who can take corrective action **U** = User **S** = specialised personnel	Possible control panel indication	Probable cause	Possible remedy
A The unit does not start	X	X	S	**Digital input alarm**	Faulty connection or contacts open Wrong voltage	Check the voltage and close the contacts
	X	X	S		Not enabled by remote controls	Check the efficiency of the water circulation pump, pressure switch, bleed air from the circuit; check whether contacts 16 and 30 on the terminal board are closed
	X X	X X	S U	**Alarm falty probe - evaporator water inlet temperature**	Service thermostat sensor defective Not enabled by service thermostat.	Check and replace if necessary System at the set temperature, no demand; check the setting
	X	X	U	**Antifreeze alarm circuit 1**	Not enabled by antifreeze thermostat	Check the water temperature Checking the antifreeze setting
	X	X	S	**Alarm falty probe - evaporator water inlet temperature**	Antifreeze sensor defective	Check whether it is functioning properly
	X	X	S		Tripping of main circuit breaker	Check for the presence of short circuits in the wiring or windings of the pump, fan and compressor motors or in the transformer.
	X X	X X	S S	**LOW pressure alarm circuit 1** **HIGH pressure alarm circuit 1**	Not enabled by high or low pressure switch Compressor defective	See items D-E See item B
B The compressor does not start	X	X	S		Compressor burnout or seizure	Replace the compressor
	X	X	S		Compressor contactor deenergized	Check the voltage at either end of the compressor contactor coil and verify the continuity of the coil itself
	X	X	S		Power circuit open	Locate the cause that tripped the protection; check for the presence of short circuits in the wiring or windings of the pump, fan and compressor motors or in the transformer
	X	X	S	**Inverter Alarm**	Motor thermal protection open	The compressor has operated in critical conditions or there is insufficient refrigerant within the circuit: check the working conditions and make sure they fall within the operating limits. Refrigerant leak: refer to item G
		X	U		Water circulation pump blocked	Release the pump
		X	S		Water circulation pump defective	Check the pump and replace it if necessary.
C The compressor starts up and stops repeatedly	X	X	S	**Possible faulty pump**	Minimum pressure switch has tripped	See item E
	X	X	S	**Possible faulty pump**	Compressor contactor defective	Check and replace if necessary
	X	X	S	**LOW pressure alarm circuit 1**	Lack of refrigerant	See item G.

All copying, even partial, of this manual is strictly forbidden

12 TROUBLESHOOTING

SYMPTOM	Cooling	Heating	Who can take corrective action **U** = User **S** = specialised personnel	Possible control panel indication	Probable cause	Possible remedy
D The compressor does not start because the maximum pressure switch has tripped	X	X	S	**HIGH pressure alarm circuit 1**	Pressure switch failure	Check and replace
	X	X	S	**HIGH pressure alarm circuit 1**	Excessive refrigerant charge	Discharge the excess gas
	X		U	**HIGH pressure alarm circuit 1**	Finned coil obstructed, insufficient air flow	Remove dirt from the coil and any obstacles to air flow.
	X		S	**HIGH pressure alarm circuit 1**	Fan not working	See item F
	X	X	S	**HIGH pressure alarm circuit 1**	Presence of incondensable gas in the cooling circuit	Recharge the circuit after having drained and evacuated it
	X	X	S	**HIGH pressure alarm circuit 1**	Refrigerant filter clogged	Check and replace
E The compressor does not start because the minimum pressure switch has tripped	X	X	S	**LOWpressure alarm circuit 1**	Pressure switch failure	Check and replace
	X	X	S	**LOWpressure alarm circuit 1**	Unit completely empty	See item G
		X	S	**LOWpressure alarm circuit 1**	Finned coil obstructed, insufficient air flow	Remove dirt from the coil
		X	S	**LOWpressure alarm circuit 1**	Presence of frost on the evaporating coil	See item O
		X	U	**LOWpressure alarm circuit 1**	Evaporator fan not working	See item F
	X	X	S	**LOWpressure alarm circuit 1**	Refrigerant filter clogged	Check and replace
	X	X	S	**LOWpressure alarm circuit 1**	Expansion valve is not working properly	Check and replace if necessary
	X	X	S	**LOWpressure alarm circuit 1**	Presence of humidity in the cooling circuit	Replace the filter and, if necessary, dry out the circuit and recharge
F The fans do not start	X	X	S	**HIGH pressure alarm circuit 1** **LOWpressure alarm circuit 1**	Fan contactor deenergized (MPI only)	Check the voltage at either end of the contactor coil and verify the continuity of the coil itself
	X	X	S	**HIGH pressure alarm circuit 1** **LOWpressure alarm circuit 1**	No power output by the fan speed control card (only MPI H or MPI with condensation control)	Check the contacts and replace if necessary
	X	X	S	**HIGH pressure alarm circuit 1** **LOWpressure alarm circuit 1**	The fan's internal thermal protection has tripped	Check the fan conditions and the air temperature while the unit is running.
	X	X	S	**HIGH pressure alarm circuit 1** **LOWpressure alarm circuit 1**	Fan motor defective	Check and replace if necessary
	X	X	S	**HIGH pressure alarm circuit 1** **LOWpressure alarm circuit 1**	Loose electrical connections	Check and fasten securely

All copying, even partial, of this manual is strictly forbidden

12 TROUBLESHOOTING

SYMPTOM	Cooling	Heating	Who can take corrective action U = User S = specialised personnel	Possible control panel indication	Probable cause	Possible remedy
G Lack of gas	X	X	S	**LOWpressure alarm circuit 1**	Cooling circuit leak	Check the cooling circuit using a leak detector after pressurising the circuit to approximately 4 bars. Repair, evacuate and refill.
I Frost in liquid pipe downstream from a filter	X	X	S	**HIGH pressure alarm circuit 1** **LOWpressure alarm circuit 1**	Liquid filter clogged	Replace the filter
L The unit works continuously without ever stopping	X	X	S		Lack of refrigerant gas	See item G
	X	X	U		Wrong setting of operating thermostat	Check the setting
	X	X	S		Thermal overload	Reduce the thermal load
	X	X	S		Compressor does not provide the rated heating capacity	Check and replace or overhaul
	X	X			Liquid filter clogged	Replace
M The unit works regularly but with an insufficient capacity	X	X	S		Low level of refrigerant	See item G
	X	X	S		4-way cycle reversing valve defective	Check the valve power supply and coils and replace the valve if necessary
N Frost in the compressor intake pipe	X	X	S		Expansion valve is not working properly	Check replace
	X				Water circulation pump blocked	Release the pump
	X	X	S		Water circulation pump defective	Check the pump and replace it if necessary
	X	X	S		Low level of refrigerant	See item G
	X	X	S		Liquid filter clogged	Replace
O The defrosting cycle is never activated		X	S		4-way cycle reversing valve defective	Check the valve power supply and coils and replace the valve if necessary
		X	S		The defrost thermostat has broken down or has been set incorrectly	Check and replace if defective or change the setting
P Abnormal noises detected in the system	X	X	S		The compressor is noisy	Check and replace if necessary
	X	X	S		The panels vibrate	Fasten properly

All copying, even partial, of this manual is strictly forbidden

ISTRUZIONI PER AVVIAMENTO

1 VS. INSTALLAZIONE

Nel manuale d'installazione troverete tutti i suggerimenti per una perfetta posa delle apparecchiature. Ricordate d'installare il filtro a "**Y**" a protezione della scambiatore (***obbligatorio***).

2 VS. COLLEGAMENTO

Effettuate correttamente tutti gli allacciamnti. Nel Modulo Richiesta Primo Avviamento troverete una lista di tutte le verifiche prima di richiederci lo start-up della macchina.

3 VS. RICHIESTA

Con almeno una settimana di anticipo inviate via fax il modulo di richiesta persente nei documenti della macchina in mancanza di tale documento fare richiesta alla sede Galletti:

Tel. 051 8908111 - **Fax.** 051 8908122
e-mail: assistenza@galletti.it

4 NS. APPUNTAMENTO

L'assistenza Galletti organizzerà l'intervento facendovi contattare dal Centro Assistenza Tecnica Autorizzato di zona.

5 NS. COLLAUDO

Assieme a Vs. personale verranno effettuati tutti i controlli preliminari ed il collaudo della macchina.
Al Vs. personale verranno date istruzioni per la corretta gestione della macchina.

6 NS. GARANZIA

A collaudo effettuato il Centro Assistenza Tecnica Autorizzato rilascerà il certificato di collaudo valido per la garanzia della macchina.

Galletti S.p.A. mette a Vs. disposizione un programma di manutenzione personalizzato.

All copying, even partial, of this manual is strictly forbidden

NOTES

All copying, even partial, of this manual is strictly forbidden

NOTES

All copying, even partial, of this manual is strictly forbidden

Galletti
AIR CONDITIONING

www.galletti.it

40010 Bentivoglio (BO) Via Romagnoli 12/a Tel. 051/8908111 - Fax. 051/8908122
Company UNI EN ISO 9001 and OHSAS 18001 certified