GENERAL

REFRIGERANT R32 INVERTER

AIR CONDITIONER

Wall mounted type

SERVICE MANUAL

INDOOR

ASHH30KMTB
ASHH36KMTB

OUTDOOR

AOHH30KMTB
AOHH36KMTB

FUJITSU GENERAL LIMITED

SR_AS073EG_04
2023.02.22

Notices:
- Product specifications and design are subject to change without notice for future improvement.
- For further details, please check with our authorized dealer.

Trademarks

FGLair™ is trademark of Fujitsu General Limited in the United States, other countries or both.

Google Play™ is trademark of Google LLC.

App Store® is a service mark of Apple Inc., registered in the U.S. and other countries.

Copyright © 2022, 2023 Fujitsu General Limited. All rights reserved.

CONTENTS

1. GENERAL INFORMATION

2. TECHNICAL DATA AND PARTS LIST

3. TROUBLESHOOTING

4. CONTROL AND FUNCTIONS

5. FILED WORKING

1. GENERAL INFORMATION

CONTENTS

1. GENERAL INFORMATION

1. Specifications 01-1
1-1. Indoor unit 01-1
1-2. Outdoor unit.....01-3
2. Dimensions 01-4
2-1. Indoor unit 01-4
2-2. Outdoor unit.....01-6

1. Specifications

1-1. Indoor unit

Type					Wall mounted	
					Inverter heat pump	
Model name					ASHH30KMTB	ASHH36KMTB
Power supply					230 V~ 50 Hz	
Power supply intake					Outdoor unit	
Available voltage range					198—264 V	
Capacity	Cooling	Rated		kW	8.0	9.4
				Btu/h	27,300	32,100
		Min.—Max.		kW	2.9—9.0	2.9—10.0
				Btu/h	9,900—30,700	9,900—34,100
	Heating	Rated		kW	8.8	10.1
				Btu/h	30,000	34,500
		Min.—Max.		kW	2.2—11.8	2.7—12.6
				Btu/h	7,500—40,200	9,200—42,900
Input power	Cooling	Rated		kW	2.33	3.16
		Min.—Max.			0.54—3.86	0.54—4.30
	Heating	Rated			2.20	2.73
		Min.—Max.			0.48—4.23	0.48—4.30
	Fan	HIGH		W	62.0	
		MED			36.5	
		LOW			21.0	
		QUIET			11.5	
Current	Cooling	Rated		A	10.2	13.9
	Heating				9.7	12.0
Energy efficiency class	Cooling				A++	
	Heating (Average)				A+	
Pdesign	Cooling			kW	8.00	9.40
	Heating (Average)				6.50	7.10
SEER	Cooling			kWh/kWh	6.68	6.10
SCOP	Heating (Average)				4.50	
Annual energy consumption	QCE			kWh/a	419	534
	QHE (Average)				1,994	2,189
EER	Cooling			kW/kW	3.43	2.97
COP	Heating				4.00	3.70
Sensible capacity	Cooling			kW	6.15	6.70
Power factor	Cooling			%	99	
	Heating				99	
Moisture removal				L/h (pints/h)	2.6 (4.6)	3.8 (6.7)
Maximum operating current*1	Cooling			A	21.0	21.5
	Heating				21.0	21.5
Fan	Airflow rate	Cooling	HIGH	m^3/h	1,330	
			MED		1,100	
			LOW		920	
			QUIET		720	
		Heating	HIGH		1,330	
			MED		1,100	
			LOW		920	
			QUIET		720	
	Type × Q'ty				Cross flow fan × 1	
	Motor output			W	61	
Sound pressure level*2		Cooling	HIGH	dB (A)	50	
			MED		44	
			LOW		40	
			QUIET		33	
		Heating	HIGH		49	
			MED		44	
			LOW		39	
			QUIET		33	
Sound power level		Cooling	HIGH	dB (A)	65	
		Heating			65	
Heat exchanger		Dimensions (H × W × D)		mm	Main: 448 × 900 × 30 Sub1: 84 × 900 × 13.3 Sub2: 126 × 900 × 13.3	
		Fin pitch			Main: 1.2, Sub: 1.4	
		Rows × Stages			Main: 3 × 28, Sub1: 1 × 4, Sub2: 1 × 6	
		Pipe type			Copper tube	
		Fin type			Aluminum	
Enclosure		Material			Polystyrene	
		Color			White Approximate color of Munsell N9.25/	
Dimensions (H × W × D)		Net		mm	340 × 1,150 × 280	
		Gross			405 × 1,270 × 450	
Weight		Net		kg	18.5	
		Gross			24.5	
Connection pipe		Size	Liquid	mm (in)	Ø 9.52 (Ø 3/8)	
			Gas		Ø 15.88 (Ø 5/8)	
		Method			Flare	
Drain hose		Material			PVC	
		Tip diameter		mm	Ø 13.8 (I.D.), Ø 15.8 to Ø 16.7 (O.D.)	
Operation range		Cooling		°C	18 to 32	
				%RH	80 or less	
		Heating		°C	16 to 30	
Remote controller					Wireless or Mobile app (FGLair™I*3) (Wired [option])	

Type	Wall mounted	
	Inverter heat pump	
Model name	ASHH30KMTB	ASHH36KMTB

NOTES:

- Specifications are based on the following conditions:
  - Cooling: Indoor temperature of 27 °CDB/19 °CWB, and outdoor temperature of 35 °CDB/24 °CWB.
  - Heating: Indoor temperature of 20 °CDB/15 °CWB, and outdoor temperature of 7 °CDB/6 °CWB.
  - Pipe length: 5.0 m, Height difference: 0 m. (Between outdoor unit and indoor unit.)
- Protective function might work when using it outside the operation range.
- *1: Maximum operating current is the total current of the indoor unit and the outdoor unit.
- *2: Sound pressure level:
  - Measured values in manufacturer's anechoic chamber.
  - Because of the surrounding sound environment, the sound levels measured in actual installation conditions might be higher than the specified values here.
- *3: Available on Google Play store or on App Store. For details, refer to the setting manual.
- This data is based on EN 14511 standard.

1-2. Outdoor unit

Type				Inverter heat pump	
Model name				**AOHH30KMTB**	**AOHH36KMTB**
Power supply				230 V ~ 50 Hz	
Power supply intake				Outdoor unit	
Available voltage range				198—264 V	
Starting current			A	10.2	13.9
Fan	Airflow rate	Cooling	m^3/h	3,750	
		Heating		3,750	
	Type × Q'ty			Propeller × 1	
	Motor output		W	100	
Sound pressure level*1		Cooling	dB (A)	53	55
		Heating		55	55
Sound power level		Cooling	dB (A)	68	70
		Heating		69	70
Heat exchanger type		Dimensions (H × W × D)	mm	Main1: 756 × 905 × 18.19 Main2: 756 × 905 × 18.19	
		Fin pitch		1.45	
		Rows × Stages		1 × 36	
		Pipe type		Copper	
		Fin	Type (Material)	Aluminum	
			Surface treatment	Blue fin	
Compressor	Type × Q'ty			DC Twin rotary × 1	
	Motor output		W	1,500	
Refrigerant		Type (Global warming potential)		R32 (675)	
		Factory charge	g	1,900	
Refrigerant oil		Type		FW68D	
		Amount	cm^3	600	
Enclosure		Material		Steel sheet	
		Color		Beige Approximate color of Munsell 10YR 7.5/1.0	
Dimensions (H × W × D)	Net		mm	788 × 940 × 320	
	Gross			966 × 1,027 × 445	
Weight	Net		kg	52	
	Gross			62	
Connection pipe	Size	Liquid	mm (in)	Ø9.52 (3/8)	
		Gas		Ø15.88 (5/8)	
	Method			Flare	
	Pre-charge length		m	30	
	Max. length			50	
	Max. height difference			30	
Operation range		Cooling	°C	-15 to 46	
		Heating		-15 to 24	
Drain hose		Material		LDPE	
		Size	mm	Ø13.0 (I. D.), Ø16.0 to Ø16.7 (O. D.)	

NOTES:

- Specifications are based on the following conditions:
  - Cooling: Indoor temperature of 27 °CDB/19 °CWB, and outdoor temperature of 35 °CDB/24 °CWB.
  - Heating: Indoor temperature of 20 °CDB/15 °CWB, and outdoor temperature of 7 °CDB/6 °CWB.
  - Pipe length: 5.0 m, Height difference: 0 m. (Between outdoor unit and indoor unit.)
- Protective function might work when using it outside the operation range.
- *1: Sound pressure level
  - Measured values in manufacturer's anechoic chamber.
  - Because of the surrounding sound environment, the sound levels measured in actual installation conditions might be higher than the specified values here.
- This data is based on EN 14511 standard.

2. Dimensions

2-1. Indoor unit

■ Models: ASHH30KMTB and ASHH36KMTB

Unit: mm

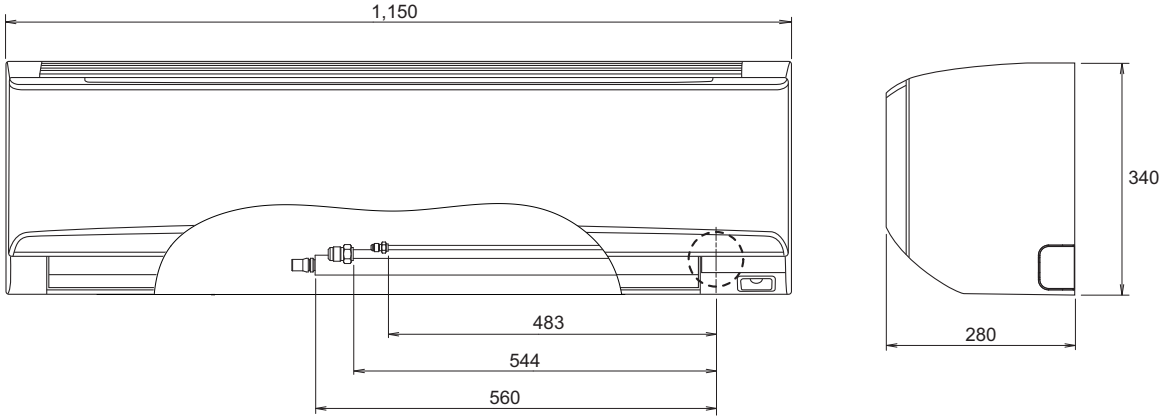

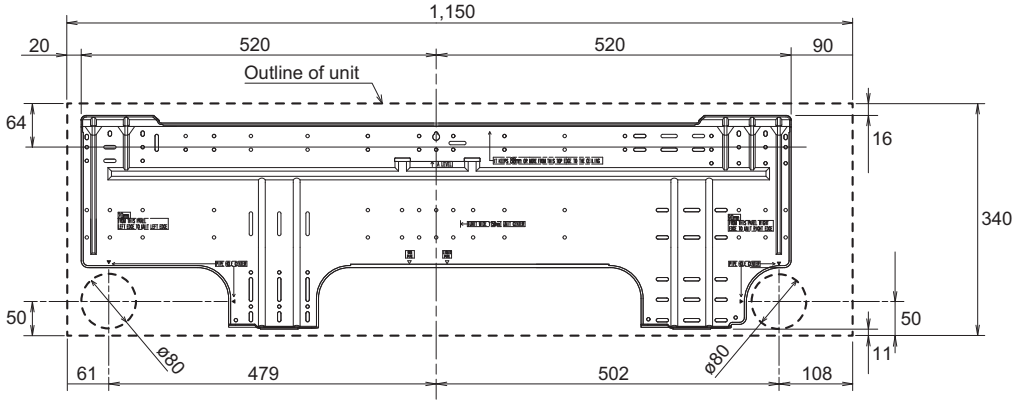

GENERAL INFORMATION

● Installation space requirement

Provide sufficient installation space for product safety.

Unit: mm

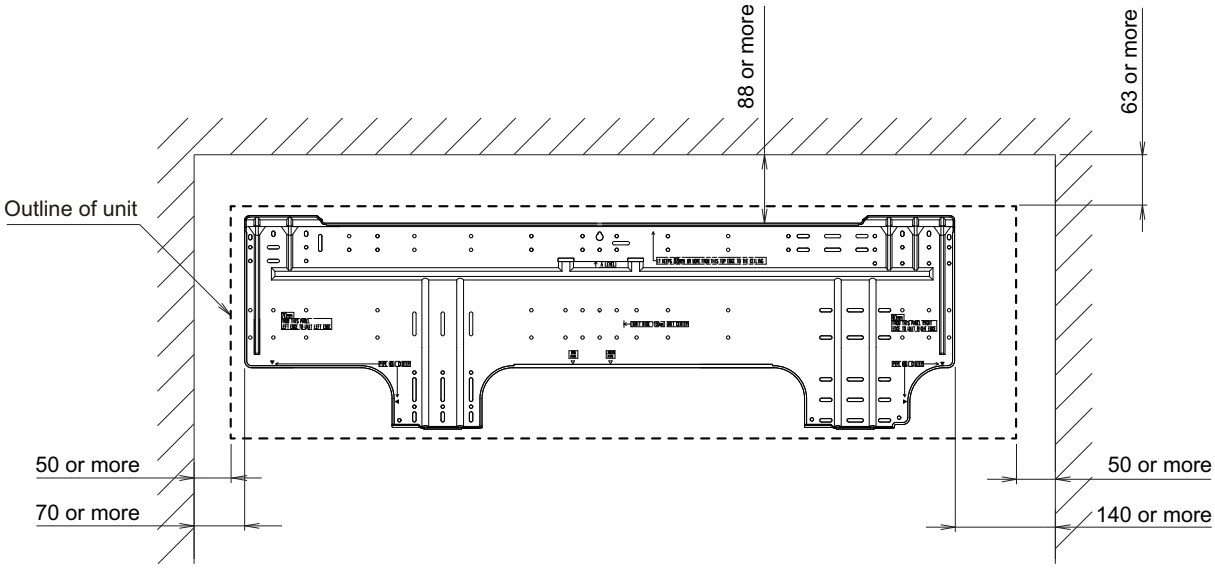

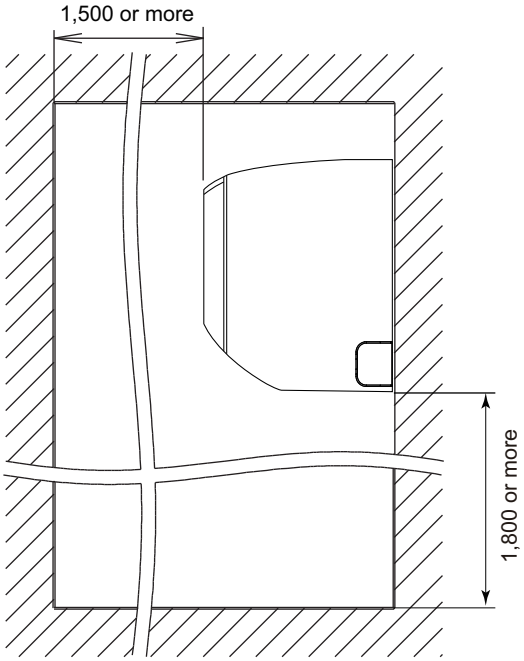

2-2. Outdoor unit

■ Models: AOHH30KMTB and AOHH36KMTB

Unit: mm

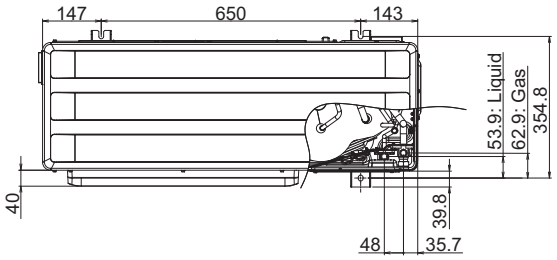

Top view

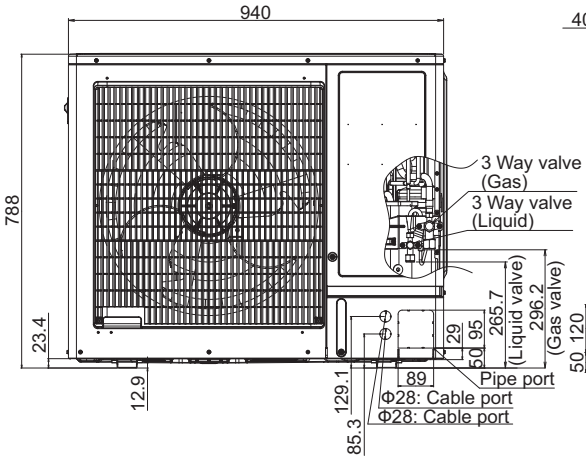

Front view

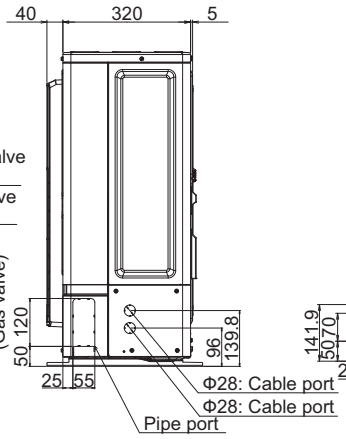

Side view

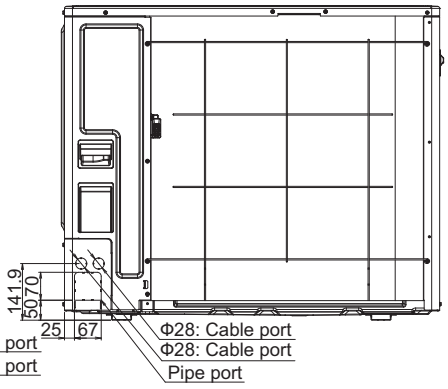

Rear view

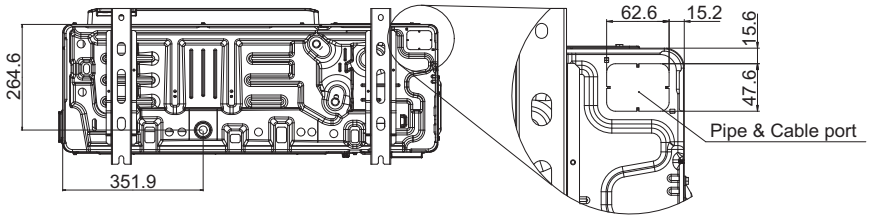

Bottom view

2. TECHNICAL DATA AND PARTS LIST

CONTENTS

2. TECHNICAL DATA AND PARTS LIST

1. Precautions.....02-1

2. Indoor unit parts list.....02-2

2-1. Models: ASHH30KMTB and ASHH36KMTB 02-2

3. Outdoor unit parts list.....02-6

3-1. Models: AOHH30KMTB and AOHH36KMTB 02-6

4. Accessories 02-10

4-1. Indoor unit 02-10

4-2. Outdoor unit.....02-10

5. Optional parts 02-11

5-1. Indoor unit 02-11

6. Refrigerant system diagrams.....02-14

6-1. Models: AOHH30KMTB and AOHH36KMTB 02-14

7. Wiring diagrams 02-15

7-1. Indoor unit 02-15

7-2. Outdoor unit.....02-16

8. PC board diagrams 02-17

8-1. Models: ASHH30KMTB and ASHH36KMTB 02-17

8-2. Models: AOHH30KMTB and AOHH36KMTB 02-18

1. Precautions

When you start servicing, pay attention to the following points. For detailed precautions, refer to the installation manual of the products.

⚠ CAUTION

- Service personnel
  - Any person who is involved with working on or breaking into a refrigerant circuit should hold a current valid certificate from an industry-accredited assessment authority, which authorizes their competence to handle refrigerants safely in accordance with an industry recognized assessment specification.
  - Servicing shall only be performed as recommended by the equipment manufacturer. Maintenance and repair requiring the assistance of other skilled personnel shall be carried out under the supervision of the person competent in the use of flammable refrigerants.
  - Servicing shall be performed only as recommended by the manufacturer.
- Work
  - Prior to beginning work on systems containing flammable refrigerants, safety checks are necessary to ensure that the risk of ignition is minimized. When repairing the refrigerant system, refer to the precautions written in the installation manual of the products before you start servicing.
  - Work shall be undertaken under a controlled procedure so as to minimize the risk of a flammable gas or vapor being present while the work is being performed.
  - All maintenance staff and others working in the local area shall be instructed on the nature of work being carried out.
  - Work in confined spaces shall be avoided.
  - The area around the workspace shall be sectioned off.
  - Ensure that the conditions within the area have been made safe by control of flammable material.
  - Electric shock may occur. After turning off the power, always wait 5 minutes before touching electrical components.
  - Do not touch the fins of the heat exchanger. Touching the heat exchanger fins could result in damage to the fins or personal injury such as skin rupture.
  - Do not place any other electrical products or household belongings under the product.
  - Condensation dripping from the product might get them wet, and may cause damage or malfunction to the property.
- Checking for presence of refrigerant
  - The area shall be checked with an appropriate refrigerant leak detector prior to and during work, to ensure the technician is aware of potentially flammable atmospheres.
  - Ensure that the leak detector being used is suitable for use with flammable refrigerants, i.e. non-sparking, adequately sealed or intrinsically safe.

- Service parts information and design are subject to change without notice for product improvement.
- For the latest information of the service parts, refer to our Service Portal.
  https://fujitsu-general.force.com/portal/
- Precise figure of the service parts listed in this manual may differ from the actual service parts.

2. Indoor unit parts list

2-1. Models: ASHH30KMTB and ASHH36KMTB

■ Exterior parts

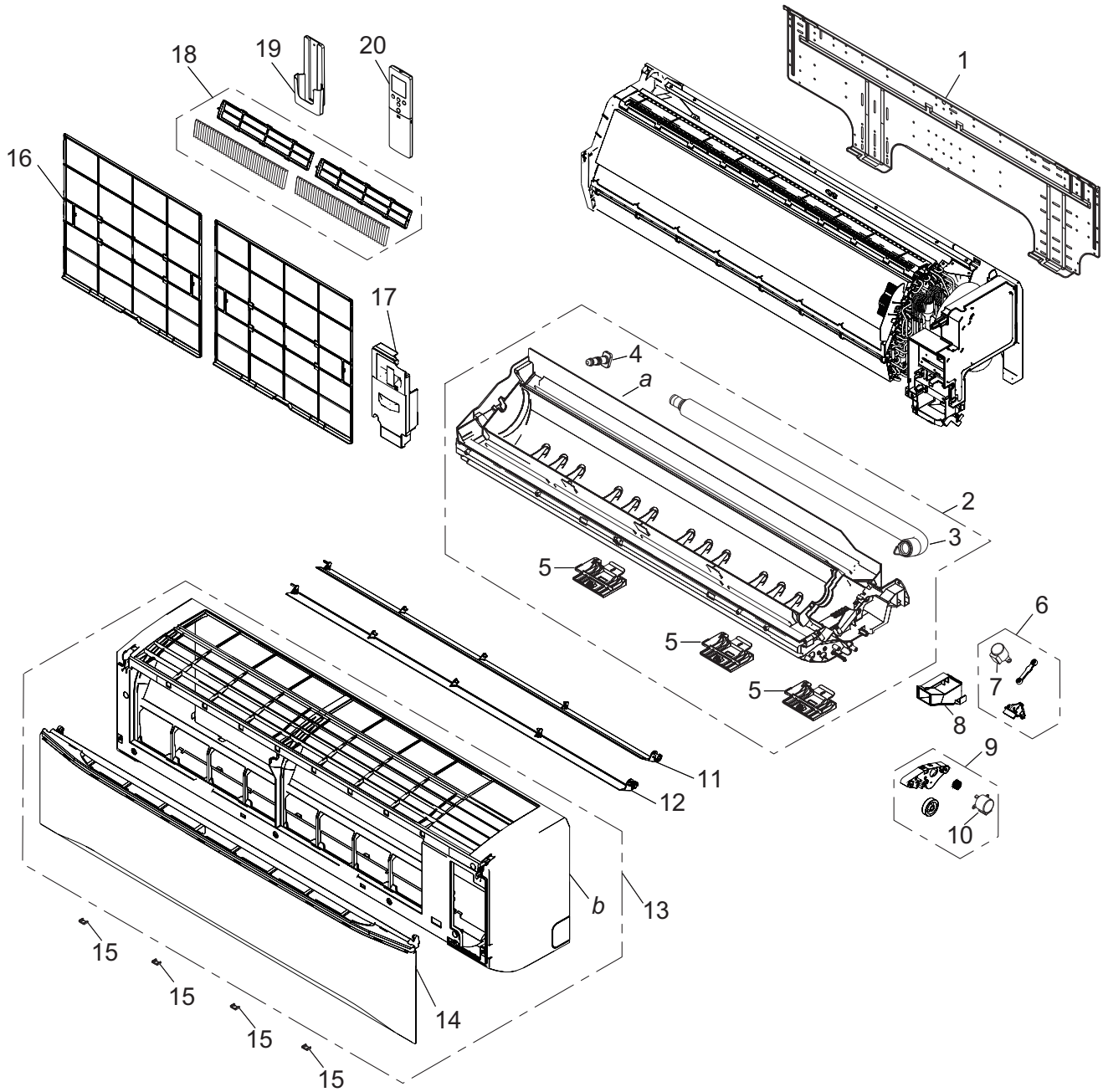

TECHNICAL DATA AND PARTS LIST

Item no.	Part no.	Part name	Service part
1	9386990004	Bracket panel	♦
2	9387060065	Casing assy	♦
3	9388540009	Drain hose assy	♦
4	9316177017	Drain cap	♦
5	9318743012	Pipe bracket	♦
6	9387063004	Link holder assy	♦
7	9900139186	Step motor	♦
8	9386997003	Cable guide	♦
9	9387062007	Gear cover assy	♦
10	9900384234	Step motor	♦
11	9386958011	Louver U	♦
12	9386959018	Louver Z	♦
13	9387072198	Front panel total assy	♦
14	9382114015	Intake grille assy	♦
15	9386986007	Screw cover	♦
16	9386960007	Air filter	♦
17	9387074017	Wire cover assy	♦
18	9315212016	Air clean filter assy	♦
19	9318912005	Remote controller holder	♦
20	9332438758	Remote controller assy	♦
a	—	Casing	—
b	—	Front panel	—

TECHNICAL DATA AND PARTS LIST

■ Evaporator and control

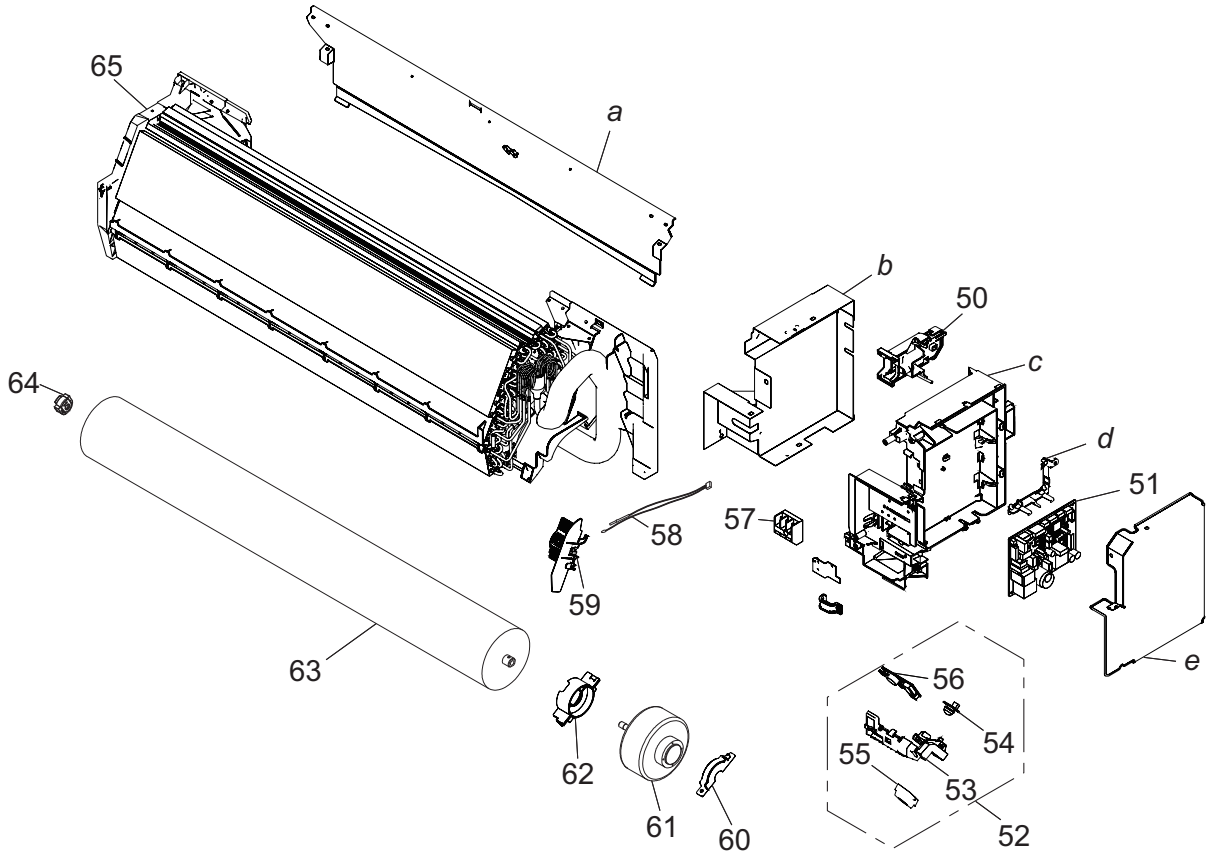

TECHNICAL DATA AND PARTS LIST

Item no.	Part no.	Part name	Service part
50	9383765063	WLAN adapter holder assy	♦
51	9711732439	Main PCB (For 30 model)	♦
	9711732446	Main PCB (For 36 model)	♦
52	9711146045	Display assy	♦
53	9387249019	Display case assy	♦
54	9317755061	Pyroelectric sensor	♦
55	9382134006	Front panel cover B assy	♦
56	9711147035	Indicator PCB	♦
57	9901013010	Terminal	♦
58	9900627027	Thermistor assy	♦
59	9386988001	Room thermistor holder	♦
60	9316568006	Motor cover	♦
61	9603839017	DC fan motor	♦
62	9316601000	Motor cover	♦
63	9387055009	Crossflow fan assy	♦
64	9306628017	Bearing C assy	♦
65	9387064070	Evaporator total assy	♦
66	9901010071	Wire with connector (USB adapter connection)	♦
67	9709626023	Wire with connector (CN10 on Main PCB—Pyroelectric sensor)	♦
a	—	Rear panel	—
b	—	Box shield assy	—
c	—	Control box	—
d	—	PCB holder A	—
e	—	Control cover	—

3. Outdoor unit parts list

3-1. Models: AOHH30KMTB and AOHH36KMTB

■ Exterior parts and chassis

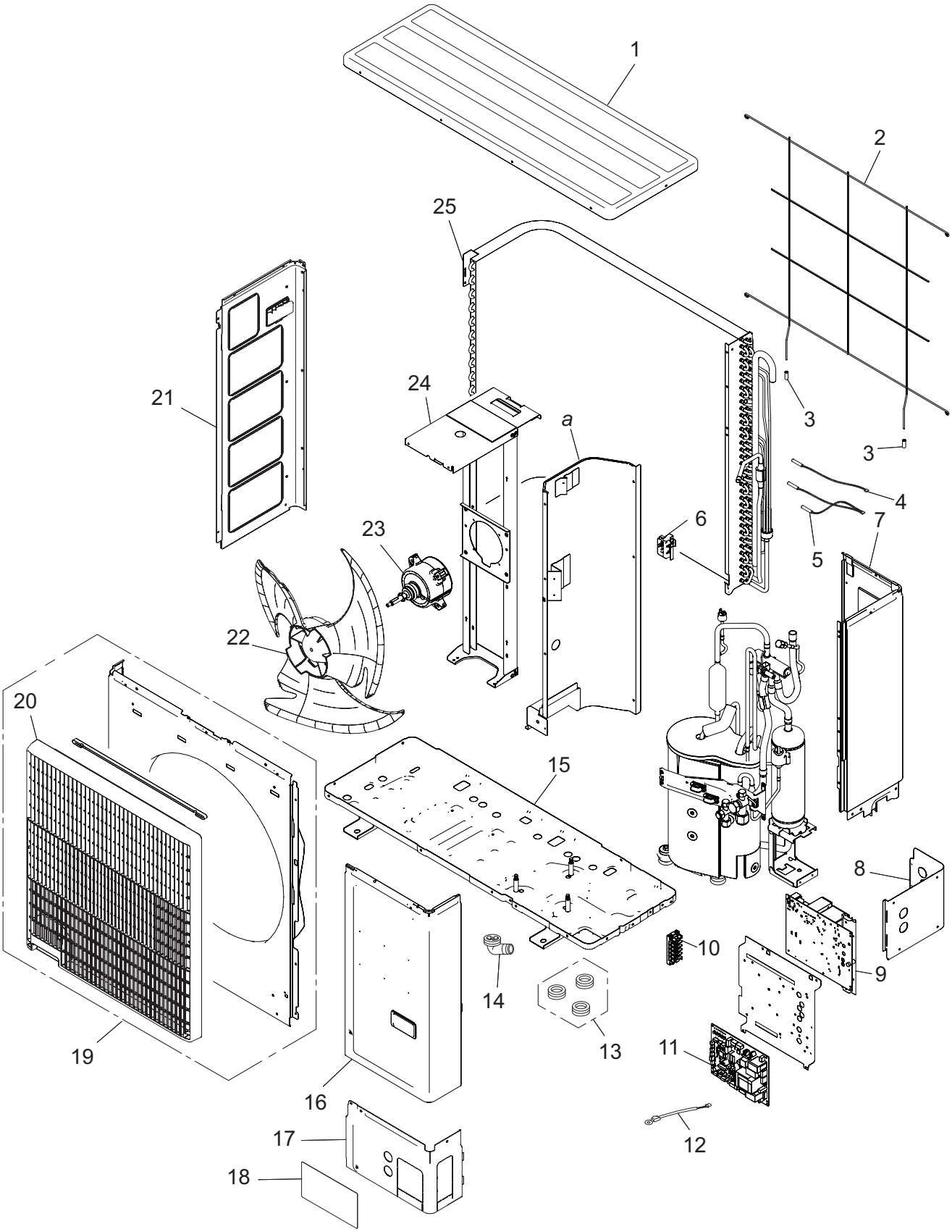

Item no.	Part no.	Part name	Service part
1	9383880001	Top panel assy	♦
2	9383779008	Protective net	♦
3	9375361013	Net rubber	♦
4	9900984038	Thermistor (Heat exchanger)	♦
5	9900727154	Thermistor assy	♦
6	9383607004	Thermo holder	♦
7	9383874000	Right panel sub assy	♦
8	9383879005	Rear pipe cover	♦
9	9709688083	Inverter PCB	♦
10	9900203061	Terminal	♦
11	9711432292	Main PCB (for 30 model)	♦
	9711432308	Main PCB (for 36 model)	♦
12	9901031014	Heat sink thermistor	♦
13	313166024302	Drain cap	♦
14	9303029015	Drain assy	♦
15	9350255009	Base assy	♦
16	9383876004	Service panel sub assy	♦
17	9383878008	Front pipe cover	♦
18	9372171059	Emblem rear	♦
19	9383863004	Front panel assy	♦
20	9383604003	Blow grille	♦
21	9383882005	Left panel sub assy	♦
22	9383336003	Propeller fan	♦
23	9603732011	DC fan motor	♦
24	9383862007	Motor bracket assy	♦
25	9374420612	Condenser sub assy	♦
—	9711332004	Wire with terminal (P102 on Main PCB—Terminal)	♦
—	9711332011	Wire with terminal (P103 on Main PCB—Terminal)	♦
—	9711198006	Wire with connector (P108 on Main PCB—Terminal)	♦
—	9711203007	Wire with connector (P660 on Main PCB—P662 on Inverter PCB)	♦
—	9711204004	Wire with connector (P661 on Main PCB—P663 on Inverter PCB)	♦
—	9711205001	Wire with connector (P350 on Main PCB—P351 on Inverter PCB)	♦
—	9711212009	Wire with connector (P650 on Inverter PCB—DC fan motor)	♦
—	9711206015	Wire with terminal (P400, 401, 402 on Inverter PCB—Compressor)	♦
—	9711213006	Wire with connector (P770 on Inverter PCB—Wire with connector [to Pressure switch]))	♦
—	9711214003	Wire with connector (Pressure switch.Wire with connector [to Inverter PCB])	♦
a	—	Separate wall assy	—

TECHNICAL DATA AND PARTS LIST

■ Compressor

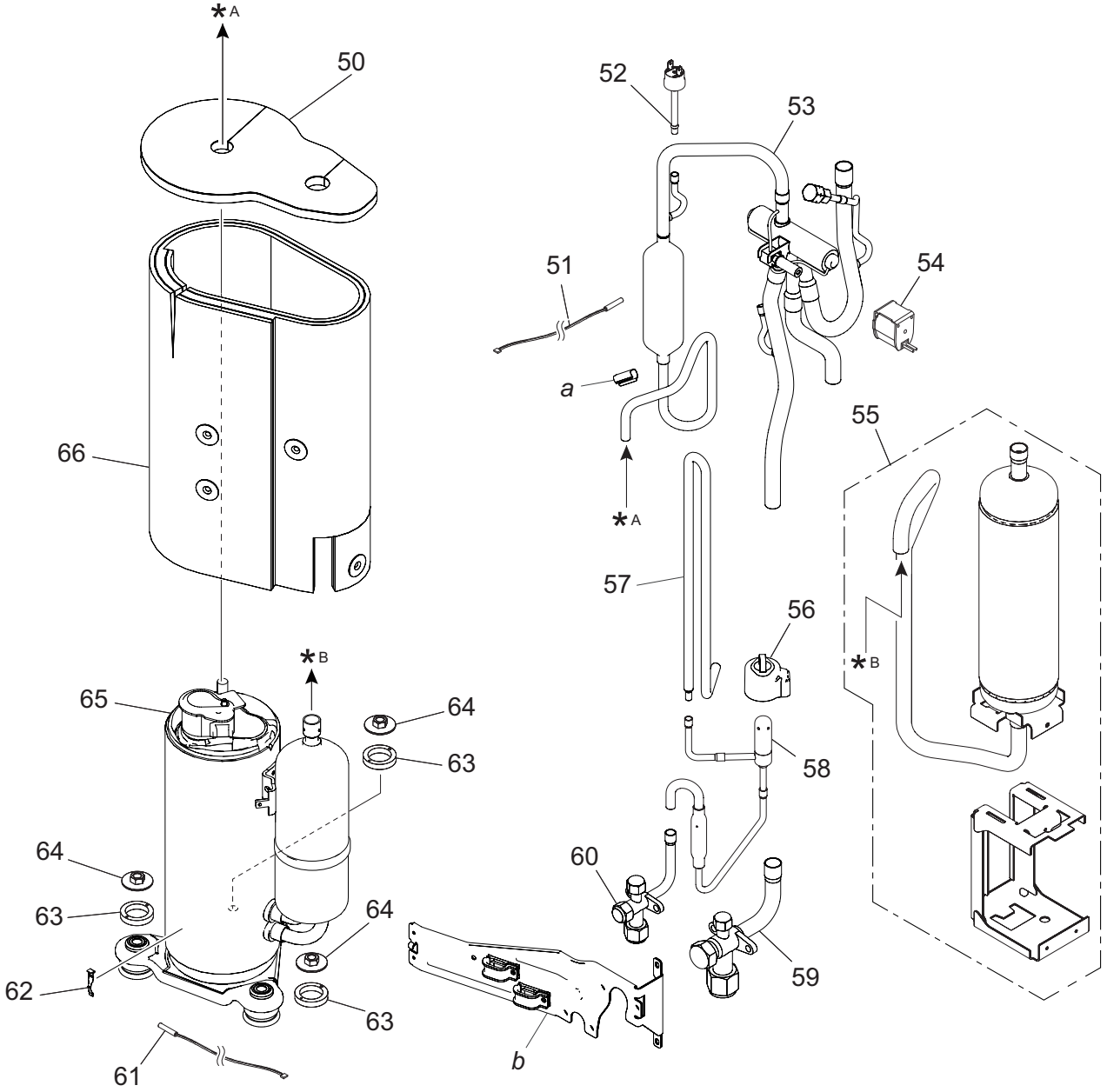

Item no.	Part no.	Part name	Service part
50	9380516064	S-ABS (Top)	♦
51	9900565091	Thermistor (Outdoor temp.)	♦
52	9900186029	Pressure switch	♦
53	9374425648	4-way valve assy	♦
54	9970194016	Solenoid	♦
55	9384848017	Accumulator assy	♦
56	9970209000	Expansion valve coil	♦
57	9380416029	Joint pipe D	♦
58	9370947373	Expansion valve assy	♦
59	9379079013	3-way valve assy	♦
60	9377958037	3-way valve assy	♦
61	9900985035	Thermistor (Compressor)	♦
62	9810028006	Thermistor stopper	♦
63	9379179072	Rubber washer E	♦
64	9377973016	Special nut	♦
65	9383821004	Compressor assy	♦
66	9379647168	S-ABS (Body)	♦
a	—	Thermostat holder	—
b	—	Wiring fixation unit	—

TECHNICAL DATA AND PARTS LIST

4. Accessories

4-1. Indoor unit

■ Accessories

Part name	Exterior	Q'ty	Part name	Exterior	Q'ty
Operating manual		1	Drain hose insulation		1
Operating manual (CD-ROM)		1	Cloth tape		1
Installation manual		1	Tapping screw (large)		8
Wall hook bracket		1	Tapping screw (small)		2
Remote controller		1	Air cleaning filters		1
Battery		2	Filter holder		2
Remote controller holder		1			

4-2. Outdoor unit

■ Models: AOHH30KMTB and AOHH36KMTB

Part name	Exterior	Qty	Part name	Exterior	Qty
Installation manual		1	Drain cap		3
Drain pipe		1	One-touch bush		2

5. Optional parts

5-1. Indoor unit

■ Controllers

Exterior	Part name	Model name	Summary
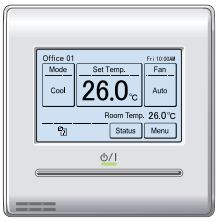	Wired Remote Controller	UTY-RNRGZ*	Easy finger touch operation with LCD panel. Backlit LCD enables easy operation in a dark room. Wire type: Non-polar 2-wire Optional Communication Kit is necessary for installation.
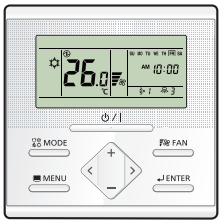	Wired Remote Controller	UTY-RLRG	High visibility and easy operation. Room temperature can be accurately controlled using the thermo sensor. Wire type: Non-polar 2-wire Optional Communication Kit is necessary for installation.
	Compact Wired Remote Controller	UTY-RCRGZ1	Compact body and easy operation. Room temperature can be accurately controlled using the thermo sensor. Wire type: Non-polar 2-wire Optional Communication Kit is necessary for installation.
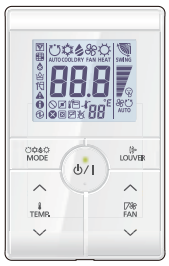	Simple Remote Controller	UTY-RSRG	Compact remote controller concentrates on the basic functions such as Start/Stop, fan control, temperature setting, and operation mode. Wire type: Non-polar 2-wire Optional Communication Kit is necessary for installation.
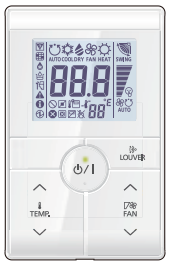	Simple Remote Controller	UTY-RHRG	Compact remote controller concentrates on the basic functions such as Start/Stop, fan control, and temperature setting. Wire type: Non-polar 2-wire Optional Communication Kit is necessary for installation.

NOTES:

- Available functions may differ by the remote controller. For details, refer to the operation manual.
- When using the group controlling system of the Wired Remote Controller, using WLAN Adapter is prohibited.

■ Others

Exterior	Part name	Model name	Summary
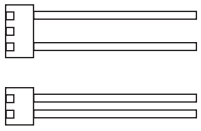	External Connect Kit	UTY-XWZX	Use to connect with various peripheral devices and air conditioner PCB. Connecting point: CN47 on Main PCB
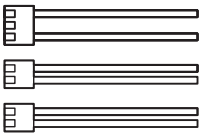	External Connect Kit	UTY-XWZXZ5	Required when external device is connected. Connecting point: CN47 on Main PCB
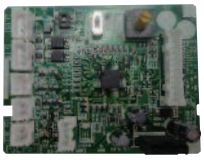	External Input and Output PCB	UTY-XCSXZ2	Use to connect with external devices and air conditioner PCB. Optional External Connect Kit is necessary for installation. Connecting point: CN65 on Main PCB
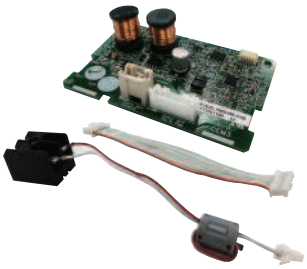	Communication Kit	UTY-TWRXZ2	Use to connect Non-polar 2-core wired remote controller.
	WLAN Adapter	UTY-TFSXF2	Remotely manage an air conditioning system using mobile devices such as smartphones and tablets. Appropriate application for each region is required to use this option. For details, contact FGL sales company. Connecting point: Main PCB via USB connector
	Modbus Converter	UTY-VMSX	For connection between indoor unit with UART interface and a Modbus open network. Connecting point: CN65 on Main PCB
	KNX Convertor	UTY-VKSX	For connection between indoor unit with UART interface and a KNX open network. Connecting point: CN65 on Main PCB
	Network Converter	UTY-VTGX	This converter is required when connecting single split system to VRF network system. Use the terminal for wired remote controller.
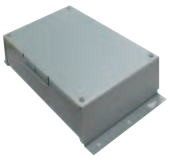	Network Converter (AC power supply)	UTY-VTGXV	This converter is required when connecting single split system to VRF network system. Use the terminal for wired remote controller.
	External Switch Controller	UTY-TERX	Air conditioner switching can be controlled by connecting other external sensor switches. Use the terminal for wired remote controller.

TECHNICAL DATA
AND PARTS LIST

6. Refrigerant system diagrams

6-1. Models: AOHH30KMTB and AOHH36KMTB

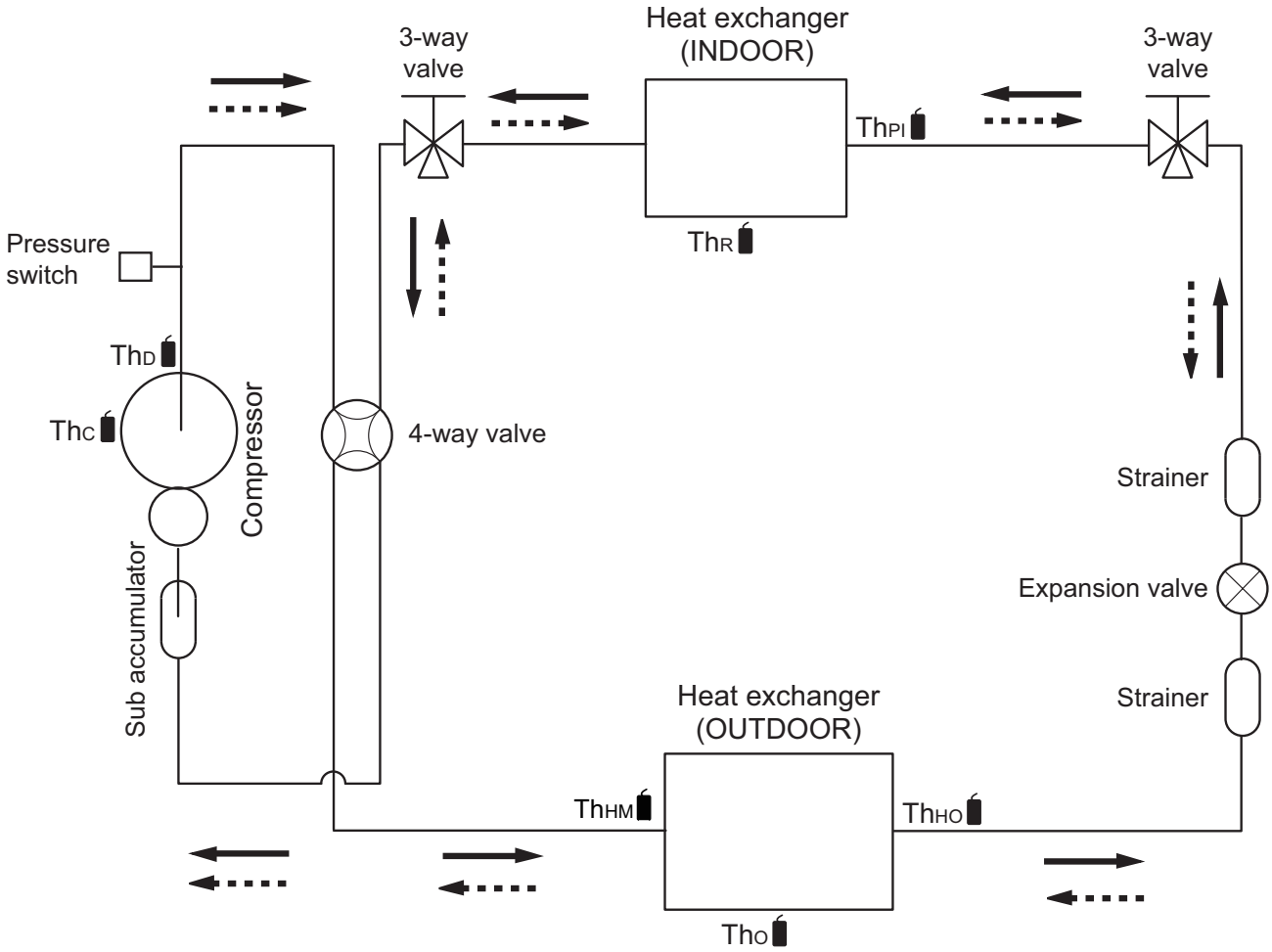

: Cooling
: Heating

ThC : Thermistor (Compressor temperature)
ThD : Thermistor (Discharge temperature)
ThHM : Thermistor (Heat exchanger middle temperature)
ThO : Thermistor (Outdoor temperature)
ThHO : Thermistor (Heat exchanger out temperature)
ThPI : Thermistor (Pipe temperature)
ThR : Thermistor (Room temperature)

7. Wiring diagrams

7-1. Indoor unit

■ Models: ASHH30KMTB and ASHH36KMTB

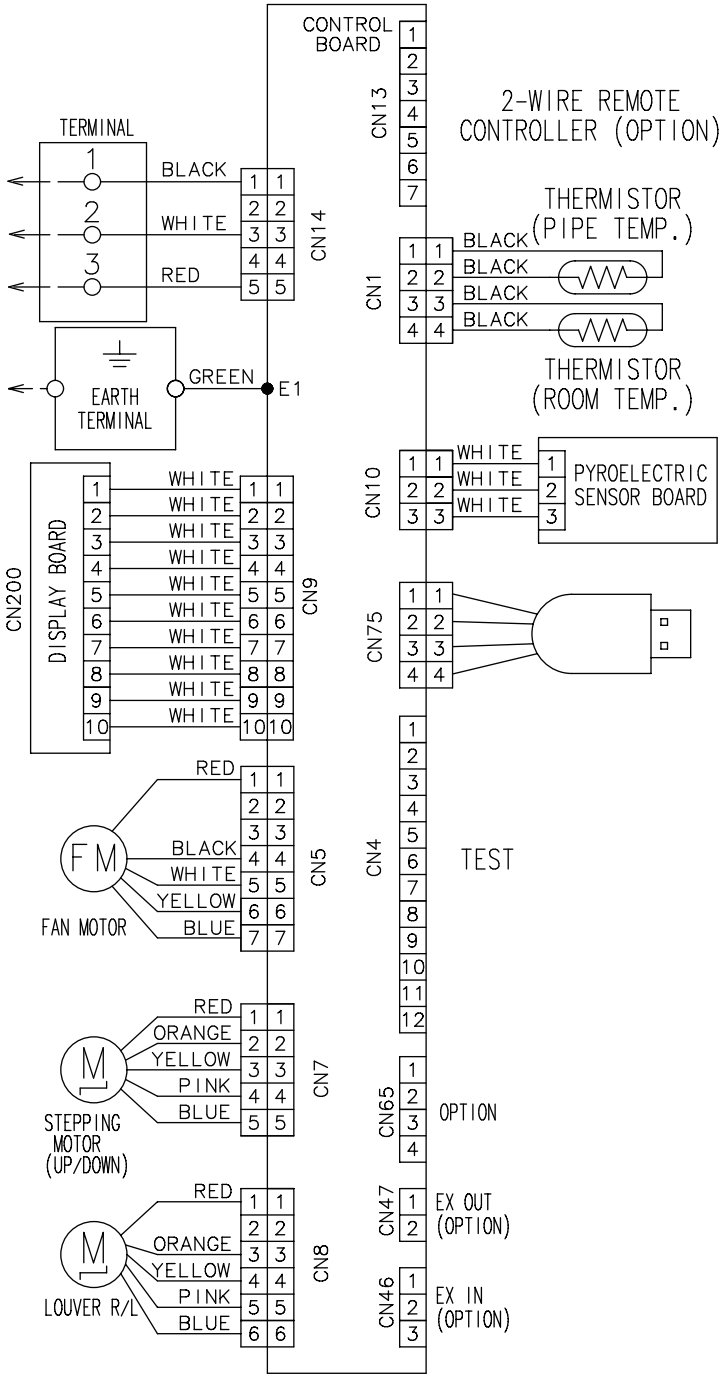

7-2. Outdoor unit

■ Models: AOHH30KMTB and AOHH36KMTB

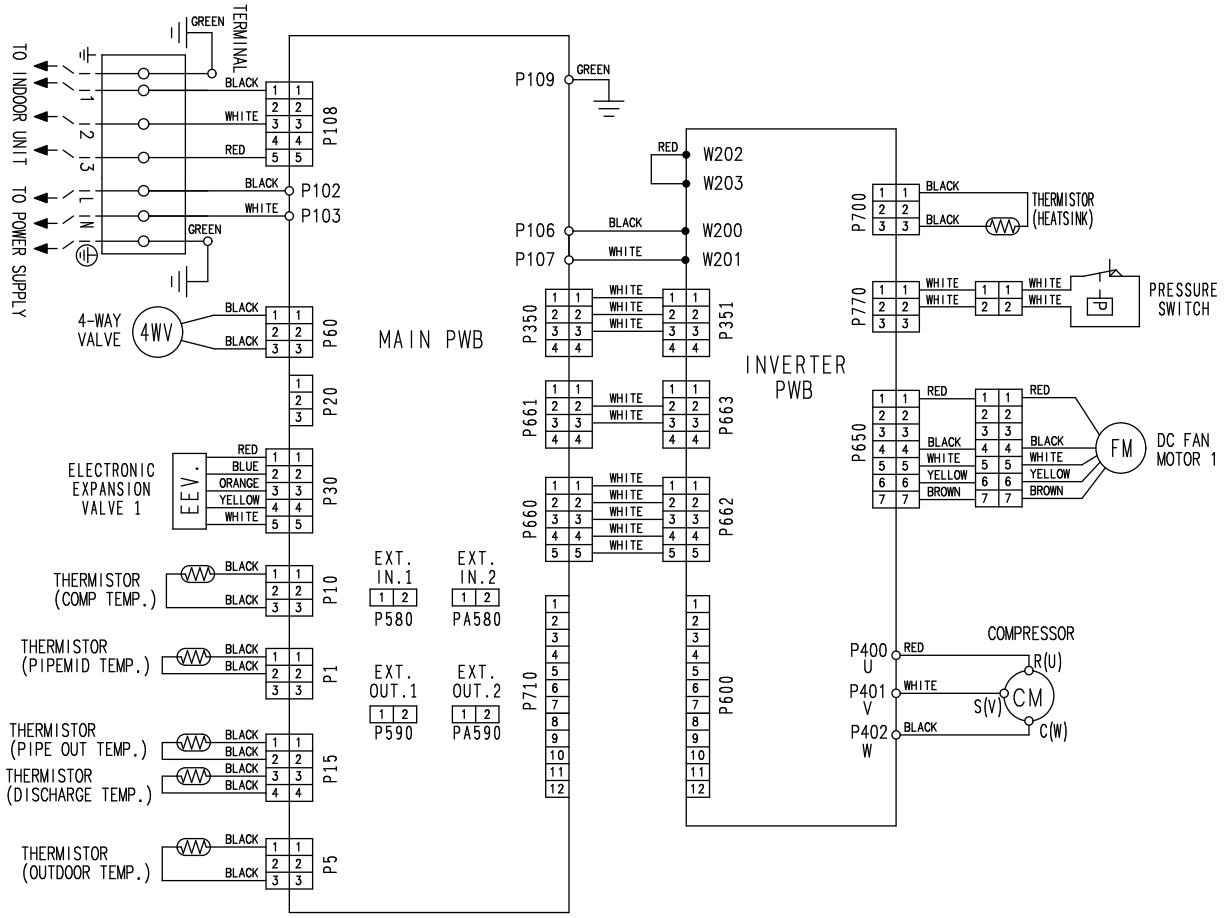

8. PC board diagrams

8-1. Models: ASHH30KMTB and ASHH36KMTB

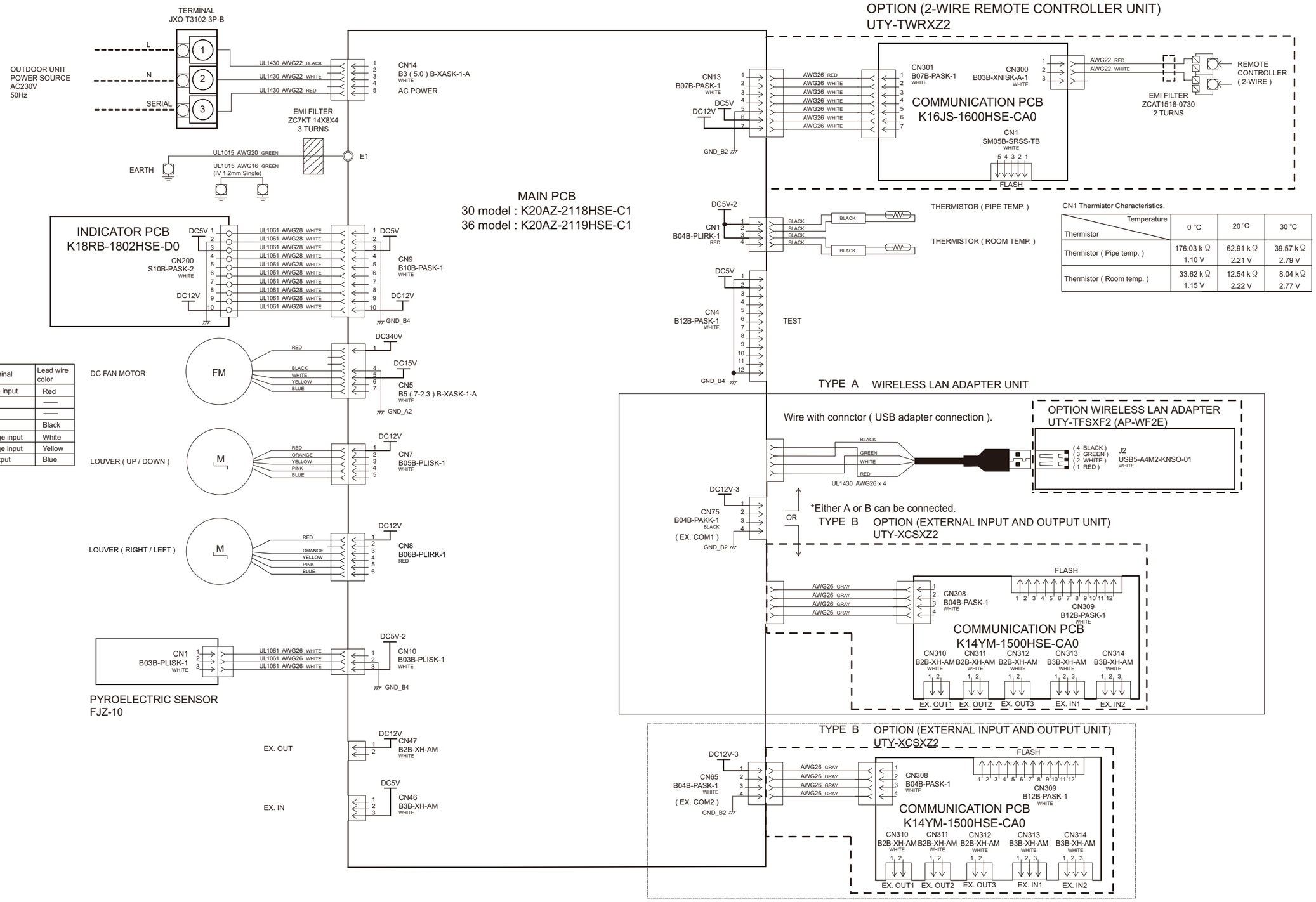

CN1 Thermistor Characteristics.

Thermistor \ Temperature	0 ℃	20 ℃	30 ℃
Thermistor (Pipe temp.)	176.03 k Ω 1.10 V	62.91 k Ω 2.21 V	39.57 k Ω 2.79 V
Thermistor (Room temp.)	33.62 k Ω 1.15 V	12.54 k Ω 2.22 V	8.04 k Ω 2.77 V

CN5 DC Fan motor

Pin No.	Terminal code	Function of terminal	Lead wire color
1	Vm	Motor power voltage input	Red
2	——	——	——
3	——	——	——
4	GND	GND	Black
5	Vcc	Control power voltage input	White
6	Vsp	Speed control voltage input	Yellow
7	FG	Revolution pulse output	Blue

8-2. Models: AOHH30KMTB and AOHH36KMTB

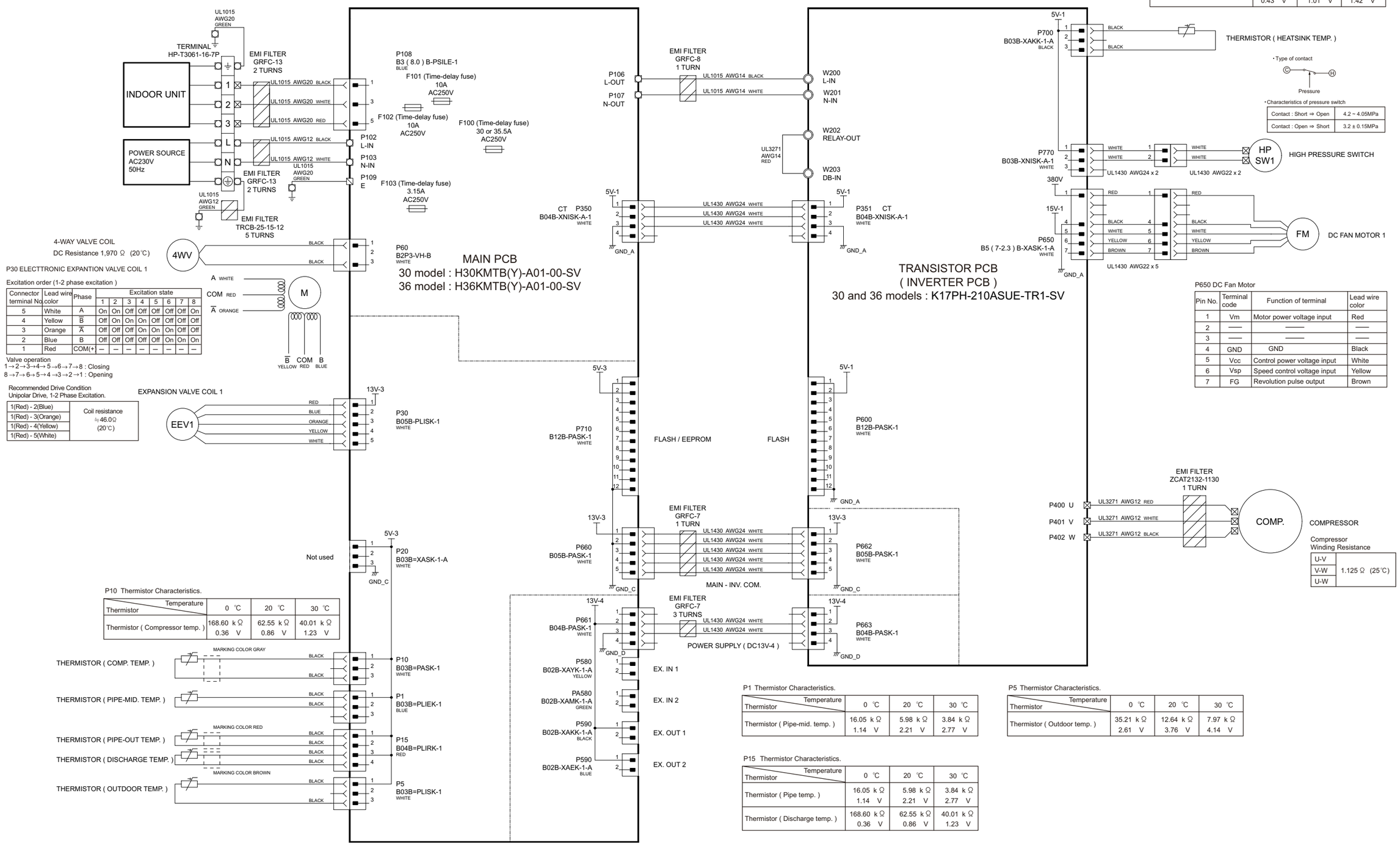

P700 Thermistor Characteristics.

Thermistor \ Temperature	0 ℃	20 ℃	30 ℃
Thermistor (Heatsink temp.)	15.83 kΩ 0.43 V	5.90 kΩ 1.01 V	3.78 kΩ 1.42 V

• Characteristics of pressure switch

Contact : Short ⇒ Open	4.2 ~ 4.05MPa
Contact : Open ⇒ Short	3.2 ± 0.15MPa

Connector terminal No.	Lead wire color	Phase	Excitation state							
			1	2	3	4	5	6	7	8
5	White	A	On	On	Off	Off	Off	Off	Off	On
4	Yellow	$\overline{B}$	Off	On	On	On	Off	Off	Off	Off
3	Orange	$\overline{A}$	Off	Off	Off	On	On	On	Off	Off
2	Blue	B	Off	Off	Off	Off	Off	On	On	On
1	Red	COM(+)	—	—	—	—	—	—	—	—

1(Red) - 2(Blue)	Coil resistance ≒46.0Ω (20℃)
1(Red) - 3(Orange)	
1(Red) - 4(Yellow)	
1(Red) - 5(White)	

P10 Thermistor Characteristics.

Thermistor \ Temperature	0 ℃	20 ℃	30 ℃
Thermistor (Compressor temp.)	168.60 kΩ 0.36 V	62.55 kΩ 0.86 V	40.01 kΩ 1.23 V

P650 DC Fan Motor

Pin No.	Terminal code	Function of terminal	Lead wire color
1	Vm	Motor power voltage input	Red
2	——	——	——
3	——	——	——
4	GND	GND	Black
5	Vcc	Control power voltage input	White
6	Vsp	Speed control voltage input	Yellow
7	FG	Revolution pulse output	Brown

P1 Thermistor Characteristics.

Thermistor \ Temperature	0 ℃	20 ℃	30 ℃
Thermistor (Pipe-mid. temp.)	16.05 kΩ 1.14 V	5.98 kΩ 2.21 V	3.84 kΩ 2.77 V

P5 Thermistor Characteristics.

Thermistor \ Temperature	0 ℃	20 ℃	30 ℃
Thermistor (Outdoor temp.)	35.21 kΩ 2.61 V	12.64 kΩ 3.76 V	7.97 kΩ 4.14 V

P15 Thermistor Characteristics.

Thermistor \ Temperature	0 ℃	20 ℃	30 ℃
Thermistor (Pipe temp.)	16.05 kΩ 1.14 V	5.98 kΩ 2.21 V	3.84 kΩ 2.77 V
Thermistor (Discharge temp.)	168.60 kΩ 0.36 V	62.55 kΩ 0.86 V	40.01 kΩ 1.23 V

Compressor Winding Resistance

U-V	1.125 Ω (25℃)
V-W	
U-W	

3. TROUBLESHOOTING

CONTENTS

3. TROUBLESHOOTING

1. Error code 03-1

1-1. How to check the error memory.....03-1
1-2. How to erase the error memory 03-1
1-3. Error code table (Indoor unit and wired remote controller).....03-2
1-4. Error code table (Outdoor unit) 03-3

2. Troubleshooting with error code 03-5

2-1. E: 11. Serial communication error (Serial reverse transfer error) (Outdoor unit).....03-5
2-2. E: 11. Serial communication error (Serial forward transfer error) (Indoor unit) 03-7
2-3. E: 12. Wired remote controller communication error (Indoor unit) 03-9
2-4. E: 22. Indoor unit capacity error (Indoor unit) 03-10
2-5. E: 32. Indoor unit main PCB error (Indoor unit) 03-11
2-6. E: 35. MANUAL AUTO button error (Indoor unit).....03-12
2-7. E: 41. Room temperature sensor error (Indoor unit).....03-13
2-8. E: 42. Indoor unit heat exchanger sensor error (Indoor unit) 03-14
2-9. E: 44. Human sensor error 03-15
2-10. E: 51. Indoor unit fan motor error (Indoor unit) 03-16
2-11. E: 62. Outdoor unit main PCB error (Outdoor unit).....03-17
2-12. E: 63. Inverter error (Outdoor unit).....03-18
2-13. E: 64. PFC circuit error (Outdoor unit) 03-19
2-14. E: 65. Trip terminal L error (Outdoor unit).....03-20
2-15. E: 71. Discharge thermistor error (Outdoor unit).....03-21
2-16. E: 73. Heat exchanger (Middle/Outlet) temperature thermistor error (Outdoor unit)...03-22
2-17. E: 74. Outdoor temperature thermistor error (Outdoor unit).....03-23
2-18. E: 77. Heat sink thermistor error (Outdoor unit) 03-24
2-19. E: 84. Current sensor error (Outdoor unit).....03-25
2-20. E: 86. High pressure switch error (Outdoor unit) 03-26
2-21. E: 94. Trip detection (Outdoor unit).....03-27
2-22. E: 95. Compressor motor control error (Outdoor unit) 03-28
2-23. E: 97. Outdoor unit fan motor error (Outdoor unit).....03-29
2-24. E: 99. 4-way valve error (Outdoor unit).....03-31
2-25. E: A1. Discharge temperature error (Outdoor unit).....03-33
2-26. E: AC. Heat sink temperature error (Outdoor unit) 03-35

3. Troubleshooting without error code.....03-36

3-1. Indoor unit—No power.....03-36
3-2. Outdoor unit—No power.....03-37
3-3. No operation (Power is on).....03-38
3-4. No cooling/No heating 03-39
3-5. Abnormal noise.....03-41
3-6. Water leaking.....03-42

4. Service parts information 03-43

4-1. Compressor.....03-43

CONTENTS (continued)

4-2. Inverter compressor.....03-44
4-3. Outdoor unit Electronic Expansion Valve (EEV).....03-45
4-4. Indoor unit fan motor 03-47
4-5. Outdoor unit fan motor 03-48
4-6. Pressure switch 03-49
4-7. 4-way valve coil (solenoid coil)/4-way valve 03-50

5. Thermistor resistance values.....03-51

5-1. Indoor unit 03-51
5-2. Outdoor unit.....03-52

1. Error code

When a problem occurs in the system or the connected device, the error content is notified by displaying the code.

NOTE: This function is only available in a system with indoor or IR receiver units equipped with indicator lamps to show the error content.

Errors, once displayed, will be automatically stored in the PC board of the indoor unit. Even if the power is disconnected, the memory containing the error history will not be erased.

If another error occurs later, the stored error memory will be updated automatically and replaced with the new one. (Previous error will be erased.)

1-1. How to check the error memory

When an error occurs, the operation lamp (Green) and the timer lamp (Orange) indicate the error content by blinking. To check the error memory, follow the procedures below.

1. Stop the operation of the air conditioner, and then disconnect the power supply.
2. Reconnect the power supply.
3. In one of the following two methods, the memorized error is only displayed during the “3 minutes ST”* state period.
   - Start the operation and then press the TEST RUN button on the remote controller.
   - Press the MANUAL AUTO button on the indoor unit for 10 seconds or more.

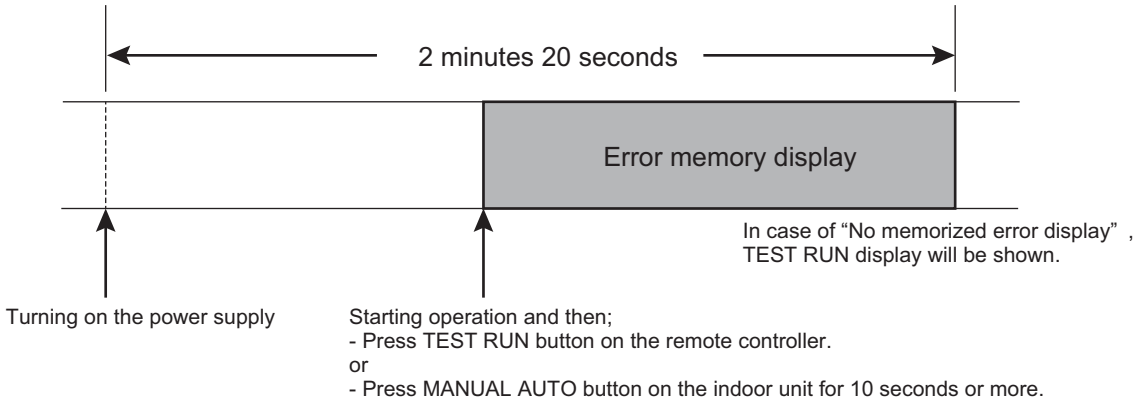

*: The “3 minutes ST” period lasts 2 minutes and 20 seconds after turning on the power supply.

1-2. How to erase the error memory

The error memory can be erased in one of the following two methods.

- Manual erase: Pressing the MANUAL AUTO button on the indoor unit while the “Error memory display” is being shown. (Short beep emits for about 3 seconds.)

- Automatic erase: After continuing the normal operation of the air conditioner without error for 2 hours or longer after displaying the error memory as described in How to check the error memory. (Except FAN operation mode.)

1-3. Error code table (Indoor unit and wired remote controller)

The operation, timer, and economy indicators operate according to the error contents.
For confirmation of the error contents, refer the flashing pattern as follows.

Error contents	Indoor unit display			Wired remote controller display
	Operation [I] (Green)	Timer [⏲] (Orange)	Economy [⌂] (Green)	
E: 11. Serial communication error (Serial reverse transfer error) (Outdoor unit)	1 times	1 times	Continuous	11
E: 11. Serial communication error (Serial forward transfer error) (Indoor unit)	1 times	1 times	Continuous	11
E: 12. Wired remote controller communication error (Indoor unit)	1 times	2 times	Continuous	12
E: 22. Indoor unit capacity error (Indoor unit)	2 times	2 times	Continuous	22
E: 32. Indoor unit main PCB error (Indoor unit)	3 times	2 times	Continuous	32
E: 35. MANUAL AUTO button error (Indoor unit)	3 times	5 times	Continuous	35
E: 41. Room temperature sensor error (Indoor unit)	4 times	1 times	Continuous	41
E: 42. Indoor unit heat exchanger sensor error (Indoor unit)	4 times	2 times	Continuous	42
E: 44. Human sensor error	4 times	4 times	Continuous	44
E: 51. Indoor unit fan motor error (Indoor unit)	5 times	1 times	Continuous	51
E: 62. Outdoor unit main PCB error (Outdoor unit)	6 times	2 times	Continuous	62
E: 63. Inverter error (Outdoor unit)	6 times	3 times	Continuous	63
E: 64. PFC circuit error (Outdoor unit)	6 times	4 times	Continuous	64
E: 65. Trip terminal L error (Outdoor unit)	6 times	5 times	Continuous	65
E: 71. Discharge thermistor error (Outdoor unit)	7 times	1 times	Continuous	71
E: 73. Heat exchanger (Middle/Outlet) temperature thermistor error (Outdoor unit)	7 times	3 times	Continuous	73
E: 74. Outdoor temperature thermistor error (Outdoor unit)	7 times	4 times	Continuous	74
E: 77. Heat sink thermistor error (Outdoor unit)	7 times	7 times	Continuous	77
E: 84. Current sensor error (Outdoor unit)	8 times	4 times	Continuous	84
E: 86. High pressure switch error (Outdoor unit)	8 times	6 times	Continuous	86
E: 94. Trip detection (Outdoor unit)	9 times	4 times	Continuous	94
E: 95. Compressor motor control error (Outdoor unit)	9 times	5 times	Continuous	95
E: 97. Outdoor unit fan motor error (Outdoor unit)	9 times	7 times	Continuous	97
E: 99. 4-way valve error (Outdoor unit)	9 times	9 times	Continuous	99
E: A1. Discharge temperature error (Outdoor unit)	10 times	1 times	Continuous	A1
E: AC. Heat sink temperature error (Outdoor unit)	10 times	12 times	Continuous	AC

TROUBLESHOOTING

1-4. Error code table (Outdoor unit)

The operation status is determined by the lighting up and blinking of the LED lamp.
After check that ERROR LED lamp blinks, press the ENTER button once.

NOTE: For the positions of LED lamp and buttons, refer to "Function settings (for outdoor unit)" in Chapter 5. FIELD WORKING on page 05-8.

Error contents	POWER/ MODE	ERROR	PUMP DOWN	LOW NOISE		PEAK CUT		
			L1	L2	L3	L4	L5	L6
E: 11. Serial communication error (Serial forward transfer error) (Indoor unit)	■ 2	●	■ 1	■ 1	○	○	●	●
E: 11. Serial communication error (Serial forward transfer error) (Indoor unit)	■ 2	●	■ 1	■ 1	○	●	○	○
E: 12. Wired remote controller communication error (Indoor unit)	■ 2	●	■ 5	■ 15	○	○	○	●
E: 32. Indoor unit main PCB error (Indoor unit)	■ 2	●	■ 5	■ 15	○	○	○	●
E: 35. MANUAL AUTO button error (Indoor unit)	■ 2	●	■ 5	■ 15	○	○	○	●
E: 41. Room temperature sensor error (Indoor unit)	■ 2	●	■ 5	■ 15	○	○	○	●
E: 42. Indoor unit heat exchanger sensor error (Indoor unit)	■ 2	●	■ 5	■ 15	○	○	○	●
E: 44. Human sensor error	■ 2	●	■ 5	■ 15	○	○	○	●
E: 51. Indoor unit fan motor error (Indoor unit)	■ 2	●	■ 5	■ 15	○	○	○	●
E: 62. Outdoor unit main PCB error (Outdoor unit)	■ 2	●	■ 6	■ 2	○	○	○	●
E: 63. Inverter error (Outdoor unit)	■ 2	●	■ 6	■ 3	○	○	○	●
E: 71. Discharge thermistor error (Outdoor unit)	■ 2	●	■ 7	■ 1	○	○	○	●
E: 73. Heat exchanger (Middle/Outlet) temperature thermistor error (Outdoor unit)	■ 2	●	■ 7	■ 3	○	○	●	○
E: 74. Outdoor temperature thermistor error (Outdoor unit)	■ 2	●	■ 7	■ 4	○	○	○	●
E: 77. Heat sink thermistor error (Outdoor unit)	■ 2	●	■ 7	■ 7	○	○	○	●
E: 84. Current sensor error (Outdoor unit)	■ 2	●	■ 8	■ 4	○	○	○	●
E: 86. High pressure switch error (Outdoor unit)	■ 2	●	■ 8	■ 6	○	●	●	○
E: 94. Trip detection (Outdoor unit)	■ 2	●	■ 9	■ 4	○	○	○	●
E: 95. Compressor motor control error (Outdoor unit)	■ 2	●	■ 9	■ 5	○	○	○	●
E: 97. Outdoor unit fan motor error (Outdoor unit)	■ 2	●	■ 9	■ 7	○	○	●	●
E: 99. 4-way valve error (Outdoor unit)	■ 2	●	■ 9	■ 9	○	○	○	●
E: A1. Discharge temperature error (Outdoor unit)	■ 2	●	■ 10	■ 1	○	○	○	●
E: AC. Heat sink temperature error (Outdoor unit)	■ 2	●	■ 10	■ 12	○	○	●	●

TROUBLESHOOTING

● : Light on ○ : Light off ■ (n) : n Times blinking

TROUBLESHOOTING

2. Troubleshooting with error code

2-1. E: 11. Serial communication error (Serial reverse transfer error) (Outdoor unit)

Indicator	Indoor unit	Operation indicator	1 time flash
		Timer indicator	1 time flash
		Economy indicator	Continuous flash
		Error code	E: 11
	Outdoor unit		Refer to "Error code table (Outdoor unit)" on page 03-3
Detective actuator	Outdoor unit	Main PCB	When the indoor unit cannot receive the serial signal from outdoor unit more than 2 minutes after power on, or the indoor unit cannot receive the serial signal more than 15 seconds during normal operation.
		Fan motor	
Forecast of cause			Connection failure
			External cause
			Main PCB failure
			Outdoor unit fan motor failure

Check point 1. Reset the power and operate

Does error indication show again?
→ If no, go to "Check point 1-2".

↓

Check point 2. Check connection

Check any loose or removed connection line of indoor unit and outdoor unit.
Check connection condition is control unit. (If there is loose connector, open cable or mis-wiring.)
→ If there is an abnormal condition, correct it by referring to the installation manual or the “DESIGN & TECHNICAL MANUAL”.

↓

Check point 3. Check the voltage of power supply

Check the voltage of power supply
Check if AC 198 V (AC 220 V -10%) to AC 264 V (AC 240 V +10%) appears at outdoor unit terminal L—N.

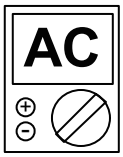

↓

Check point 4. Check serial signal (Reverse transfer signal)
Check serial signal (Reverse transfer signal) 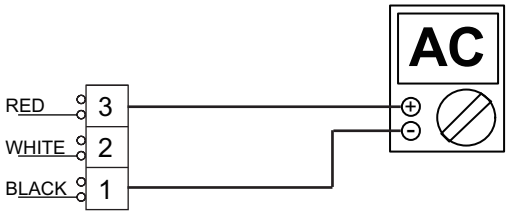   • Check if indicated value swings between AC 90 V and AC 270 V at the outdoor unit terminal 1 —3. • If it is abnormal, check the parts below. – Outdoor unit fan motor in "Service parts information" on page 03-43 • If outdoor fan motor is abnormal, replace outdoor unit fan motor and main PCB. • If the checked parts are normal, replace the main PCB.

↓

End

Check point 1-2. Check external cause such as noise
• Check the complete insulation of the grounding. • Check if there is any equipment that causes harmonic wave near the power cable (Neon light bulb or any electronic equipment which causes harmonic wave).

↓

End

2-2. E: 11. Serial communication error (Serial forward transfer error) (Indoor unit)

Indicator	Indoor unit	Operation indicator	1 time flash
		Timer indicator	1 time flash
		Economy indicator	Continuous flash
		Error code	E: 11
	outdoor unit		Refer to "Error code table (Outdoor unit)" on page 03-3
Detective actuator	Indoor unit	Main PCB	When the outdoor unit cannot receive the serial signal from indoor unit more than 10 seconds.
		Fan motor	
	Outdoor unit	Main PCB	
Forecast of cause			Connection failure
			External cause
			Main PCB failure
			Indoor unit fan motor failure
			Outdoor unit Main PCB

Check point 1. Reset the power and operate

Does error indication show again?
→ If no, go to "Check point 1-2".

↓

Check point 2. Check connection

Check any loose or removed connection line of indoor unit and outdoor unit.
Check connection condition is control unit. (If there is loose connector, open cable or mis-wiring.)
→ If there is an abnormal condition, correct it by referring to the installation manual or the “DESIGN & TECHNICAL MANUAL”.

↓

Check point 3. Check the voltage of power supply

Check the voltage of power supply
Check if AC 198 V (AC 220 V -10%) to AC 264 V (AC 240 V +10%) appears at outdoor unit terminal L—N.

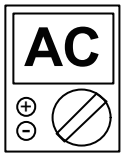

↓

TROUBLESHOOTING

Check point 4. Check serial signal (Forward transfer signal)
Check serial signal (Forward transfer signal)

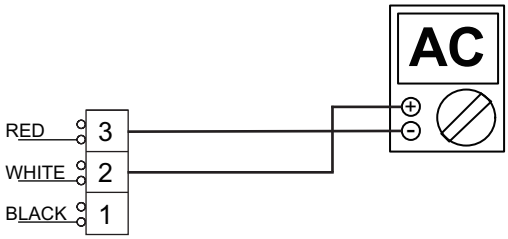

- Check if indicated value swings between AC 30 V and AC 130 V at outdoor unit terminal 2—3.
- If it is abnormal, replace main PCB.
- If it is abnormal, check indoor unit fan motor. (Indoor unit fan motor in "Service parts information" on page 03-43)
- If indoor unit fan motor is abnormal, replace indoor unit fan motor and main PCB.
- If it is abnormal, replace outdoor unit main PCB.

↓

End

Check point 1-2. Check external cause such as noise
• Check the complete insulation of the grounding. • Check if there is any equipment that causes harmonic wave near the power cable (Neon light bulb or any electronic equipment which causes harmonic wave).

↓

End

2-3. E: 12. Wired remote controller communication error (Indoor unit)

Indicator	Indoor unit	Operation indicator	1 time flash
		Timer indicator	2 time flash
		Economy indicator	Continuous flash
		Error code	E: 12
	outdoor unit		Refer to "Error code table (Outdoor unit)" on page 03-3
Detective actuator	Indoor unit	Main PCB	When the indoor unit cannot receive the signal from Wired remote controller more than 1 minute during normal operation.
	Wired remote control		
Forecast of cause			Terminal connection abnormal
			Wired remote control failure
			Main PCB failure

Check point 1. Check the connection of terminal

After turning off the power, check & correct the followings.

- Check the connection of terminal between remote controller and indoor unit, and check if there is a disconnection of the cable.

↓

Check point 2. Check connection

Check voltage at CN14 of main PCB (terminal 1—3). (Power supply to the remote controller)

Upon correcting the removed connector or mis-wiring, reset the power.

- If it is DC 12 V, remote controller is failure. (Main PCB is normal)
  - Replace Remote Control
- If it is DC 0 V, main PCB is failure. (Check remote controller once again)
  - Replace main PCB

↓

End

2-4. E: 22. Indoor unit capacity error (Indoor unit)

Indicator	Indoor unit	Operation indicator	2 time flash
		Timer indicator	2 time flash
		Economy indicator	Continuous flash
		Error code	E: 22
	outdoor unit		Refer to "Error code table (Outdoor unit)" on page 03-3
Detective actuator	Indoor unit main PCB		When the total capacity of the indoor units does not match outdoor unit capacity while 3 minutes after power on.
Forecast of cause			Indoor unit selection is incorrect.
			Main PCB failure

Check point 1. Check the total capacity of indoor units
Check the total capacity of the indoor units. → If abnormal condition is found, correct it referring to the installation manual or DESIGN & TECHNICAL MANUAL.

↓

Check point 2. Replace the main PCB
If check point 1 does not improve the symptom, replace the main PCB.

↓

End

TROUBLESHOOTING

2-5. E: 32. Indoor unit main PCB error (Indoor unit)

Indicator	Indoor unit	Operation indicator	3 time flash
		Timer indicator	2 time flash
		Economy indicator	Continuous flash
		Error code	E: 32
	Outdoor unit		Refer to "Error code table (Outdoor unit)" on page 03-3
Detective actuator	Indoor unit	Main PCB	When power is on and there is some below case. 1. When model information of EEPROM is incorrect. 2. When the access to EEPROM failed.
Forecast of cause			External cause
			Defective connection of electrical components
			Main PCB failure

Check point 1. Reset power supply and operate
Does error indication show again? → If no, go to "Check point 1-2".

↓

Check point 2. Check Indoor unit electrical components
• Check all connectors. (loose connector or incorrect wiring) • Check any shortage or corrosion on PCB.

↓

Check point 3. Replace the main PCB
Replace the main PCB.

↓

End

Check point 1-2. Check external cause such as noise
• Check if the ground connection is proper. • Check if there is any equipment that causes harmonic wave near the power cable (Neon light bulb or any electronic equipment which causes harmonic wave).

↓

End

NOTE: EEPROM

EEPROM (Electronically Erasable and Programmable Read Only Memory) is a non-volatile memory which keeps memorized information even if the power is turned off. It can change the contents electronically. To change the contents, it uses higher voltage than normal, and it cannot change a partial contents. (Rewriting shall be done upon erasing the all contents.) There is a limit in a number of rewriting.

TROUBLESHOOTING

2-6. E: 35. MANUAL AUTO button error (Indoor unit)

Indicator	Indoor unit	Operation indicator	3 time flash
		Timer indicator	5 time flash
		Economy indicator	Continuous flash
		Error code	E: 35
	Outdoor unit		Refer to "Error code table (Outdoor unit)" on page 03-3
Detective actuator	Indoor unit controller PCB		When the MANUAL AUTO button becomes on for consecutive 60 or more seconds.
	Indicator PCB		
	Manual auto switch		
Forecast of cause			MANUAL AUTO button failure
			Controller PCB and indicator PCB failure

Check point 1. Check the MANUAL AUTO button

- Check if MANUAL AUTO button is kept pressed.
- Check ON/OFF switching operation by using a meter.

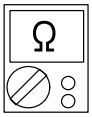

If MANUAL AUTO button is disabled (ON/OFF switching), replace it.

↓

Check point 2. Replace the main PCB and indicator PCB

If Check Point 1 does not improve the symptom, replace the main PCB and indicator PCB.

↓

End

TROUBLESHOOTING

2-7. E: 41. Room temperature sensor error (Indoor unit)

Indicator	Indoor unit	Operation indicator	4 time flash
		Timer indicator	1 time flash
		Economy indicator	Continuous flash
		Error code	E: 41
	Outdoor unit		Refer to "Error code table (Outdoor unit)" on page 03-3
Detective actuator	Indoor unit main PCB		Room temperature thermistor is open or short is detected always.
	Room temperature thermistor		
Forecast of cause			Connector failure
			Thermistor failure
			Main PCB failure

Check point 1. Check connection of connector

- Check if connector is loose or removed.
- Check erroneous connection.
- Check if thermistor cable is open

-> Reset power when reinstalling due to removed connector or incorrect wiring.

↓

Check point 2. Remove connector and check thermistor resistance value

- For the room thermistor resistance value, refer to "Thermistor resistance values" on page 03-51.
- If thermistor is either open or shorted, replace it and reset the power.

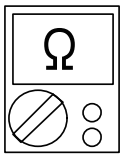

↓

Check point 3. Check voltage of main PCB

Make sure circuit diagram of each indoor unit and check terminal voltage at thermistor (DC 5.0 V).

NOTE: For details of thermistor connector, refer to "Wiring diagrams" in Chapter 2. TECHNICAL DATA AND PARTS LIST on page 02-15.

If the voltage does not appear, replace main PCB.

↓

End

2-8. E: 42. Indoor unit heat exchanger sensor error (Indoor unit)

Indicator	Indoor unit	Operation indicator	4 time flash
		Timer indicator	2 time flash
		Economy indicator	Continuous flash
		Error code	E: 42
	Outdoor unit		Refer to "Error code table (Outdoor unit)" on page 03-3
Detective actuator	Indoor unit main PCB		When heat exchanger temperature thermistor open or short circuit is detected.
	Heat exchanger temperature thermistor		
Forecast of cause			Connector connection failure
			Thermistor failure
			Main PCB failure

TROUBLESHOOTING

TROUBLESHOOTING

Check point 1. Check connection of connector

- Check if connector is loose or removed.
- Check erroneous connection.
- Check if thermistor cable is open

-> Reset power when reinstalling due to removed connector or incorrect wiring.

↓

Check point 2. Remove connector and check thermistor resistance value

- For the heat exchanger thermistor resistance value, refer to "Thermistor resistance values" on page 03-51.
- If thermistor is either open or shorted, replace it and reset the power.

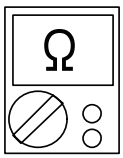

↓

Check point 3. Check voltage of main PCB

Make sure circuit diagram of each indoor unit and check terminal voltage at thermistor (DC 5.0 V).

NOTE: For details of thermistor connector, refer to "Wiring diagrams" in Chapter 2. TECHNICAL DATA AND PARTS LIST on page 02-15.

If the voltage does not appear, replace main PCB.

↓

End

2-9. E: 44. Human sensor error

Indicator	Indoor unit	Operation indicator	4 time flash
		Timer indicator	4 time flash
		Economy indicator	Continuous flash
		Error code	E: 44
	Outdoor unit		Refer to "Error code table (Outdoor unit)" on page 03-3
Detective actuator	Indoor unit main PCB		1. Detect the open condition of the sensor. 2. When signal from sensor is "L" (0 V) for more than 20 min.
Forecast of cause			Connector connection failure
			Sensor failure
			Main PCB failure

Check point 1. Check the connector connection and cable open

- Check if connector is loose or removed.
- Check erroneous connection.
- Check if sensor cable is open
  → Reset power when reinstalling due to removed connector or incorrect wiring.

↓

Check point 2. Check the conduction or voltage

- **Conduction check (sensor connections error)**
  Disconnect the sensor and check the 2-3 pin on sensor connector.
  → With conduction: Sensor failure
  → Without conduction: Main PCB failure

- **Voltage check (sensor signal error)**
  Disconnect the sensor and check the voltage of 3 pin of the CN10 on the main PCB.
  → 5 V: Sensor failure
  → Other than 5 V: Main PCB failure

↓

End

2-10. E: 51. Indoor unit fan motor error (Indoor unit)

Indicator	Indoor unit	Operation indicator	5 time flash
		Timer indicator	1 time flash
		Economy indicator	Continuous flash
		Error code	E: 51
	Outdoor unit		Refer to "Error code table (Outdoor unit)" on page 03-3
Detective actuator	Indoor unit	Main PCB	When the actual rotation number of the indoor unit fan motor is below 1/3 of the target rotation number continuously for more than 56 seconds.
		Fan motor	
Forecast of cause			Fan rotation failure
			Fan motor winding open
			Motor protection by surrounding temperature rise
			Control PCB failure
			Indoor unit fan motor failure

Check point 1. Check rotation of fan
Rotate the fan by hand when operation is off. (Check if fan is caught, dropped off or locked motor) → If fan or bearing is abnormal, replace it.

↓

Check point 2. Check ambient temperature around motor
Check excessively high temperature around the motor. (If there is any surrounding equipment that causes heat) → Upon the temperature coming down, restart operation.

↓

Check point 3. Check indoor unit fan motor
Check Indoor unit fan motor. (Refer to indoor unit fan motor in "Service parts information" on page 03-43.) → If Indoor unit fan motor is abnormal, replace Indoor unit fan motor.

↓

Check point 4. Replace the main PCB
If Check Point 1 to 3 do not improve the symptom, replace the main PCB.

↓

End

2-11. E: 62. Outdoor unit main PCB error (Outdoor unit)

Indicator	Indoor unit	Operation indicator	6 time flash
		Timer indicator	2 time flash
		Economy indicator	Continuous flash
		Error code	E: 62
	Outdoor unit		Refer to "Error code table (Outdoor unit)" on page 03-3
Detective actuator	Outdoor unit	Main PCB	Access to EEPROM failed due to some cause after outdoor unit started.
Forecast of cause			External cause (Noise, temporary open, voltage drop)
			Main PCB failure

Check point 1. Reset power supply and operate
Does error indication show again?

If no, go to "Check point 1-2".

↓

Check point 2. Replace the main PCB
Replace the main PCB.

↓

End

Check point 1-2. Check external cause
• Check if temporary voltage drop was not generated. • Check if momentary open was not generated. • Check if ground is connection correctly or there are no related cables near the power line.

↓

End

TROUBLESHOOTING

2-12. E: 63. Inverter error (Outdoor unit)

Indicator	Indoor unit	Operation indicator	6 time flash
		Timer indicator	3 time flash
		Economy indicator	Continuous flash
		Error code	E: 63
	Outdoor unit		Refer to "Error code table (Outdoor unit)" on page 03-3
Detective actuator	Outdoor unit	Inverter PCB	Error information received from inverter PCB
Forecast of cause			External cause
			Power supply to inverter PCB wiring disconnection or open
			Inverter PCB failure

Check point 1. Turn the power on again?
Error displayed again?

If no, go to "Check point 1-2".

↓

Check point 2. Check the wiring (power supply to inverter PCB)
• Connector and wiring connection state check • Cable open check

↓

Check point 3. Replace inverter PCB
Replace inverter PCB

↓

End

Check point 1-2. Check external cause
• Check if temporary voltage drop was not generated. • Check if momentary open was not generated. • Check if ground is connection correctly or there are no related cables near the power line.

↓

End

2-13. E: 64. PFC circuit error (Outdoor unit)

Indicator	Indoor unit	Operation indicator	6 time flash
		Timer indicator	4 time flash
		Economy indicator	Continuous flash
		Error code	E: 64
	Outdoor unit		Refer to "Error code table (Outdoor unit)" on page 03-3
Detective actuator	Outdoor unit	Main PCB	• When inverter input DC voltage is higher than 420 V for over 3 seconds, the compressor stops. • If the same operation is repeated 5 times, the compressor stops permanently.
Forecast of cause			External cause
			Connector connection failure
			Main PCB failure

Check point 1. Check external cause at indoor and outdoor (Voltage drop or Noise)

- Instant drop: Check if there is a large load electric apparatus in the same circuit.
- Momentary power failure: Check if there is a defective contact or leak current in the power supply circuit.
- Noise: Check if there is any equipment causing harmonic wave near electric line. (Neon bulb or electric equipment that may cause harmonic wave)
  Check the complete insulation of grounding.

↓

Check point 2. Check connection of Connector

- Check if connector is removed.
- Check erroneous connection.
- Check if cable is open.

→ Upon correcting the removed connector or mis-wiring, reset the power.

↓

Check point 3. Replace the main PCB

If check point 1 to 2 do not improve the symptom, replace the main PCB.

↓

End

TROUBLESHOOTING

2-14. E: 65. Trip terminal L error (Outdoor unit)

Indicator	Indoor unit	Operation indicator	6 time flash
		Timer indicator	5 time flash
		Economy indicator	Continuous flash
		Error code	E: 65
	Outdoor unit		Refer to "Error code table (Outdoor unit)" on page 03-3
Detective actuator	Outdoor unit	Main PCB	When the signal from FO terminal of IPM is “L” (0 V) during the compressor stopping.
Forecast of cause			Main PCB failure

Check point 1. Check main PCB
Replace the outdoor unit main PCB.

↓

End

TROUBLESHOOTING

2-15. E: 71. Discharge thermistor error (Outdoor unit)

Indicator	Indoor unit	Operation indicator	7 time flash
		Timer indicator	1 time flash
		Economy indicator	Continuous flash
		Error code	E: 71
	Outdoor unit		Refer to "Error code table (Outdoor unit)" on page 03-3
Detective actuator	Outdoor unit main PCB		When discharge pipe temperature thermistor open or short circuit is detected at power on or while running the compressor
	Discharge pipe temperature thermistor		
Forecast of cause			Connector failure
			Thermistor failure
			Main PCB failure

Check point 1. Check connection of connector

- Check if connector is loose or removed.
- Check erroneous connection.
- Check if thermistor cable is open

→ Reset power when reinstalling due to removed connector or incorrect wiring.

↓

Check point 2. Remove connector and check thermistor resistance value

- For the discharge temperature thermistor resistance value, refer to "Thermistor resistance values" on page 03-51.
- If thermistor is either open or shorted, replace it and reset the power.

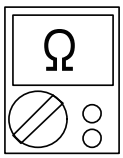

↓

Check point 3. Check voltage of main PCB

Make sure circuit diagram of outdoor unit and check terminal voltage at thermistor (DC 5.0 V).

NOTE: For details of thermistor connector, refer to "Wiring diagrams" in Chapter 2. TECHNICAL DATA AND PARTS LIST on page 02-15.

If the voltage does not appear, replace main PCB.

↓

End

2-16. E: 73. Heat exchanger (Middle/Outlet) temperature thermistor error (Outdoor unit)

Indicator	Indoor unit	Operation indicator	7 time flash
		Timer indicator	3 time flash
		Economy indicator	Continuous flash
		Error code	E: 73
	Outdoor unit		Refer to "Error code table (Outdoor unit)" on page 03-3
Detective actuator	Heat exchanger liquid temperature thermistor		• Heat exchanger liquid temperature thermistor short or open detected • Heat exchanger middle temperature thermistor short or open detected
	Heat exchanger middle temperature thermistor		
Forecast of cause			Connector failure
			Thermistor failure
			Main PCB failure

Check Point 1 : Check the connector connection and cable open

- Connector connection state check
- Cable open check

↓

Check Point 2 : Check the thermistor

- For the outdoor unit heat exchanger thermistor resistance value, refer to "Thermistor resistance values" on page 03-51.
- If thermistor is either open or shorted, replace it and reset the power.

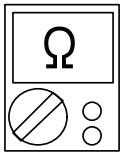

↓

Check point 3. Check voltage of main PCB

Make sure circuit diagram of outdoor unit and check terminal voltage at thermistor (DC 5.0 V).

NOTE: For details of thermistor connector, refer to "Wiring diagrams" in Chapter 2. TECHNICAL DATA AND PARTS LIST on page 02-15.

If the voltage does not appear, replace main PCB.

↓

End

2-17. E: 74. Outdoor temperature thermistor error (Outdoor unit)

Indicator	Indoor unit	Operation indicator	7 time flash
		Timer indicator	4 time flash
		Economy indicator	Continuous flash
		Error code	E: 74
	Outdoor unit		Refer to "Error code table (Outdoor unit)" on page 03-3
Detective actuator	Outdoor unit main PCB		When outdoor temperature thermistor open or short circuit is detected at power on or while running the compressor
	Outdoor temperature thermistor		
Forecast of cause			Connector failure
			Thermistor failure
			Main PCB failure

TROUBLESHOOTING

Check point 1. Check connection of connector

- Check if connector is loose or removed.
- Check erroneous connection.
- Check if thermistor cable is open

-> Reset power when reinstalling due to removed connector or incorrect wiring.

↓

Check point 2. Remove connector and check thermistor resistance value

- For the outdoor temperature thermistor resistance value, refer to "Thermistor resistance values" on page 03-51.
- If thermistor is either open or shorted, replace it and reset the power.

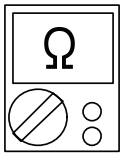

↓

Check point 3. Check voltage of main PCB

Make sure circuit diagram of outdoor unit and check terminal voltage at thermistor (DC 5.0 V).

NOTE: For details of thermistor connector, refer to "Wiring diagrams" in Chapter 2. TECHNICAL DATA AND PARTS LIST on page 02-15.

If the voltage does not appear, replace main PCB.

↓

End

2-18. E: 77. Heat sink thermistor error (Outdoor unit)

Indicator	Indoor unit	Operation indicator	7 time flash
		Timer indicator	7 time flash
		Economy indicator	Continuous flash
		Error code	E: 77
	Outdoor unit		Refer to "Error code table (Outdoor unit)" on page 03-3
Detective actuator	Heat sink temperature thermistor		Heat sink temperature thermistor short or open detected
Forecast of cause			Connector failure
			Thermistor failure
			Inverter PCB failure

TROUBLESHOOTING

Check point 1. Check connection of connector

- Check if connector is loose or removed.
- Check erroneous connection.
- Check if thermistor cable is open

-> Reset power when reinstalling due to removed connector or incorrect wiring.

↓

Check point 2. Remove connector and check thermistor resistance value

- For the Heat sink thermistor resistance value, refer to "Thermistor resistance values" on page 03-51.
- If thermistor is either open or shorted, replace it and reset the power.

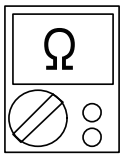

↓

Check point 3. Check voltage of inverter PCB

Make sure circuit diagram of outdoor unit and check terminal voltage at thermistor (DC 5.0 V).

NOTE: For details of thermistor connector, refer to "Wiring diagrams" in Chapter 2. TECHNICAL DATA AND PARTS LIST on page 02-15.

If the voltage does not appear, replace inverter PCB.

↓

End

2-19. E: 84. Current sensor error (Outdoor unit)

Indicator	Indoor unit	Operation indicator	8 time flash
		Timer indicator	4 time flash
		Economy indicator	Continuous flash
		Error code	E: 84
	Outdoor unit		Refer to "Error code table (Outdoor unit)" on page 03-3
Detective actuator	Outdoor unit	Main PCB	When input current sensor has detected 0 A, while inverter compressor is operating at higher than 56 rps, after 1 minute upon starting the compressor. (Except during the defrost operation)
Forecast of cause			Defective connection of electrical components
			External cause
			Main PCB failure

Check point 1. Reset power supply and operate

Does error indication show again?

If no, go to "Check point 1-2".

↓

Check point 2. Check connections of outdoor unit electrical components

- Check if the terminal connection is loose.
- Check if connector is removed.
- Check erroneous connection.
- Check if cable is open.

Upon correcting the removed connector or mis-wiring, reset the power.

↓

Check point 3. Replace the main PCB

If Check point 1, 2 do not improve the symptom, replace the main PCB.

↓

End

Check point 1-2. Check external cause at Indoor and Outdoor (Voltage drop or Noise)

- Instant drop: Check if there is a large load electric apparatus in the same circuit.
- Momentary power failure: Check if there is a defective contact or leak current in the power supply circuit.
- Noise: Check if there is any equipment causing harmonic wave near electric line. (Neon bulb or electric equipment that may cause harmonic wave)
  Check the complete insulation of grounding.

↓

End

TROUBLESHOOTING

2-20. E: 86. High pressure switch error (Outdoor unit)

Indicator	Indoor unit	Operation indicator	8 time flash
		Timer indicator	6 time flash
		Economy indicator	Continuous flash
		Error code	E: 86
	Outdoor unit		Refer to "Error code table (Outdoor unit)" on page 03-3
Detective actuator	Outdoor unit main PCB		When pressure switch open is detected in 10 seconds after the power is turned on.
	High pressure switch		
Forecast of cause			High pressure switch connector disconnection or open
			High pressure switch characteristics failure
			Main PCB failure

Check point 1. Check the high pressure switch connection state

- Check connector and wiring connection state.
- Check if cable is open

-> Reset power when reinstalling due to removed connector or incorrect wiring.

↓

Check point 2. Check the high pressure switch characteristics

- Check switch characteristics.
  For the characteristics of the high pressure switch, refer to below.

↓

Check point 3. Replace main PCB

Change main PCB and check operation again.

↓

End

- Type of contact

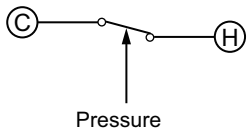

- Characteristics of pressure switch

Pressure switch 1	
Contact: Short → Open	4.2±0.1 MPa
Contact: Open → Short	3.2±0.15 MPa

30/36 model: P770

2-21. E: 94. Trip detection (Outdoor unit)

Indicator	Indoor unit	Operation indicator	9 time flash
		Timer indicator	4 time flash
		Economy indicator	Continuous flash
		Error code	E: 94
	Outdoor unit		Refer to "Error code table (Outdoor unit)" on page 03-3
Detective actuator	Outdoor unit	Inverter PCB	Protection stop by over-current generation after inverter compressor start processing completed generated consecutively 10 times. **NOTE:** The number of generations is reset when the compressor starts up.
		Main PCB	
		Compressor	
Forecast of cause			Outdoor unit fan operation defective, foreign matter on heat-exchanger, excessive rise of ambient temperature
			Main PCB failure
			Inverter compressor failure (lock, winding short)
			Inverter PCB

Check point 1. Check the outdoor unit fan operation, heat-exchanger, ambient temperature

- No obstructions in air passages?
- Heat exchange fins clogged
- Outdoor unit fan motor check
- Ambient temperature not raised by the effect of other heat sources?
- Discharged air not sucked in?

↓

Check point 2. Replace inverter PCB

If Check point 1 do not improve the symptom, change inverter PCB.

↓

Check point 3. Replace main PCB

If Check point 1, 2 do not improve the symptom, change main PCB.

↓

Check point 4. Replace compressor

If Check point 3 do not improve the symptom, change compressor.

↓

End

2-22. E: 95. Compressor motor control error (Outdoor unit)

Indicator	Indoor unit	Operation indicator	9 time flash
		Timer indicator	5 time flash
		Economy indicator	Continuous flash
		Error code	E: 95
	Outdoor unit		Refer to "Error code table (Outdoor unit)" on page 03-3
Detective actuator	Outdoor unit	Inverter PCB	1. When running the compressor, if the detected rotor location is out of phase with actual rotor location more than 105°, the compressor stops. 2. After the compressor restarts, if the same operation is repeated within 40 seconds, the compressor stops again. 3. If 1. and 2. repeats 5 times, the compressor stops permanently.
		Main PCB	
		Compressor	
Forecast of cause			Defective connection of electrical components
			Inverter PCB failure
			Main PCB failure
			Compressor failure

Check point 1. Check noise from compressor
Turn on power and check operation noise. → If an abnormal noise show, replace compressor.

↓

Check point 2. Check connection of around the compressor components
For compressor terminal, main PCB • Check if connector is removed. • Check erroneous connection. • Check if cable is open. (Refer to inverter compressor in "Service parts information" on page 03-43.) → Upon correcting the removed connector or mis-wiring, reset the power.

↓

Check point 3. Replace inverter PCB
If Check point 1, 2 do not improve the symptom, change inverter PCB.

↓

Check point 4. Replace main PCB
If Check point 1 to 3 do not improve the symptom, change main PCB.

↓

Check point 5. Replace compressor
If Check point 4 do not improve the symptom, change compressor.

↓

End

TROUBLESHOOTING

2-23. E: 97. Outdoor unit fan motor error (Outdoor unit)

Indicator	Indoor unit	Operation indicator	9 time flash
		Timer indicator	7 time flash
		Economy indicator	Continuous flash
		Error code	E: 97
	Outdoor unit		Refer to "Error code table (Outdoor unit)" on page 03-3
Detective actuator	Outdoor unit	Inverter PCB	1. When outdoor fan rotation speed is less than 100 rpm in 20 seconds after fan motor starts, fan motor stops. 2. After fan motor restarts, if the same operation within 60 seconds is repeated 3 times in a row, compressor and fan motor stops. 3. If 1. and 2. repeats 5 times in a row, compressor and fan motor stops permanently.
		Main PCB	
		Fan motor	
Forecast of cause			Fan rotation failure
			Motor protection by surrounding temperature rise
			Inverter PCB failure
			Main PCB failure
			Outdoor unit fan motor

Check point 1. Check rotation of fan
Rotate the fan by hand when operation is off. (Check if fan is caught, dropped off or locked motor) → If fan or bearing is abnormal, replace it.

↓

Check point 2. Check ambient temperature around motor
Check excessively high temperature around the motor. (If there is any surrounding equipment that causes heat) → Upon the temperature coming down, restart operation.

↓

Check point 3. Check outdoor unit fan motor
Check outdoor unit fan motor. (Refer to outdoor unit fan motor in "Service parts information" on page 03-43.) → If outdoor unit fan motor is abnormal, replace outdoor unit fan motor and main PCB.

↓

TROUBLESHOOTING

Check point 4. Check output voltage of inverter PCB

Check outdoor unit circuit diagram and the voltage. (Measure at inverter PCB side connector)

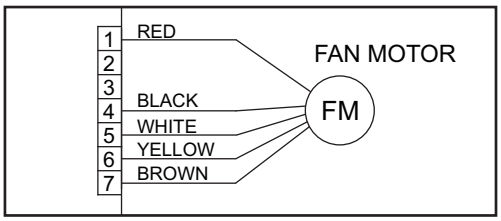

NOTE: For details of wiring diagram, refer to "Wiring diagrams" in Chapter 2. TECHNICAL DATA AND PARTS LIST on page 02-15.

Read wire	DC voltage
Red—Black	280 V (AC 220 V -10%) to 373 V (AC 240 V +10%)
White—Black	15±1.5 V

-> If the voltage is not correct, replace inverter PCB.

↓

Check point 5. Replace main PCB

If Check point 1 to 4 do not improve the symptom, change main PCB.

↓

End

2-24. E: 99. 4-way valve error (Outdoor unit)

Indicator	Indoor unit	Operation indicator	9 time flash
		Timer indicator	9 time flash
		Economy indicator	Continuous flash
		Error code	E: 99
	outdoor unit		Refer to "Error code table (Outdoor unit)" on page 03-3
Detective actuator	Indoor unit	main PCB	When the indoor heat exchanger temperature is compared with the room temperature, and either following condition is detected continuously two times, the compressor stops. Indoor heat exchanger temp. - Room temp. > 10°C (Cooling or Dry operation) Indoor heat exchanger temp. - Room temp. < -10°C (Heating operation) If the same operation is repeated 5 times, the compressor stops permanently.
	Heat exchanger temperature thermistor		
	Room temperature thermistor		
	4-way valve		
Forecast of cause			Air filter clogged
			Connector connection failure
			Thermistor failure
			Coil failure
			4-way valve failure
			Main PCB failure

Check point 1. Check air filter condition

Check air filter dirty.
→ If the air filter dirty, clean up the air filter.

↓

Check point 2. Check connection of connector

- Check if connector is removed.
- Check erroneous connection.
- Check if thermistor cable is open.

→ Upon correcting the removed connector or mis-wiring, reset the power.

↓

Check point 3. Check each thermistor

- Isn’t it fallen off the holder?
- Is there a cable pinched?

Check characteristics of room thermistor and indoor unit heat exchanger thermistor.
For the thermistor resistance value, refer to "Thermistor resistance values" on page 03-51.
→ If defective, replace the thermistor.

↓

TROUBLESHOOTING

Check point 4. Check the solenoid coil and 4-way valve
NOTE: Refer solenoid coil and 4-way valve in "Service parts information" on page 03-43. • **Solenoid coil** Remove from PCB and check the resistance value of coil. Resistance value is 1.97 kΩ. → If it is open or abnormal resistance value, replace solenoid coil. • **4-way valve** Check each piping temperature, and the location of the valve by the temperature difference. If the value location is not proper, replace 4-way valve.

↓

Check point 5. Replace main PCB
If Check Point 1 to 4 do not improve the symptom, replace main PCB.

↓

End

TROUBLESHOOTING

2-25. E: A1. Discharge temperature error (Outdoor unit)

Indicator	Indoor unit	Operation indicator	10 time flash
		Timer indicator	1 time flash
		Economy indicator	Continuous flash
		Error code	E: A1
	Outdoor unit		Refer to "Error code table (Outdoor unit)" on page 03-3
Detective actuator	Outdoor unit main PCB		Protection stop by discharge temperature ≥ 110°C during compressor operation generated 2 times within 24 hours.
	Discharge temperature thermistor		
Forecast of cause			3-way valve not opened
			EEV or capillary tube defective, strainer clogged
			Outdoor unit operation failure, foreign matter on heat exchanger
			Discharge temperature thermistor failure
			Insufficient refrigerant
			Main PCB failure

TROUBLESHOOTING

TROUBLESHOOTING

Check point 1. Check if 3-way valve is open

If the 3-way valve is closed, open the 3-way valve and check operation.

NOTE: For cooling operation, check gas side of the 3-way valve.
For heating operation, check liquid side of the 3-way valve.

↓

Check point 2. Check any of the electronic expansion valve (EEV), capillary tube, or strainer, or all

- Check if EEV open or there is a capillary tube defect.
  Refer to outdoor unit Electronic Expansion Valve (EEV) or Capillary tube in "Service parts information" on page 03-43.
- Check the strainer clogging.

↓

Check point 3. Check the outdoor unit fan and heat exchanger

- Check for foreign object at heat exchanger
- Check if fan can be rotated by hand.
- Check the motor. (Refer to outdoor unit fan motor in "Service parts information" on page 03-43.)

↓

Check point 4. Check the discharge thermistor

The discharge temperature thermistor characteristics check. (Check by disconnecting thermistor from PCB.)

NOTE: For the characteristics of the thermistor, refer to "Thermistor resistance values" on page 03-51.

↓

Check point 5. Check the refrigerant amount
Check the refrigerant leakage.

↓

Check point 6. Replace the main PCB
If check point 1 to 5 do not improve the symptom, replace the main PCB.

↓

End

TROUBLESHOOTING

2-26. E: AC. Heat sink temperature error (Outdoor unit)

Indicator	Indoor unit	Operation indicator	10 time flash
		Timer indicator	12 time flash
		Economy indicator	Continuous flash
		Error code	E: AC
	Outdoor unit		Refer to "Error code table (Outdoor unit)" on page 03-3
Detective actuator	Outdoor unit inverter PCB		Protection stop by heat sink temperature ≥ 80°C during heat sink operation generated 2 times within 24 hours.
	Heat sink temperature thermistor		
Forecast of cause			Foreign matter on heat sink, heat sink dirty
			Foreign matter on heat exchanger, excessive ambient temperature rise
			Heat sink temp. thermistor defective

Check point 1. Check the heat sink state

Heat sink foreign matter, soiling check

↓

Check point 2. Check the foreign matter and ambient temperature of heat exchanger

- Heat exchange foreign matter check
- Ambient temperature not raised by effect of other heat sources?
- Discharged air not sucked in?

↓

Check point 3. Check the heat sink temperature thermistor

The heat sink temperature thermistor characteristics check. (Check by disconnecting thermistor from PCB.)

NOTE: For the characteristics of the thermistor, refer to "Thermistor resistance values" on page 03-51.

↓

Check point 4. Replace inverter PCB

Replace inverter PCB

↓

End

TROUBLESHOOTING

3. Troubleshooting without error code

3-1. Indoor unit—No power

Forecast of cause	Power supply failure
	External cause
	Electrical components defective

TROUBLESHOOTING

Check point 1. Check installation condition

- Isn't the breaker down?
- Check loose or removed connection cable.

-> If abnormal condition is found, correct it by referring to the installation manual or the "DESIGN & TECHNICAL MANUAL".

↓

Check point 2. Check external cause at indoor and outdoor (voltage drop or noise)

- Instant drop: Check if there is a large load electric apparatus in the same circuit.
- Momentary power failure: Check if there is a defective contact or leak current in the power supply circuit.
- Noise: Check if there is any equipment causing harmonic wave near electric line. (Neon bulb or electric equipment that may cause harmonic wave)
  Check the complete insulation of grounding.

↓

Check point 3. Check electrical components

Check the voltage of power supply.
Check if AC 198 to 264 V appears at outdoor unit terminal L—N.
-> If no, go to "Check point 1" and "Check point 2".

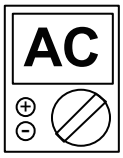

↓

- Check fuse in filter PCB.
  If fuse is open, check if the wiring between terminal and filter PCB is loose, and replace fuse.
- Check varistor in filter PCB.
  If varistor is defective, there is a possibility of an abnormal power supply.
  Check the correct power supply and replace varistor.
  Upon checking the normal power supply, replace varistor.

↓

End

3-2. Outdoor unit—No power

Forecast of cause	Power supply failure
	External cause
	Electrical components defective

Check point 1. Check installation condition

- Is the circuit breaker on or off?
- Check loose or removed connection cable.

→ If abnormal condition is found, correct it by referring to the installation manual or the “DESIGN & TECHNICAL MANUAL”.

↓

Check point 2. Check external cause at indoor and outdoor (voltage drop or noise)

- Instant drop: Check if there is a large load electric apparatus in the same circuit.
- Momentary power failure: Check if there is a defective contact or leak current in the power supply circuit.
- Noise: Check if there is any equipment causing harmonic wave near electric line. (Neon bulb or electric equipment that may cause harmonic wave)
  Check the complete insulation of grounding.

↓

Check point 3. Check electrical components

Check the voltage of power supply.
Check if AC 198 to 264 V appears at outdoor unit terminal L—N
→ If no, go to "Check point 1" and "Check point 2".

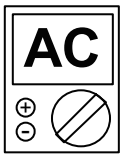

↓

- Check fuse in main PCB.
  If fuse is open, check if the wiring between terminal and main PCB is loose, and replace fuse.

↓

Check point 4. Replace the main PCB

If check point 1 to 3 do not improve the symptom, replace the main PCB.

↓

End

3-3. No operation (Power is on)

Forecast of cause	Setting/ Connection failure
	External cause
	Electrical components defective

TROUBLESHOOTING

Check point 1. Check indoor and outdoor installation condition

- Indoor unit:
  - Check incorrect wiring between indoor unit and remote controller.
  - Check if there is an open cable connection.
- Are these indoor unit, outdoor unit, and remote controller suitable model names to connect?

-> If there is some abnormal condition, correct it by referring to the installation manual and “DESIGN & TECHNICAL MANUAL”.

↓

Turn off the power and check correct followings.

- Is there loose or removed communication line of indoor unit and outdoor unit?

↓

Check point 2. Check external cause at indoor and outdoor (Voltage drop or Noise)

- Instant drop: Check if there is a large load electric apparatus in the same circuit.
- Momentary power failure: Check if there is a defective contact or leak current in the power supply circuit.
- Noise: Check if there is any equipment causing harmonic wave near electric line. (Neon bulb or electric equipment that may cause harmonic wave)
  Check the complete insulation of grounding.

↓

Check point 3. Check wired remote controller and controller PCB

Check voltage at CN300 (terminal 1—3) of main PCB.
(Power supply to remote controller)

- If it is DC 13 V, remote controller is failure. (The controller PCB is normal)
  -> Replace remote controller.
- If it is DC 0 V, controller PCB is failure. (Check the remote controller once again)
  -> Replace controller PCB.

↓

Check point 4. Replace main PCB

If check point 1 to 3 do not improve the symptom, change main PCB.

↓

End

3-4. No cooling/No heating

Forecast of cause	Indoor unit error
	Outdoor unit error
	Effect by surrounding environment
	Connection pipe/Connection wire failure
	Refrigeration cycle failure

TROUBLESHOOTING

Check point 1. Check Indoor unit

- Does Indoor unit fan run in the HIGH mode?
- Is air filter dirty?
- Is heat exchanger clogged?
- Check if energy save function is operated.

↓

Check point 2. Check outdoor unit operation

- Check if outdoor unit is operating.
- Check any objects that obstruct the air flow route.
- Check if heat exchanger is clogged.
- Is the valve open?

↓

Check point 3. Check site condition

- Is capacity of Indoor unit fitted to the room size?
- Any windows open or direct sunlight?

↓

Check point 4. Check indoor/outdoor installation condition

- Check connection pipe (specified pipe length and pipe diameter?)
- Check any loose or removed communication line.

→ If there is an abnormal condition, correct it by referring to the installation manual or the “DESIGN & TECHNICAL MANUAL”.

↓

Check point 5. Check Refrigeration cycle

- Check if strainer is clogged (Refer to the figure below).
- Measure gas pressure, and if there is a leakage, correct it.
- Check if EEV open or there is a capillary tube defect.
  Refer to outdoor unit Electronic Expansion Valve (EEV) or Capillary tube in "Service parts information" on page 03-43.
- Check compressor.
  Refer to compressor in "Service parts information" on page 03-43.
  Refer to inverter compressor in "Service parts information" on page 03-43.

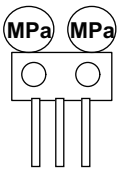

NOTE: When recharging the refrigerant, make sure to perform vacuuming, and recharge the specified amount.

↓

End

NOTES:

- Strainer normally does not have temperature difference between inlet and outlet as shown below.

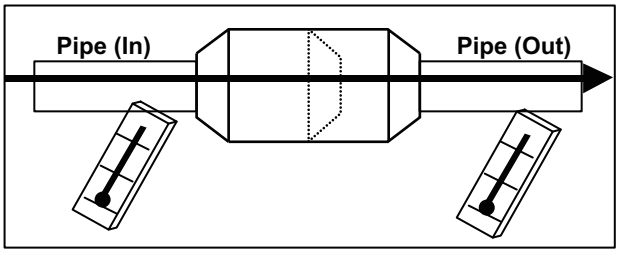

- If there is a difference like shown below, there is a possibility of inside clogged. In this case, replace the strainer.

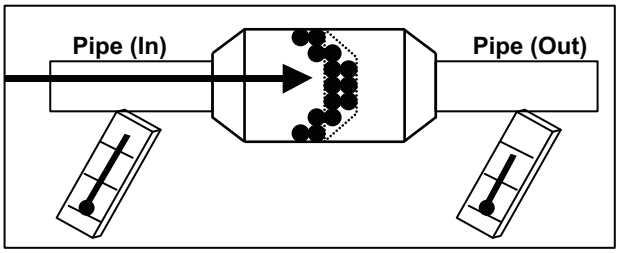

TROUBLESHOOTING

3-5. Abnormal noise

Forecast of cause	Abnormal installation (indoor unit/outdoor unit)
	Fan failure (indoor unit/outdoor unit)
	Compressor failure (outdoor)

Diagnosis method when abnormal noise is occurred

Abnormal noise is coming from Indoor unit.
(Check and correct followings)

↓

- Is main unit installed in stable condition?
- Is the installation of air suction grille and front panel normal?

↓

- Is fan broken or deformed?
- Is the screw of fan loose?
- Is there any object which obstruct the fan rotation?

↓

End

Abnormal noise is coming from Outdoor unit.
(Check and correct followings)

↓

- Is main unit installed in stable condition?
- Is fan guard installed normally?

↓

- Is fan broken or deformed?
- Is the screw of fan loose?
- Is there any object which obstruct the fan rotation?

↓

Check if vibration noise by loose bolt or contact noise of piping is happening.

↓

Is compressor locked?

- Check Compressor
  Refer to compressor and inverter compressor in "Service parts information" on page 03-43.

↓

End

TROUBLESHOOTING

3-6. Water leaking

Forecast of cause	Erroneous installation
	Drain hose failure

Diagnosis method when water leak occurs

- Is main unit installed in stable condition?
- Is main unit broken or deformed at the time of transportation or maintenance?

↓

- Is drain hose connection loose?
- Is there a trap in drain hose?
- Is drain hose clogged?

↓

Is fan rotating?

↓

End

Diagnosis method when water is spitting out

Is the filter clogged?

↓

Check gas pressure and correct it if there was a gas leak.

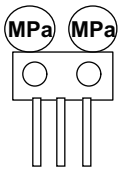

↓

End

TROUBLESHOOTING

4. Service parts information

4-1. Compressor

Diagnosis method of compressor (If outdoor unit LED displays error, refer to troubleshooting)

Does not start up	Stops soon after starting up	Abnormal noise
↓	↓	↓
Is there open or loose connection cable?	Is there open or loose connection cable?	Check if vibration noise by loose bolt or contact noise of piping is happening.
↓	↓	↓
Check main PCB, connection of compressor, and winding resistance. (Refer to the next page) → If there is no failure, the defect of compressor is considered (Locked compressor due to clogged dirt or less oil)	Is gas pipe valve open? (Low pressure is too low)	Defective compressor can be considered. (due to inside dirt clogging or broken component)
↓	↓	↓
Replace compressor.	Check if refrigerant is leaking.	Replace compressor.
↓	↓	↓
End	Check if strainer is clogged. (Refer to outdoor EEV or capillary tube in this chapter.)	**End**
	↓	
	Check main PCB, connection of compressor and winding resistance. (Refer to the next page) → If there is no failure, the defect of compressor can be considered. (Compression part broken or valve defective.)	
	↓	
	Replace compressor.	
	↓	
	End	

4-2. Inverter compressor

Check point 1. Check connection

- Check terminal connection of compressor (loose or incorrect wiring)

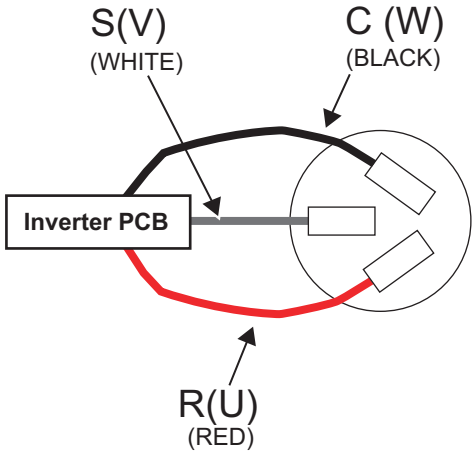

- Check terminal connection of inverter PCB (loose or incorrect wiring)

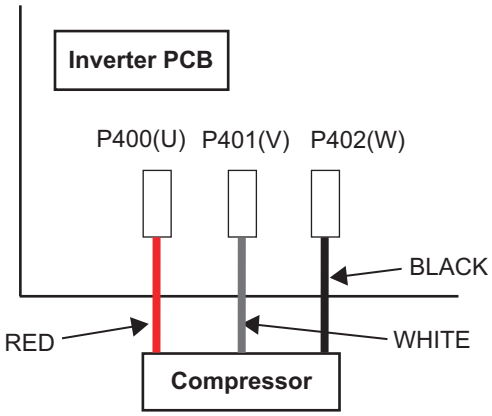

↓

Check point 2. Check winding resistance

Check winding resistance of each terminal.
Resistance value: 1.125 Ω ±7% at 25°C

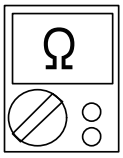

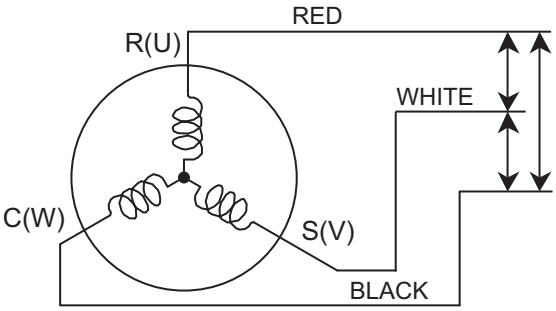

→ If the resistance value is 0 Ω or infinite, replace compressor.

↓

Check point 3. Replace inverter PCB

If check point 1 to 2 do not improve the symptom, replace inverter PCB.

4-3. Outdoor unit Electronic Expansion Valve (EEV)

Check point 1. Check connections

Check connection of connector. (Loose connector or open cable)

NOTE: For details of wiring diagram, refer to "Wiring diagrams" in Chapter 2. TECHNICAL DATA AND PARTS LIST on page 02-15.

Check point 2. Check coil of EEV

Remove connector, check each winding resistance of coil.

Read wire	Resistance value
1 (Red) - 2 (Blue)	46 Ω ± 3 Ω at 20°C
1 (Red) - 3 (Orange)	
1 (Red) - 4 (Yellow)	
1 (Red) - 5 (White)	

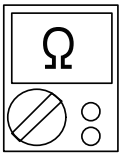

→ If Resistance value is abnormal, replace EEV.

Check point 3. Check Voltage from main PCB

Remove connector and check voltage (DC 12 V)
→ If it does not appear, replace main PCB.

Check point 4. Check noise at start up

Turn on the power and check the operation noise.
→ If an abnormal noise does not show, replace main PCB.

Check point 5. Check Opening and Closing Operation of Valve

When valve is closed, it has a temp. difference between inlet and outlet

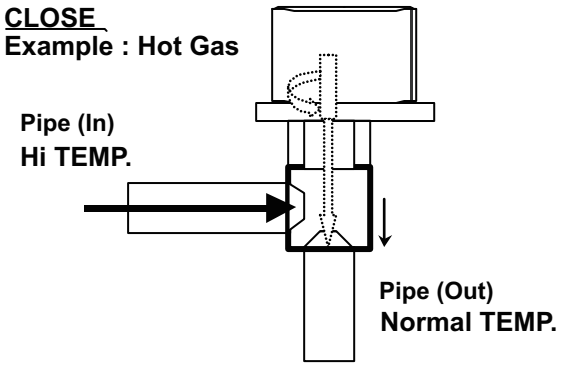

If it is open, it has no temp. difference between inlet and outlet

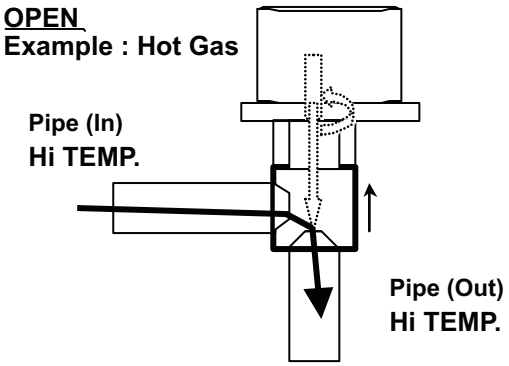

Check point 6. Check strainer
• Strainer normally does not have temperature difference between inlet and outlet as shown below.

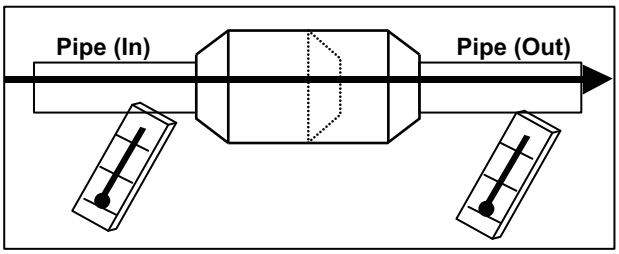

- If there is a difference like shown below, there is a possibility of inside clogged. In this case, replace the strainer.

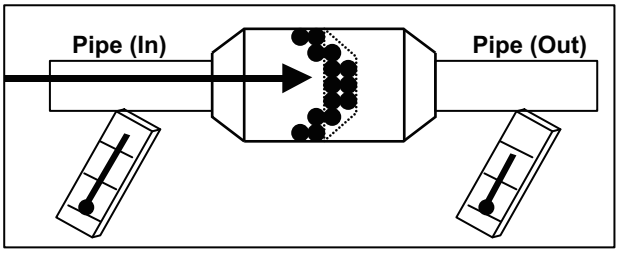

TROUBLESHOOTING

4-4. Indoor unit fan motor

Check point 1. Check rotation of fan
Rotate the fan by hand when operation is off. (Check if fan is caught, dropped off or locked motor) → If fan or bearing is abnormal, replace it.

Check point 2. Check resistance of indoor fan motor

Refer to below. Circuit-test “Vm” and “GND” terminal

NOTE: Vm: DC voltage, GND: Earth terminal

→ If they are short-circuited (below 300 kΩ), replace indoor fan motor and controller PCB.

Pin number (wire color)	Terminal function (symbol)
1 (Red)	DC voltage (Vm)
2	No function
3	No function
4 (Black)	Earth terminal (GND)
5 (White)	Control voltage (Vcc)
6 (Yellow)	Speed command (Vsp)
7 (Blue)	Feed back (FG)

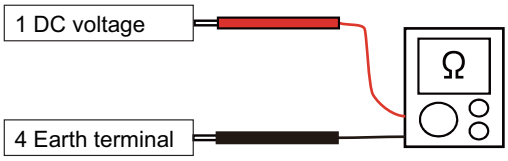

4-5. Outdoor unit fan motor

Check point 1. Check rotation of fan
Rotate the fan by hand when operation is off. (Check if fan is caught, dropped off or locked motor) → If fan or bearing is abnormal, replace it.

Check point 2. Check resistance of outdoor fan motor
Refer to below. Circuit-test “Vm” and “GND” terminal **NOTE:** Vm: DC voltage, GND: Earth terminal → If they are short-circuited (below 300 kΩ), replace outdoor fan motor and controller PCB.

Pin number (wire color)	Terminal function (symbol)
1 (Red)	DC voltage (Vm)
2	No function
3	No function
4 (Black)	Earth terminal (GND)
5 (White)	Control voltage (Vcc)
6 (Yellow)	Speed command (Vsp)
7 (Brown)	Feed back (FG)

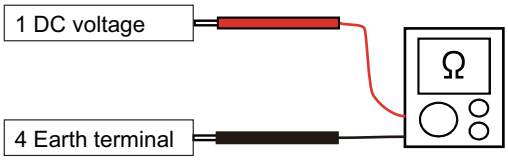

4-6. Pressure switch

- Type of contact

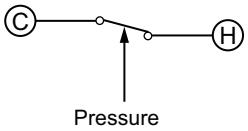

- Characteristics of pressure switch

Pressure switch 1	
Contact: Short → Open	4.2 — 4.05 MPa
Contact: Open → Short	3.2 ± 0.15 MPa

30/36 model: P770

TROUBLESHOOTING

4-7. 4-way valve coil (solenoid coil)/4-way valve

Check point 1. Check connection
• Check the connection of connector P60.

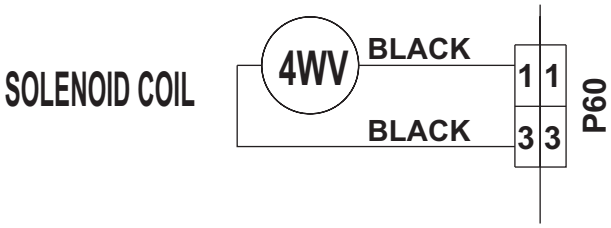

↓

Check Point 2 : Check solenoid coil
Remove P60 from PCB and check the resistance value of coil. Resistance Value ≈ 1.97 kΩ

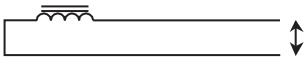

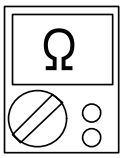

→ If it is Open or abnormal resistance value, replace solenoid coil.

↓

Check Point 3: Check operation of 4-way valve
Check each piping temperature, and confirm the location of the valve by the temperature difference

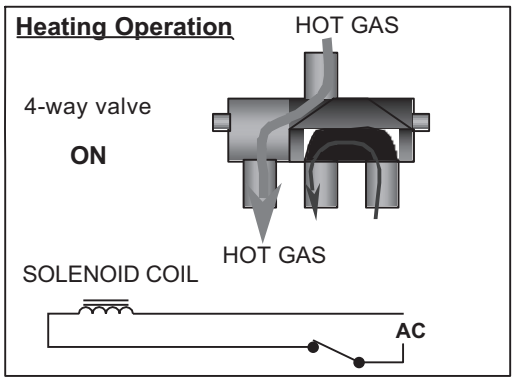

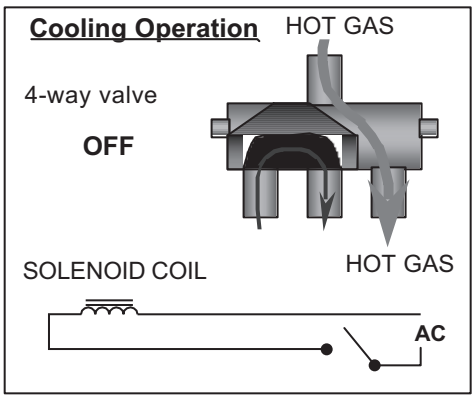

→ If the valve location is not proper, replace 4-way valve.

↓

Check Point 4: Replace main PCB
If none of Checks 1 to 3 apply, replace the main PCB.

5. Thermistor resistance values

5-1. Indoor unit

■ Room temperature thermistor

Temperature (°C)	Resistance (kΩ)	Voltage (V)
-10.0	58.25	0.73
-5.0	44.03	0.93
0.0	33.62	1.15
5.0	25.92	1.39
10.0	20.17	1.66
15.0	15.84	1.94
20.0	12.54	2.22
25.0	10.00	2.50
30.0	8.04	2.77
35.0	6.51	3.03
40.0	5.30	3.27
45.0	4.35	3.48

■ Heat exchanger temperature thermistor

Temperature (°C)	Resistance (kΩ)	Voltage (V)
-30.0	1,131.91	0.21
-25.0	804.52	0.29
-20.0	579.59	0.40
-15.0	422.89	0.53
-10.0	312.27	0.69
-5.0	233.21	0.88
0.0	176.03	1.10
5.0	134.23	1.36
10.0	103.34	1.63
15.0	80.28	1.92
20.0	62.91	2.21
25.0	49.70	2.51
30.0	39.57	2.79
35.0	31.74	3.06
40.0	25.64	3.30
45.0	20.85	3.53
50.0	17.06	3.73
55.0	14.05	3.90
60.0	11.64	4.05
65.0	9.69	4.19

TROUBLESHOOTING

5-2. Outdoor unit

■ Discharge temperature thermistor

Temperature (°C)	Resistance (kΩ)	Voltage (V)
-30.0	1,013.11	0.06
-25.0	729.09	0.09
-20.0	531.56	0.12
-15.0	392.31	0.16
-10.0	292.91	0.21
-5.0	221.09	0.28
0.0	168.60	0.36
5.0	129.84	0.46
10.0	100.91	0.57
15.0	79.12	0.71
20.0	62.55	0.86
25.0	49.84	1.03
30.0	40.01	1.23
35.0	32.35	1.43
40.0	26.34	1.65
45.0	21.58	1.88
50.0	17.79	2.11
55.0	14.75	2.34
60.0	12.30	2.57
65.0	10.32	2.79
70.0	8.70	3.00
75.0	7.36	3.19
80.0	6.27	3.37
85.0	5.36	3.54
90.0	4.60	3.69
95.0	3.96	3.83
100.0	3.43	3.96
105.0	2.98	4.07
110.0	2.60	4.17
115.0	2.27	4.26
120.0	2.00	4.33

TROUBLESHOOTING

■ Heat exchanger temperature thermistor

Temperature (°C)	Resistance (kΩ)	Voltage (V)
-30.0	95.58	0.24
-25.0	68.90	0.32
-20.0	50.30	0.43
-15.0	37.19	0.57
-10.0	27.80	0.73
-5.0	21.01	0.92
0.0	16.05	1.14
5.0	12.38	1.39
10.0	9.63	1.65
15.0	7.56	1.93
20.0	5.98	2.21
25.0	4.77	2.49
30.0	3.84	2.77
35.0	3.10	3.02
40.0	2.53	3.26
45.0	2.08	3.48
50.0	1.71	3.68
55.0	1.42	3.85
60.0	1.19	4.00
65.0	1.00	4.13
70.0	0.84	4.29
75.0	0.71	4.35
80.0	0.61	4.43
85.0	0.52	4.51
90.0	0.45	4.57

TROUBLESHOOTING

■ Heatsink thermistor

Temperature (°C)	Resistance (kΩ)	Voltage (V)
-30.0	94.26	0.08
-25.0	67.95	0.11
-20.0	49.62	0.15
-15.0	36.68	0.20
-10.0	27.42	0.26
-5.0	20.73	0.34
0.0	15.83	0.43
5.0	12.21	0.55
10.0	9.50	0.68
15.0	7.46	0.84
20.0	5.90	1.01
25.0	4.71	1.21
30.0	3.78	1.42
35.0	3.06	1.64
40.0	2.50	1.88
45.0	2.05	2.11
50.0	1.69	2.35
55.0	1.40	2.58
60.0	1.17	2.81
65.0	0.98	3.02
70.0	0.83	3.22
75.0	0.70	3.41
80.0	0.60	3.58
85.0	0.51	3.73
90.0	0.44	3.87
95.0	0.38	3.99
100.0	0.33	4.10

■ Outdoor temperature thermistor

Temperature (°C)	Resistance (kΩ)	Voltage (V)
-30.0	224.33	0.73
-25.0	159.71	0.97
-20.0	115.24	1.25
-15.0	84.21	1.56
-10.0	62.28	1.90
-5.0	46.58	2.26
0.0	35.20	2.61
5.0	26.88	2.94
10.0	20.72	3.24
15.0	16.12	3.52
20.0	12.64	3.76
25.0	10.00	3.96
30.0	7.97	4.14
35.0	6.40	4.28
40.0	5.18	4.40
45.0	4.21	4.50
50.0	3.45	4.59
55.0	2.84	4.65
60.0	2.36	4.71
65.0	1.97	4.76
70.0	1.65	4.79
75.0	1.39	4.83
80.0	1.17	4.85

■ Compressor temperature thermistor

Temperature (°C)	Resistance (kΩ)	Voltage (V)
-30.0	1,013.11	0.06
-25.0	729.09	0.09
-20.0	531.56	0.12
-15.0	392.31	0.16
-10.0	292.91	0.21
-5.0	221.09	0.28
0.0	168.60	0.36
5.0	129.84	0.46
10.0	100.91	0.57
15.0	79.12	0.71
20.0	62.55	0.86
25.0	49.84	1.03
30.0	40.01	1.23
35.0	32.35	1.43
40.0	26.34	1.65
45.0	21.58	1.88
50.0	17.79	2.11
55.0	14.75	2.34
60.0	12.30	2.57
65.0	10.32	2.79
70.0	8.70	3.00
75.0	7.36	3.19
80.0	6.27	3.37
85.0	5.36	3.54
90.0	4.60	3.69
95.0	3.96	3.83
100.0	3.43	3.96
105.0	2.98	4.07
110.0	2.60	4.17
115.0	2.27	4.26
120.0	2.00	4.33

TROUBLESHOOTING

TROUBLESHOOTING

4. CONTROL AND FUNCTIONS

CONTENTS

4. CONTROL AND FUNCTIONS

1. Rotation number control of compressor.....04-1

1-1. Cooling operation 04-1
1-2. Heating operation 04-2
1-3. Dry operation 04-2
1-4. Rotation number of compressor at normal start-up 04-3
1-5. Rotation number of compressor limitation by outdoor temperature 04-4

2. Auto changeover operation.....04-6

3. Fan control.....04-8

3-1. Indoor fan control.....04-8
3-2. Outdoor fan control.....04-12

4. Louver control 04-13

4-1. Horizontal louver control.....04-13
4-2. Adjust the horizontal louver 04-13
4-3. Swing operation.....04-14

5. Timer operation control 04-15

5-1. Wireless remote control.....04-15
5-2. Wired remote control 04-17

6. Defrost operation control 04-20

6-1. Defrost operation in heating operation stopped 04-21

7. Various control.....04-22

7-1. Auto restart.....04-22
7-2. MANUAL AUTO operation.....04-22
7-3. Forced cooling operation 04-23
7-4. 10 °C HEAT operation 04-23
7-5. ECONOMY operation 04-23
7-6. POWERFUL operation 04-24
7-7. Fresh air control.....04-24
7-8. Compressor preheating 04-24
7-9. External electrical heater control 04-25
7-10. Electronic expansion valve control 04-25
7-11. Prevention to restart for 3 minutes (3 minutes st) 04-25
7-12. 4-way valve control.....04-25
7-13. Human sensor for energy saving.....04-26
7-14. Peak cut operation 04-26
7-15. Outdoor unit low noise operation 04-27
7-16. Unit status monitoring and the detected value indication 04-28

8. Various protections.....04-31

8-1. Discharge gas temperature over-rise prevention control 04-31
8-2. Anti-freezing control (cooling and dry mode) 04-31
8-3. Current release control 04-32

CONTENTS (continued)

8-4. Compressor temperature protection 04-32
8-5. High pressure protection 04-32
8-6. Low outdoor temperature protection.....04-32
8-7. High temperature and high pressure release control.....04-33

1. Rotation number control of compressor

1-1. Cooling operation

A sensor (room temperature thermistor) built in the indoor unit body will usually perceive difference or variation between a set temperature and present room temperature, and controls the operation rotation number of the compressor.

- If the room temperature is 6.0°C higher than a set temperature, the operation rotation number of compressor will attain to maximum performance.
- If the room temperature is 1.0°C lower than a set temperature, the compressor will be stopped.
- When the room temperature is within the range of +6.0°C to -1.0°C of the setting temperature, the rotation number of compressor is controlled within the range shown in the table below. However, the maximum rotation number is limited in the range shown in the figure below based on the indoor fan mode and the outdoor temperature.

- **Rotation number range of compressor**

Unit: rps

Model name	Minimum frequency	Maximum frequency
ASHH30KMTB ASHH36KMTB	15	110

- **Limit of maximum speed based on outdoor temperature**

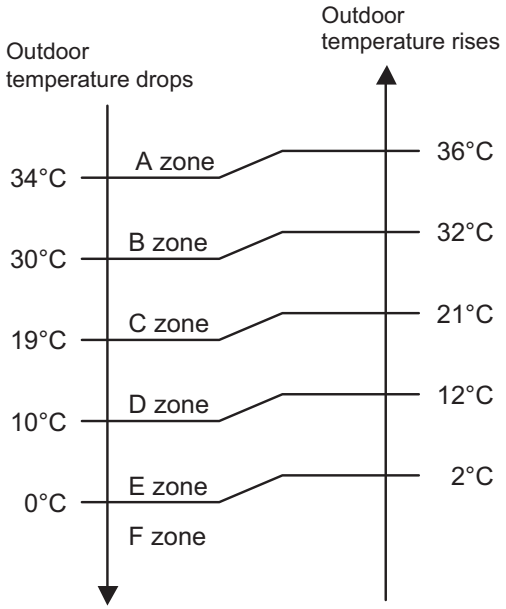

Unit: rps

Model name	Outdoor temperature zone	Indoor unit fan mode			
		HIGH	MED	LOW	QUIET
ASHH30KMTB ASHH36KMTB	A zone	110	72	60	55
	B zone	110	72	60	55
	C zone	100	60	57	55
	D zone	67	55	49	32
	E zone	67	55	49	32
	F zone	67	55	49	32

1-2. Heating operation

A sensor (room temperature thermistor) built in indoor unit body will usually perceive difference or variation between setting temperature and present room temperature, and controls operation rotation number of compressor.

- If the room temperature is 6.0°C lower than a set temperature, the operation rotation number of compressor will attain to maximum performance.
- If the room temperature is 1.0°C higher than a set temperature, the compressor will be stopped.
- When the room temperature is within the range of +1.0°C to -6.0°C of the setting temperature, the rotation number of compressor is controlled within the range shown below.

- **Rotation number range of compressor**

Unit: rps

Model name	Minimum frequency	Maximum frequency
ASHH30KMTB ASHH36KMTB	15	120

CONTROL AND FUNCTIONS

1-3. Dry operation

The rotation number of compressor shall change according to the temperature, set temperature, and room temperature variation which the room temperature sensor of the indoor unit has detected as shown in the table below.

Zone is defined by set temperature and room temperature.

- **Rotation number range of compressor**

Unit: rps

Model name	Outdoor temperature zone	Operating frequency
ASHH30KMTB ASHH36KMTB	X zone	40
	J zone	17
	Y zone	0

- **Compressor control based on room temperature**

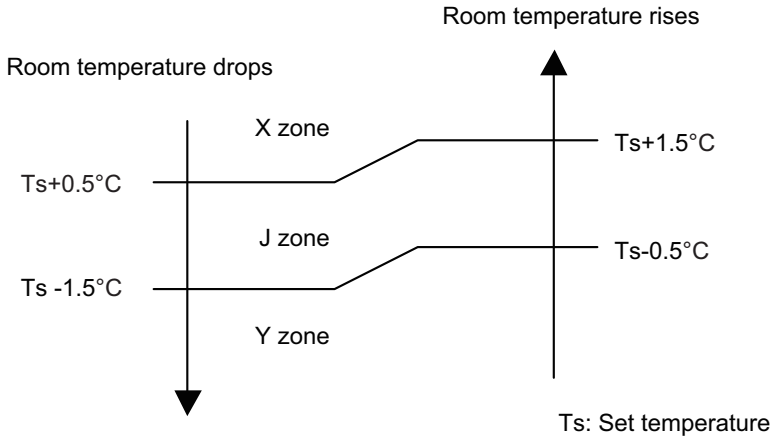

1-4. Rotation number of compressor at normal start-up

Rotation number of compressor soon after starting is controlled as below.

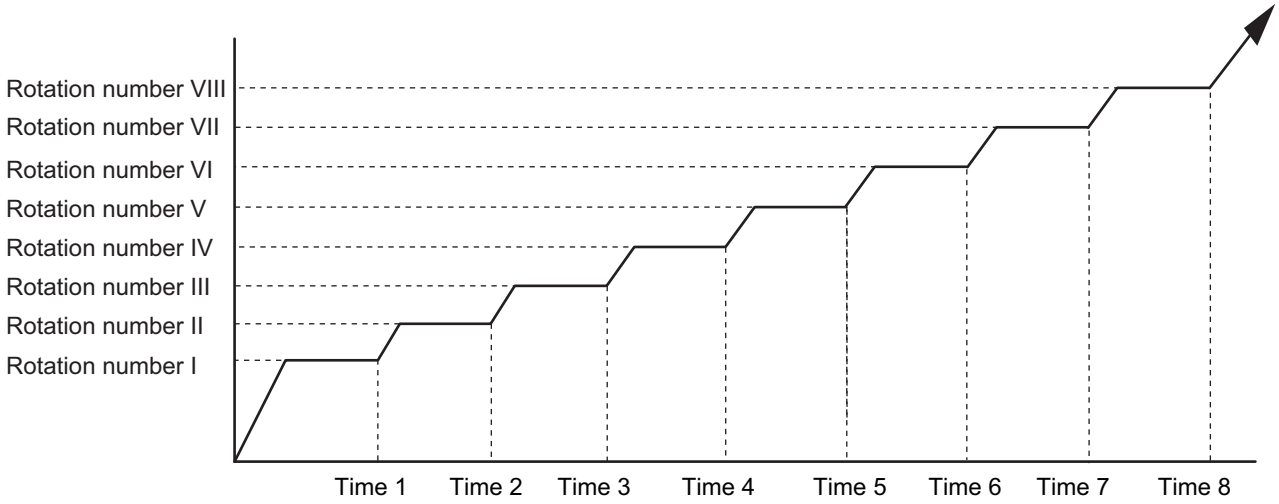

- Normal operation

Rotation number (rps)	I	II	III	IV	V	VI	VII	VIII
	25	42	53	61	65	75	85	92
Time (sec)	1	2	3	4	5	6	7	8
	90	150	270	330	390	450	570	630

- Special operation

Rotation number (rps)	I	II	III	IV	V	VI	VII	VIII
	25	42	53	61	65	75	85	92
Time (sec)	1	2	3	4	5	6	7	8
	225	305	605	665	725	785	855	1,000

NOTES:

- Normal operation:
  - Cooling and dry mode
    - Below 3 hours from the compressor stop and the compressor thermistor ≥ 15°C
    - After defrost operation
  - Other than when the compressor starts for the first time since the breaker turns on

- Special operation:
  - Other than the normal operation condition
  - When the compressor starts for the first time since the breaker turns on

1-5. Rotation number of compressor limitation by outdoor temperature

The minimum rotation number of compressor is limited by outdoor temperature as below.

- **Cooling/Dry mode**

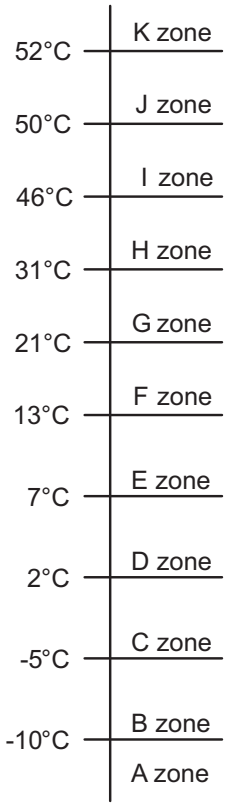

Model name	Outdoor temperature zone	Limitation of compressor frequency
ASHH30KMTB ASHH36KMTB	A zone	55 rps
	B zone	52 rps
	C zone	47 rps
	D zone	39 rps
	E zone	33 rps
	F zone	25 rps
	G zone	18 rps
	H zone	20 rps
	I zone	20 rps
	J zone	21 rps
	K zone	24 rps

CONTROL AND FUNCTIONS

- **Heating mode**

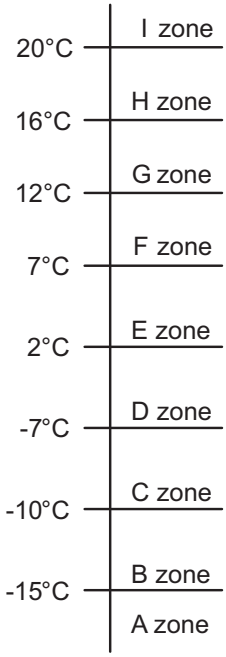

Model name	Outdoor temperature zone	Limitation of compressor frequency
ASHH30KMTB ASHH36KMTB	A zone	58 rps
	B zone	52 rps
	C zone	43 rps
	D zone	38 rps
	E zone	28 rps
	F zone	23 rps
	G zone	20 rps
	H zone	17 rps
	I zone	17 rps

CONTROL AND FUNCTIONS

2. Auto changeover operation

When the air conditioner is set to AUTO mode by remote controller, operation starts in the optimum mode from among heating, cooling, dry and monitoring modes. During operation, the optimum mode is automatically switched in accordance with temperature changes. The temperature can be set between 18°C and 30°C in 1.0°C steps.

- When operation starts, indoor fan and outdoor fan are operated for around 1 minute.
  Room temperature and outdoor temperature are sensed, and the operation mode is selected in accordance with the table below.

Room temperature	Operation mode
Tr > Ts + 2°C	Cooling
Ts + 2°C ≥ Tr ≥ Ts - 2°C	Middle zone
Tr < Ts - 2°C	Heating

Tr: Room temperature

Ts: Setting temperature

NOTE: When the operation mode is middle zone, indoor unit operation mode is selected as below.

- Same operation mode is selected as outdoor unit.
  If outdoor unit is operating in cooling and heating mode, indoor unit will be operated by the same operation mode.
- Selected by outdoor temperature.
  If outdoor unit is operating in other than cooling and heating mode, indoor unit will be operated according to the outdoor temperature as below.

Outdoor temp.	Operation mode
25°C or more	Cooling
Less than 25°C	Heating

- When the compressor was stopped for 6 consecutive minutes by temperature control function after the cooling or heating mode was selected as above, operation is switched to monitoring mode and the operation mode selection is done again.

- When the middle zone is selected on the predetermining of the operation mode, the operation mode before the changing to the monitoring mode is selected.

CONTROL AND FUNCTIONS

Operation flow chart

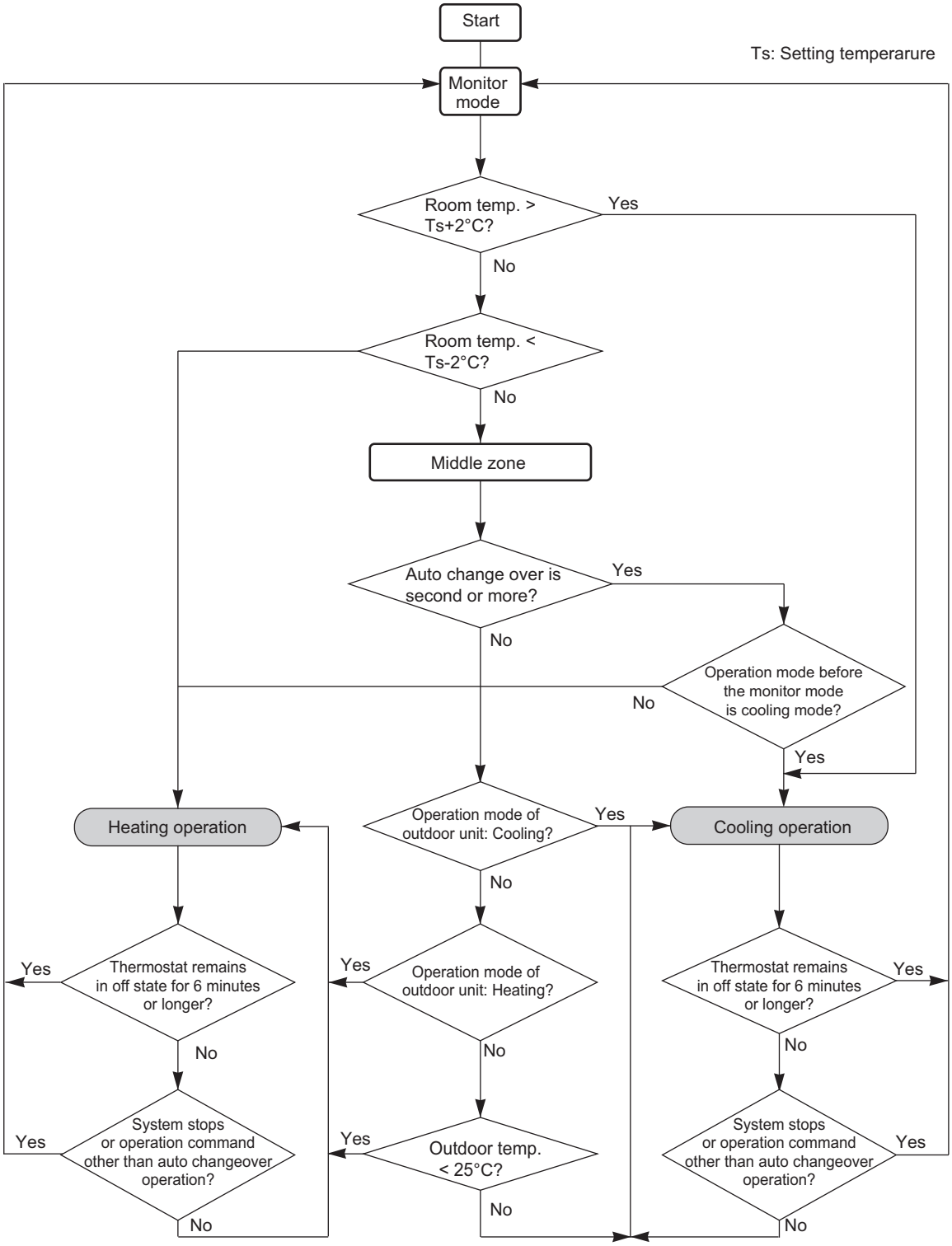

CONTROL AND FUNCTIONS

3. Fan control

Tr: Room temperature
Ts: Setting temperature

3-1. Indoor fan control

■ Fan speed

Indoor fan speed is defined as below.

Operation mode	Fan mode	Speed (rpm)
		ASHH30KMTB ASHH36KMTB
Heating	POWERFUL	1,520
	HIGH	1,330
	MED+	1,260
	MED	1,100
	LOW	950
	QUIET	780
	Cool air prevention	600
	S-LOW	540
Cooling/Fan	POWERFUL	1,520
	HIGH	1,330
	MED	1,100
	LOW	950
	QUIET	780
	Soft quiet	600*1
	S-LOW	540*2
Dry		X zone: 780 J zone: 680

*1: Fan mode only
*2: Cooling mode only

CONTROL AND FUNCTIONS

■ Fan operation

Airflow can be switched in 5 steps such as AUTO, QUIET, LOW, MED, HIGH while indoor unit fan only runs.
When fan mode is set at AUTO, it operates on MED fan speed.

■ Cooling operation

Switch the airflow AUTO, and indoor fan motor will run according to room temperature, as below.
On the other hand, if switched in HIGH—QUIET, indoor motor will run at a constant airflow of COOL operation modes QUIET, LOW, MED, HIGH as shown in “Fan speed” above.

Airflow change over (Cooling: Auto)

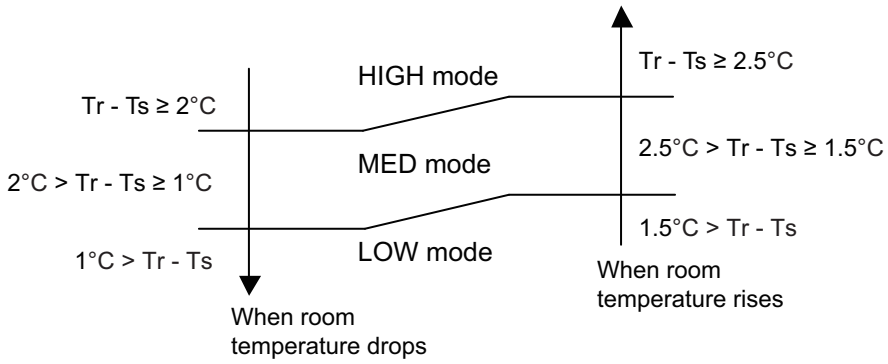

■ Dry operation

During dry operation, fan speed setting can not be changed as shown in “Fan speed” above.

■ Heating operation

Switch the airflow AUTO, and the indoor fan motor will run according to a room temperature, as below.
On the other hand, if switched in HIGH—QUIET, the indoor motor will run at a constant airflow of HEAT operation modes QUIET, LOW, MED, HIGH as shown in “Fan speed” above.

Airflow change over (Heating: Auto)

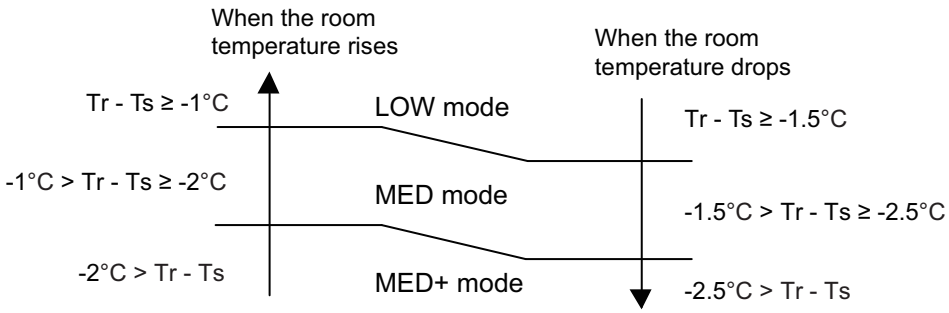

CONTROL AND FUNCTIONS

■ Cool air prevention control (heating mode)

The maximum value of the indoor fan speed is set as shown below, based on the detected temperature by the indoor heat exchanger sensor on heating mode.

- **Normal operation**

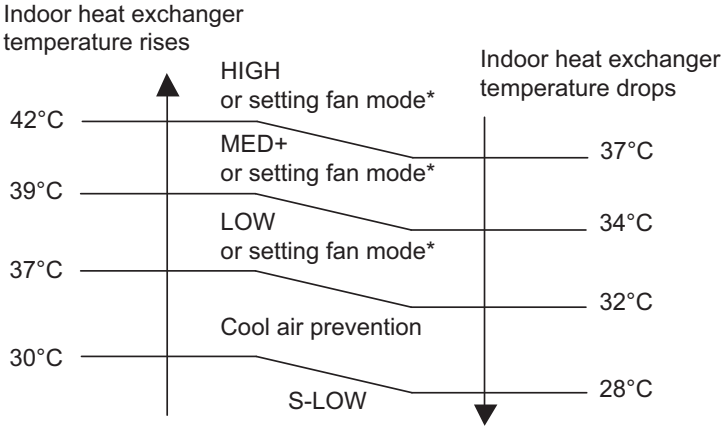

*: Lower speed is selected.

7 minutes later:

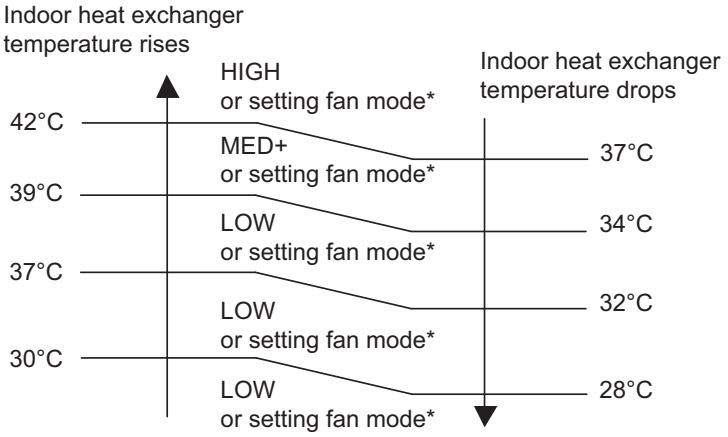

*: Lower speed is selected.

CONTROL AND FUNCTIONS

- **Powerful operation**

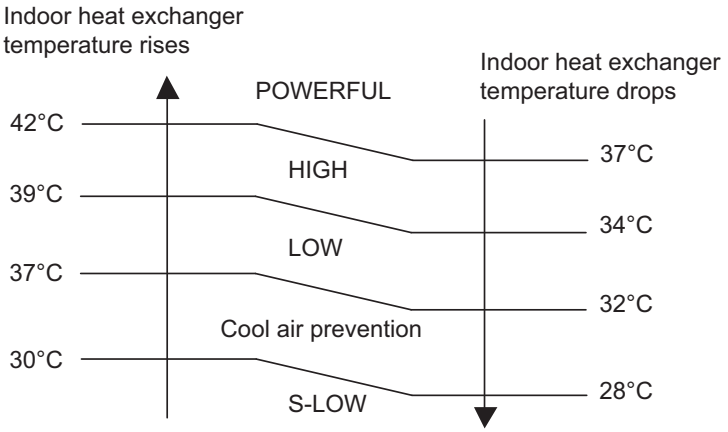

7 minutes later:

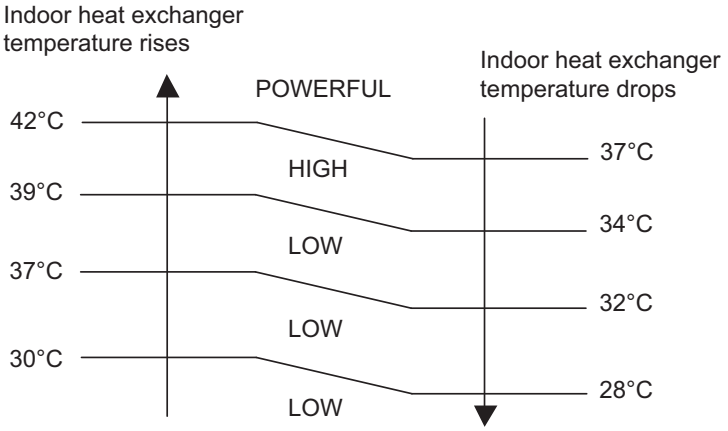

- **10 °C HEAT operation**

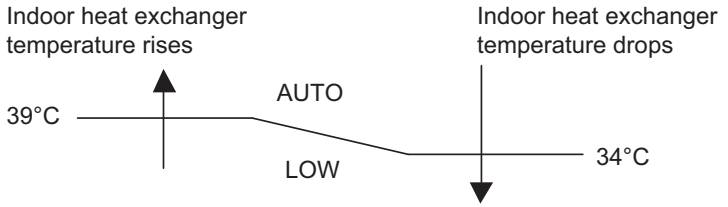

■ Moisture return prevention control (cooling and dry mode)

Switch the airflow AUTO at cooling mode, and the indoor fan motor will run as shown below.

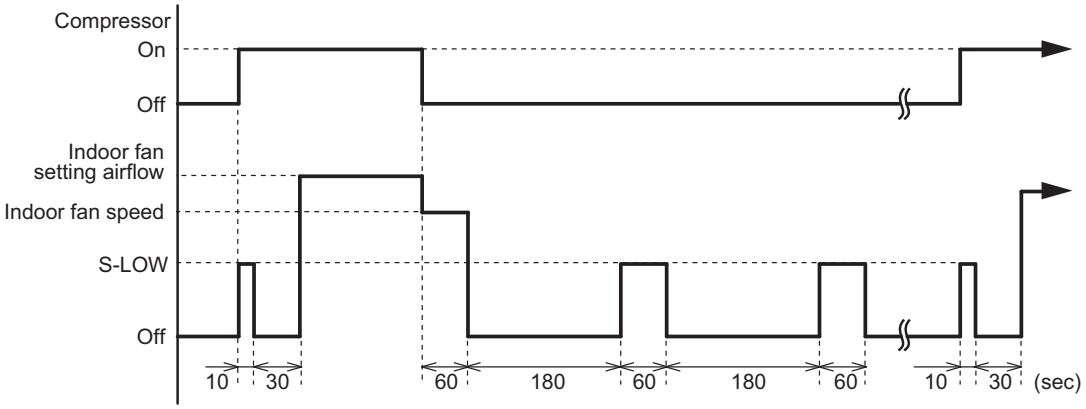

CONTROL AND FUNCTIONS

3-2. Outdoor fan control

■ Outdoor fan motor

This outdoor unit has a DC fan motor. (Control method is different between AC and DC motors.)

■ Fan speed

Fan speed is defined by outdoor temperature and compressor frequency.

Unit: rpm

Fan step	Cooling or dry	Heating
13	830	—
12	830	—
11	740	—
10	700	830
9	650	740
8	570	690
7	570	620
6	540	590
5	510	480
4	480	410
3	480	340
2	400	270
1	270	200
S-HIGH	—	830

- When the compressor frequency increases, the outdoor fan speed also changes to the higher speed.
- When the compressor frequency decreases, the outdoor fan speed also changes to the lower speed.

NOTE: After defrost control on the heating mode, the fan speed is kept higher regardless of the compressor frequency.
Fan speed after defrost control: 830 rpm

CONTROL AND FUNCTIONS

4. Louver control

4-1. Horizontal louver control

Each time the button is pressed, the airflow direction range will change as below:

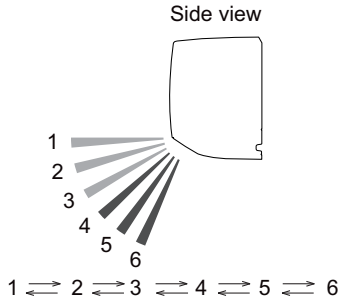

- Remote controller display is not changed.
- Up/down airflow direction is set automatically as shown, in accordance with the type of operation selected.

Cooling / Dry mode	: Horizontal flow 1
Heating mode	: Downward flow 5

- During AUTO operation, for the first a few minutes after beginning operation, airflow will be horizontal 1; the air direction cannot be adjusted during this period.
  The airflow direction setting will temporarily become 1 when the temperature of the airflow is low at the start of the Heating mode.
- After beginning of AUTO/HEAT mode operated and automatic defrosting operation, the airflow will be horizontal 1. However, the airflow direction cannot be adjusted at beginning AUTO operation mode.

4-2. Adjust the horizontal louver

Move the horizontal louvers to adjust airflow direction you prefer.

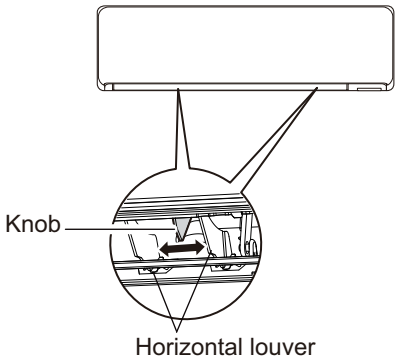

CONTROL AND FUNCTIONS

4-3. Swing operation

- To select up/down airflow swing operation
  When the swing signal is received, the horizontal louver starts to swing.
  - Swinging range
    - Cooling mode/dry mode/fan mode (1 to 3): 1 ↔ 4
    - Heating mode/fan mode (4 to 6): 3 ↔ 6
  - When the indoor fan is S-LOW or stop mode, the swing operation is interrupted and it stops at either upper end or bottom end.

CONTROL AND FUNCTIONS

5. Timer operation control

5-1. Wireless remote control

On/Off timer	Program timer	Sleep timer	Weekly timer
○	○	○	○

■ On/Off timer

- Off timer: When the clock reaches the set timer, the air conditioner will be turned off.

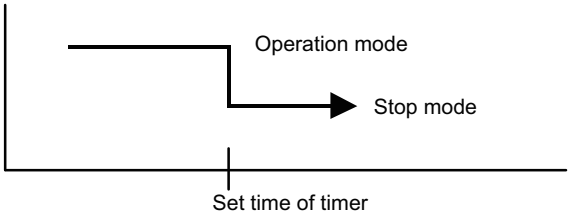

- On timer: When the clock reaches the set timer, the air conditioner will be turned on.

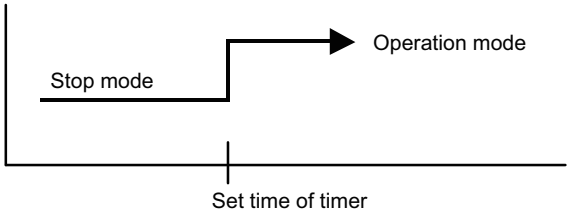

■ Program timer

- The program timer allows the off timer and the on timer to be used in combination one time.

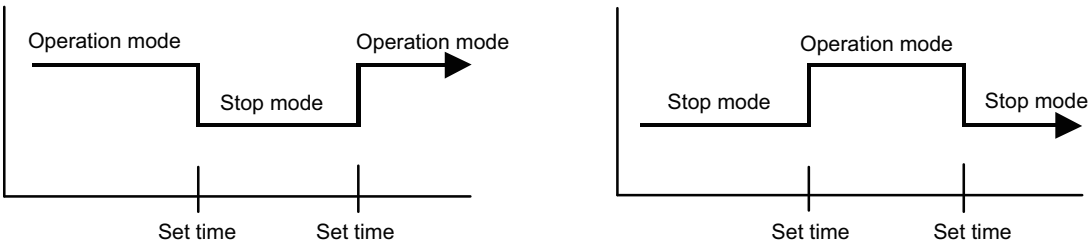

- Operation will start from the timer setting (either off timer and on timer) whichever is closest to the clock current timer setting. The order of operations is indicated by the allow in the remote controller screen.
- Sleep timer operation cannot be combined with on timer operation.

CONTROL AND FUNCTIONS

■ Sleep timer

If the sleep timer is set, the room temperature is monitored and the operation is stopped automatically. If the operation mode or the set temperature is change after the sleep timer is set, the operation is continued according to the changed setting of the sleep timer from that time on.

- In the cooling operation mode
  When the sleep timer is set, the setting temperature is increased 1°C. It increases the setting temperature another 1°C after 1 hour. After that, the setting temperature is not changed and the operation is stopped at the setting time.

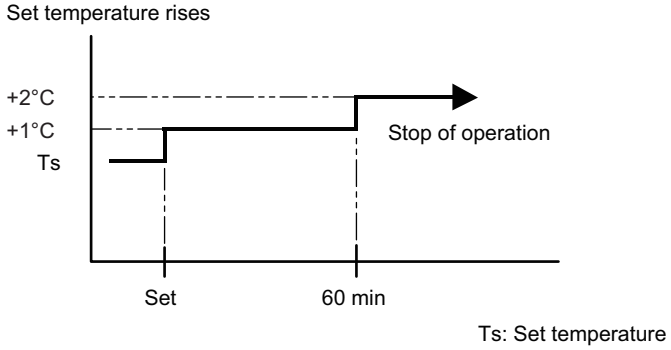

- In the heating operation mode
  When the sleep timer is set, the setting temperature is decreased 1°C. It decreases the setting temperature another 1°C every 30 minutes. Upon lowering 4°C, the setting temperature is not changed and the operation is stopped at the setting time.

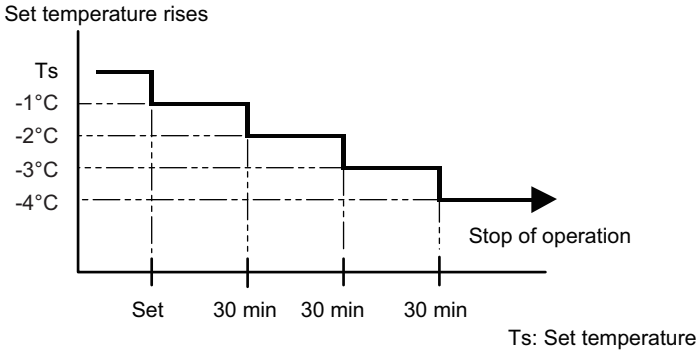

■ Weekly timer

On and off timer can be combined, and up to 4 reservations per day and 28 reservations per week. Before setting the program, set the week and time of the air conditioner at first. If the week and time are not set, the weekly timer will not operate correctly at the setting time.

CONTROL AND FUNCTIONS

5-2. Wired remote control

On/Off timer	Program timer	Sleep timer	Weekly timer	Temperature Setback Timer
○	○	○	○	○

■ On/Off timer

- Off timer: When the clock reaches the set timer, the air conditioner will be turned off.

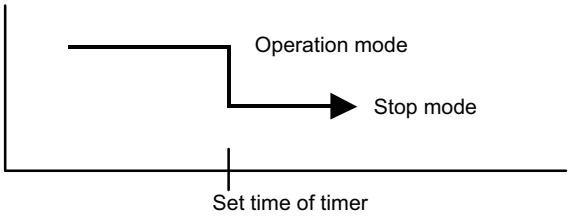

- On timer: When the clock reaches the set timer, the air conditioner will be turned on.

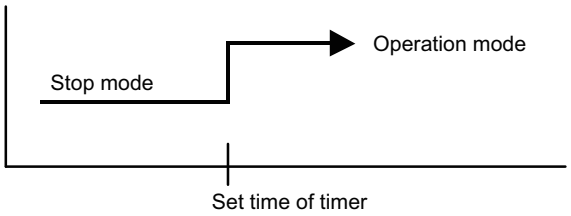

■ Program timer

- The program timer allows the off timer and the on timer to be used in combination one time.

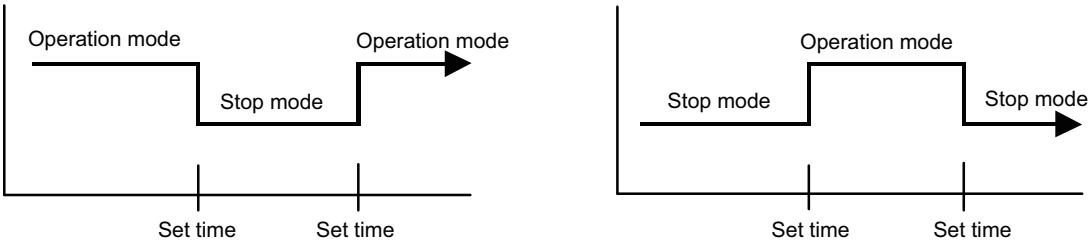

- Operation will start from the timer setting (either off timer and on timer) whichever is closest to the clock current timer setting. The order of operations is indicated by the allow in the remote controller screen.
- Sleep timer operation cannot be combined with on timer operation.

CONTROL AND FUNCTIONS

■ Sleep timer

If the sleep timer is set, the room temperature is monitored and the operation is stopped automatically. If the operation mode or the set temperature is change after the sleep timer is set, the operation is continued according to the changed setting of the sleep timer from that time on.

- In the cooling operation mode
  When the sleep timer is set, the setting temperature is increased 1°C. It increases the setting temperature another 1°C after 1 hour. After that, the setting temperature is not changed and the operation is stopped at the setting time.

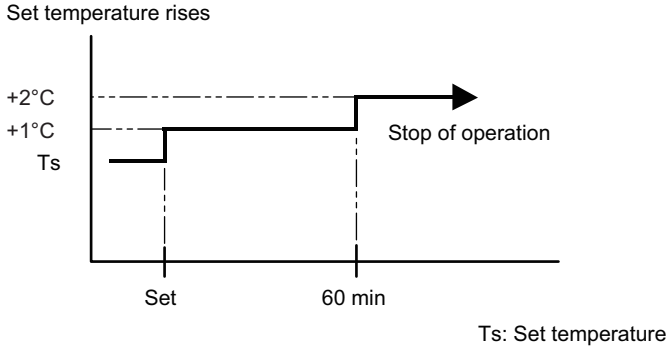

- In the heating operation mode
  When the sleep timer is set, the setting temperature is decreased 1°C. It decreases the setting temperature another 1°C every 30 minutes. Upon lowering 4°C, the setting temperature is not changed and the operation is stopped at the setting time.

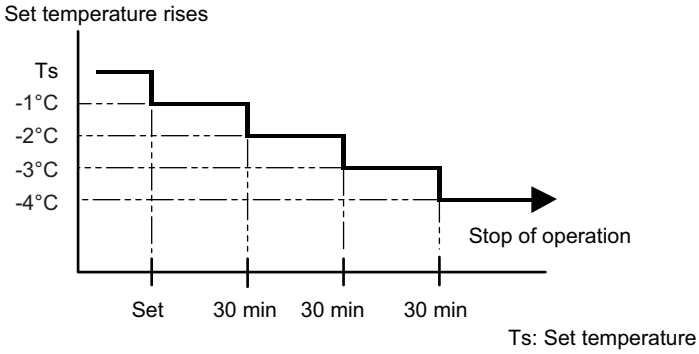

■ Weekly timer

On and off timer can be combined, and up to 4 reservations per day and 28 reservations per week. Before setting the program, set the week and time of the air conditioner at first. If the week and time are not set, the weekly timer will not operate correctly at the setting time.

CONTROL AND FUNCTIONS

■ Temperature Setback Timer

- The temperature setback timer only changes the set temperature for 7 days, it cannot be used to start or stop air conditioner operation.
- The temperature setback timer can be set to operate up to two times per day but only one temperature setting can be used.
- During COOLING/DRY mode, the air conditioner will operate at a minimum of 18°C even if the SET BACK temperature is set to 17°C or lower.

Case of Temperature Setback Timer on the Cooling operation. (Setting temperature :22°C, SET BACK temperature :26°C)

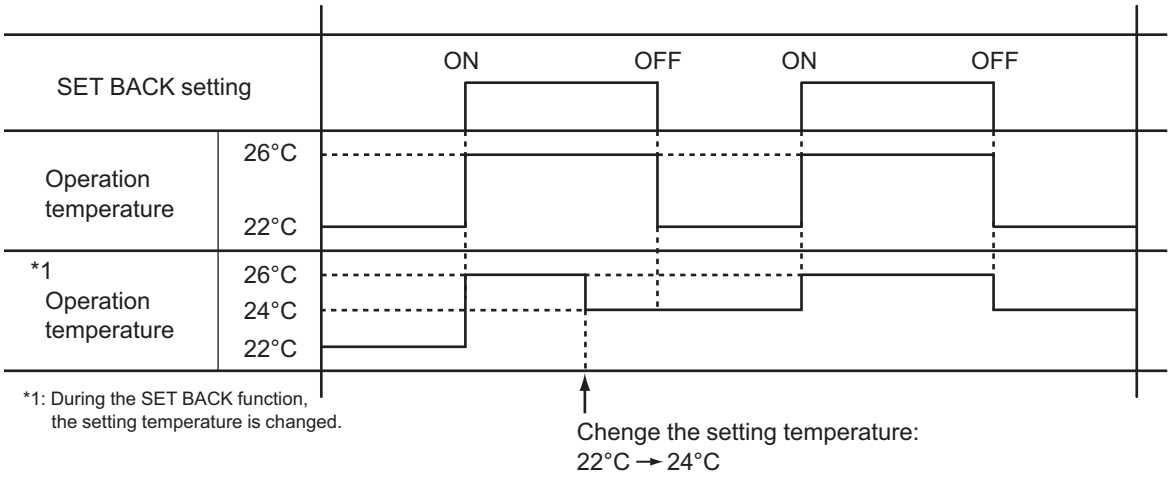

CONTROL AND FUNCTIONS

6. Defrost operation control

Tn: Outdoor unit heat exchanger temperature
Ta: Outdoor temperature
Tn10: Temperature at 10 minutes after compressor start
Tnb: Temperature before 5 minutes

• Triggering condition

The defrost operation starts when outdoor unit heat exchanger temperature sensor detects the temperature lower than the values shown below.

– **1st time defrosting after starting operation**

Compressor integrating operation time	Less than 17 min.	17 to 57 min.	More than 57 min.
Condition	Does not operate	Tn ≤ -9°C and Tn-Ta ≥ 5 deg	Tn ≤ -5°C

– **2nd time and after**

Compressor integrating operation time	Less than 35 min.	More than 35 min.
Condition	Does not operate	Tn-Tn10 < -5 deg (Tn ≤ -10°C) Tn-Tnb < -2 deg (Tn ≤ -10°C) Tn ≤ -25°C (Ta ≥ -20°C) Tn < Ta-7°C or Tn ≤ -25°C (Ta < -20°C)

– **Integrating defrost (Constant monitoring)**

Compressor integrating operation time	More than 240 min. (For long continuous operation)	More than 215 min. (For long continuous operation	Less than 10 min.* (For intermittent operation)
Condition	Tn ≤ -3°C	Tn ≤ -5°C	Count of the compressor off: 40 times

*: If the compressor continuous operation time is less than 10 minutes, the number of the compressor off is counted. If any defrost operated, the compressor off count is cleared.

• Release condition

The defrost operation is released when either one of the conditions below is satisfied.

Outdoor unit heat exchanger temperature (after 1 minute or later since compressor start)	12°C or more
Compressor operation time	15 minutes

CONTROL AND FUNCTIONS

6-1. Defrost operation in heating operation stopped

If the outdoor unit is frosted when stopping the heating operation, it stops after performing the automatic defrosting operation.

In this time, if the indoor unit operation lamp flashes slowly (6 sec on/2 sec off), the outdoor unit allow the heat exchanger to defrost, and then stop.

• Triggering condition

When all of the following conditions are satisfied in heating operation

– Compressor operation integrating time: 30 minutes or more
– Compressor continuous operation time: 10 minutes or more
– Outdoor unit heat exchanger temperature: -4°C or less

• Release condition

The defrost operation is released when either one of the conditions below is satisfied.

Outdoor unit heat exchanger temperature (after 1 minute or later since compressor start)	12°C or more
Compressor operation time	15 minutes

CONTROL AND FUNCTIONS

7. Various control

7-1. Auto restart

When the power was interrupted by a power failure etc. during operation, the operation contents at that time are memorized and when the power is recovered, operation is automatically started with the memorized operation contents.

Operation contents memorized when the power is interrupted
Operation mode
Setting temperature
Fan mode setting
Timer mode and set time (set by wireless remote controller)
Airflow direction setting
Swing
ECONOMY operation
10 °C HEAT operation
Outdoor low noise operation
Remote control setting
WLAN indicator lamp setting

CONTROL AND FUNCTIONS

7-2. MANUAL AUTO operation

When the wireless remote controller is lost or battery power dissipated, this function will work without the remote controller.

When MANUAL AUTO button is pressed more than 3 seconds and less than 10 seconds, MANUAL AUTO operation starts as shown in the table below. To stop operation, press the MANUAL AUTO button for 3 seconds.

Operation mode	Auto changeover
Fan mode	AUTO
Timer mode	Continuous (no timer setting available)
Setting temperature	24°C
Horizontal louver setting	Standard
SWING	Off
ECONOMY	Off
Human sensor	Off

7-3. Forced cooling operation

The outdoor unit may not operate depending on the room temperature.

When FORCED COOLING OPERATION button is pressed more than 10 seconds, forced cooling operation starts as shown in the table below.

Operation mode	Cooling
Fan mode	HIGH
Timer mode	Continuous (no timer setting available)
Setting temperature	24°C
Horizontal louver setting	Standard
Vertical louver setting	According to memory position
SWING	Off
ECONOMY	Off
Human sensor	Off

- During the forced cooling operation, it operates regardless of room temperature sensor.
- The operation indicator lamp and the timer indicator lamp blink simultaneously during the forced cooling operation.
  They blink for 1 second ON and 1 second OFF on both the operation indicator lamp and the timer indicator lamp (same as test operation).

By performing one of the following action, test operation will be canceled:

- Pressing the remote controller START/STOP button
- Pressing FORCED COOLING OPERATION button for 3 seconds
- 60 minutes passed after starting forced cooling operation

NOTE: When HEAT operation is selected on the remote controller during forced cooling operation, heating test run will begin in about 3 minutes.

7-4. 10 °C HEAT operation

10 °C HEAT operation performs as below setting when pressing 10 °C HEAT button.

Operation mode	Heating
Setting temperature	10°C
Fan mode	AUTO
LED display	Economy
Defrost operation	Operate as normal

7-5. ECONOMY operation

The ECONOMY operation starts by pressing ECONOMY button on the remote controller.

The ECONOMY operation is almost the same operation as below settings.

Mode	Cooling/Dry	Heating
Target temperature	Setting temperature +1°C	Setting temperature -1°C

CONTROL AND FUNCTIONS

7-6. POWERFUL operation

The POWERFUL operation starts by pressing POWERFUL button on the remote controller.
The indoor unit and outdoor unit operate at maximum power as shown in the table below.

Compressor frequency		Maximum
Fan mode		POWERFUL
Horizontal louver setting	Cooling	3
	Dry	
	Heating	5

Release condition:

- Cooling/Dry
  Room temperature ≤ Setting temperature -0.5°C or Operation time has passed 20 minutes.
- Heating
  Room temperature ≥ Setting temperature +0.5°C or Operation time has passed 20 minutes.

7-7. Fresh air control

The fan motor for Fresh Air is operated in synchronization with the indoor fan operation as below.

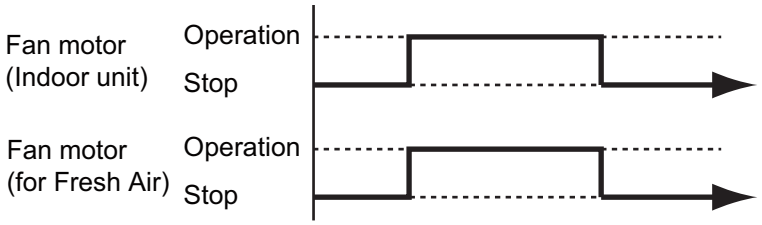

7-8. Compressor preheating

By preheating the compressor, warm airflow is quickly discharged when the operation is started.

- **Triggering condition 1**
  - Outdoor temperature ≤ 20°C
    When outdoor temperature reaches 26°C, compressor preheating stops.
  - 30 minutes after compressor stopped

- **Triggering condition 2**

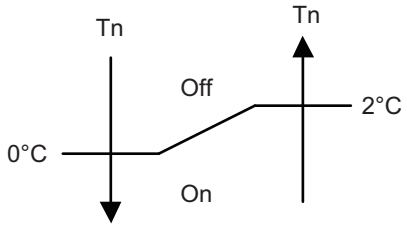

Tn: Outdoor unit heat exchanger temp.

CONTROL AND FUNCTIONS

7-9. External electrical heater control

The external electrical heater is operated as below.

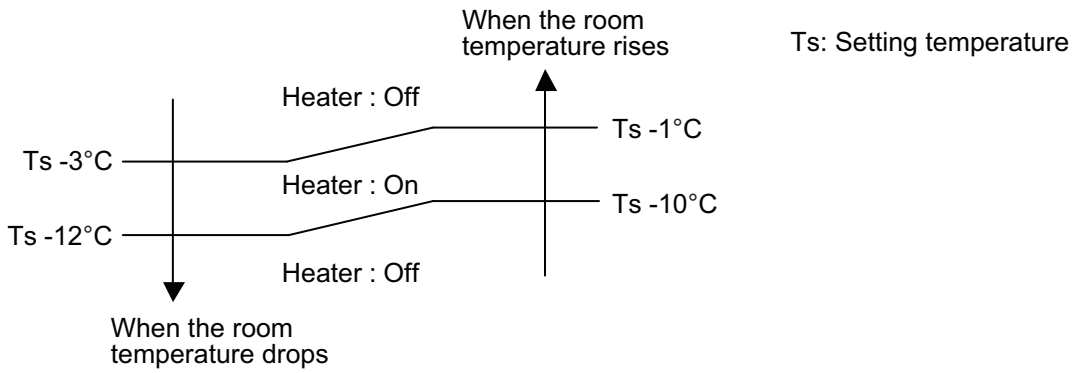

NOTES:

- When the compressor stop, external electric heater is off.
- It operates only in heating mode and when the indoor fan operates. (However, S-LOW is excluded.)

7-10. Electronic expansion valve control

The most proper opening of the electronic expansion valve is calculated and controlled under the present operating condition based on the table below.

Operation mode	Pulse range
Cooling/dry mode	Between 47 and 480 pulses
Heating mode	Between 39 and 480 pulses

NOTE: At the time of supplying the power to the outdoor unit, the initialization of the electronic expansion valve is operated (528 pulses are input to the closing direction).

7-11. Prevention to restart for 3 minutes (3 minutes st)

When the compressor fails to start for the number of times below, it does not enter operation status for 3 minutes.

Retry number	10
Retry set number	3

When the compressor fails to start in the retry set number above, the compressor is stopped.

7-12. 4-way valve control

- If heating mode is selected at the compressor start, 4-way valve is energized for heating.
- When the air conditioner is switched between cooling and heating mode, compressor is stopped, and the 4-way valve is switched when the 3 minutes passes and the compressor is started.

7-13. Human sensor for energy saving

If no one enters the room for approximately 20 minutes, the set temperature is automatically controlled. (When someone comes back into the room, the human sensor detect this, and automatically revert to the original settings.)

Operation mode	Operation details (If there is no one in the room for a while)
Cool/Dry	The setting temperature is increased by maximum 2°C. (Maximum setting temperature: 30°C)
Heat	The setting temperature is decreased by maximum 4°C. (Minimum setting temperature: 16°C)
Auto	Energy saving function is performed automatically for the selected mode (cool/heat/dry).

- Application range:

Unit: mm

Wall mounted type

Vertical angle 90°

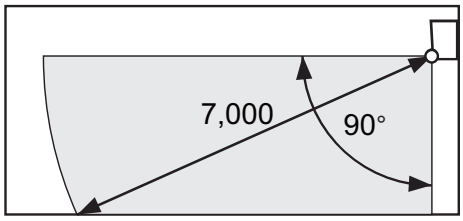

Side view

Horizontal angle 100°

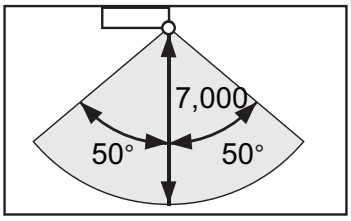

Top view

Energy saving function may not work when the room temperature is very different from the temperature defined in the temperature setting, such as when immediately after starting the operation.

- Details about detection with the human sensor:
  The human sensor detects whether there are people in the room by looking for movement by people in the room.

7-14. Peak cut operation

The current value is limited to reduce the power consumption by external input.

Peak cut level	Level 1	Level 2	Level 3	Level 4
Peak cut for rated capacity	Forced thermostat off	50%	75%	100%

NOTES:

- During defrost operation, peak cut operation becomes invalid.
- Even during the peak cut operation, the operations of current overload, economy, and low noise are effective and the outdoor unit operates by lowest current of them.

CONTROL AND FUNCTIONS

7-15. Outdoor unit low noise operation

The compressor frequency and outdoor unit fan speed are limited to reduce the operation noise by external input.

Low noise mode		Outdoor fan speed	Compressor frequency
		rpm	rps
Level 1	Cooling/Dry	770	44
	Heating	830	44
Level 2	Cooling/Dry	770	36
	Heating	830	36

NOTES:

- During the defrost operation, the compressor operates by the speed for defrost operation.
- Even during the low noise operation, the operations of current overload, economy, and peak cut are effective and the outdoor unit operates by lowest current of them.

CONTROL AND FUNCTIONS

Capacity priority mode

- Operation condition
  The function setting is set to 1.

- Capacity check condition
  - Shortage: Compressor frequency > limited compressor frequency for low noise mode
  - Enough: Compressor frequency ≤ limited compressor frequency for low noise mode

- Operation
  When detecting the shortage capacity or enough capacity condition continuous 30 minutes, the mode is changed as follows:
  - Automatic switching 1 (Level 1 setting)

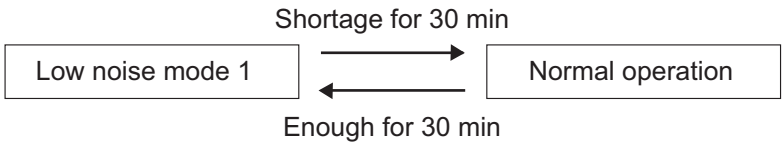

  - Automatic switching 2 (Level 2 setting)

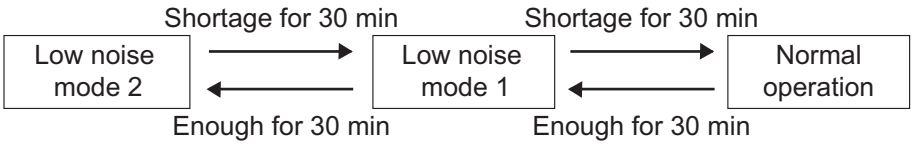

7-16. Unit status monitoring and the detected value indication

The wired remote controller can monitor the indoor and outdoor units' status and display the detected result as a relevant ID.

For details of the display method, refer to the Chapter of “Display Sensor Values” in the *Installation Manual* of Wired Remote Controller (Touch Panel).

The status can be monitored and displayed on the wired remote controller by assigning an arbitrary ID. For available ID list, refer to the table below.

NOTE: Operating time for each part cannot be reset when the part is replaced. Take notes of the operating time before replacing to count the operating time of the replaced part.

Available Sensor ID				
Sensor ID		**Item**	**Unit**	**Remarks**
00: Indoor unit				
00	000	Suction temp.	01: °C or °F	
00	001	Room temp.	01: °C or °F	When the wired remote controller thermistor is enabled, temperature of the wired remote controller thermistor is displayed.
00	002	Wired remote controller detected temp.	01: °C or °F	
00	006	Heat exchanger middle temp.	01: °C or °F	
00	020	Fan rotation number	03: rpm	
00	080	Indoor unit total energized hours	11: h	
00	081	Total filtering hours	11: h	
00	082	Indoor unit fan total operation hours	11: h	
00	095	Presence or absence detected by human sensor	00: —	0: Absence, 1: Presence —: Human sensor error or No human sensor
00	140	Operation or Stop (External input)	00: —	0: Off, 1: On —: When the function setting 46 is not set **NOTE:** Available only for external input port of the indoor unit
00	142	Forced stop (External input)	00: —	0: Off, 1: On —: When the function setting 46 is not set **NOTE:** Available only for external input port of the indoor unit
00	143	Operation or Stop 2 (External input)	00: —	0: Off, 1: On —: When the function setting 46 is not set **NOTE:** Available only for external input port of the indoor unit
00	155	Operation or Stop On/Off (External output)	00: —	0: Off, 1: On **NOTE:** The value is output even if the function setting or rotary switch is not set.
00	156	Error On/Off (External output)	00: —	0: Off, 1: On **NOTE:** The value is output even if the function setting or rotary switch is not set.
00	157	Indoor unit fan interlocking On/Off (External output)	00: —	0: Off, 1: On **NOTE:** The value is output even if the function setting or rotary switch is not set.

CONTROL AND FUNCTIONS

Available Sensor ID				
Sensor ID		**Item**	**Unit**	**Remarks**
00	158	Cooling thermostat On/Off (External output)	00: —	0: Off, 1: On **NOTE:** The value is output even if the function setting or rotary switch is not set.
00	159	Requested cooling strength On/Off (External output)	00: —	0: Off, 1: On **NOTE:** The value is output even if the function setting or rotary switch is not set.
00	160	External heater On/Off (External output)	00: —	0: Off, 1: On **NOTE:** The value is output even if the function setting or rotary switch is not set.
00	161	Heating operation status (External output)	00: —	0: Off, 1: On **NOTE:** The value is output even if the function setting or rotary switch is not set.
00	162	External output command by remote controller (External output)	00: —	0: Off, 1: On **NOTE:** The value is output even if the function setting or rotary switch is not set.
00	163	Set-point temp. not reached in server room function On/Off (External output)	00: —	0: Off, 1: On **NOTE:** The value is output even if the function setting or rotary switch is not set.
01: Outdoor unit				
01	000	Outdoor temp.	01: °C or °F	
01	001	Discharge temp.	01: °C or °F	
01	003	Heat exchanger middle temp.	01: °C or °F	
01	004	Heat exchanger outlet temp.	01: °C or °F	
01	007	Compressor temp.	01: °C or °F	
01	042	Gas pipe pressure for outdoor unit	02: MPa	
01	050	Fan 1 rotation number	03: rpm	
01	055	Compressor rotation number	04: rps	
01	060	Expansion valve (Upstream during heating)	05: pls	
01	080	4-way valve output status	07: Cooling/ Heating	0: Cooling, 1: Heating
01	085	Pressure switch (High pressure)	08: On/Off	0: Off (Close), 1: On (Open)
01	100	Operating current	09: A	
01	110	Outdoor unit total power-on hours	11: h	
01	111	Compressor total heating operation hours	11: h	
01	112	Compressor total cooling operation hours	11: h	
01	113	Compressor total operation hours	11: h	
01	114	Outdoor unit fan 1 total operation hours	11: h	
01	145	Outdoor low noise input (External input)	00: —	0: Off, 1: On
01	146	Outdoor peak cut (External input)	00: —	0: Off 1: Mode 4 (100%) 2: Mode 3 (75%) 3: Mode 2 (50%) 4: Mode 1 (Forced thermostat off)
01	147	Demand response (External input)	00: —	0: Normal, 1: DRM1, 2: DRM2, 3: DRM3

CONTROL AND FUNCTIONS

Available Sensor ID				
Sensor ID		Item	Unit	Remarks
01	148	Switching cooling and heating mode (External input)	00: —	0: Cooling, 1: Heating
01	149	Emergency stop (External input)	00: —	0: Off, 1: On
01	155	Compressor status (External output)	00: —	0: Off, 1: On
01	156	Error status (External output)	00: —	0: Off, 1: On

CONTROL AND FUNCTIONS

8. Various protections

8-1. Discharge gas temperature over-rise prevention control

The discharge gas temperature sensor (discharge thermistor: outdoor unit side) detects the discharge gas temperature.

- When the discharge temperature becomes higher than the trigger condition, the compressor frequency is decreased as the table below, and it continues to decrease until the discharge temperature becomes lower than the trigger condition.
- When the discharge temperature becomes lower than the release condition, control of compressor frequency is released.
- When the discharge temperature becomes higher than the compressor protection temperature, the compressor is stopped and the indoor unit indicator lamp starts blinking.

Trigger condition	104°C
Rotation number of compressor	-14 rps/120 seconds
Release condition	101°C
Compressor protection temperature	110°C

CONTROL AND FUNCTIONS

8-2. Anti-freezing control (cooling and dry mode)

The rotation number of compressor is decrease in cooling and dry mode when the indoor unit heat exchanger temperature sensor detects the temperature lower than the trigger condition.

When the indoor unit heat exchanger temperature reaches release condition, the anti-freezing control is stopped.

Trigger condition		4°C
Release condition	Outdoor temp. ≥ 10°C*1 Outdoor temp. ≥ 12°C*2	7°C
	Outdoor temp. < 10°C*1 Outdoor temp. < 12°C*2	13°C

*1: During the outdoor temperature dropping

*2: During the outdoor temperature rising

8-3. Current release control

The rotation number of compressor is controlled so that the outdoor unit input current does not exceeds current limit value set according to the outdoor temperature.

The rotation number of compressor returns according to the operation mode, when the current becomes lower than the release value.

■ Models: AOHH30KMTB and AOHH36KMTB

Operation mode	Outdoor temp. (Ta)	Trigger condition	Release condition
Cooling	52°C ≤ Ta	8.0 A	7.5 A
	50°C ≤ Ta < 52°C	12.0 A	11.5 A
	42°C ≤ Ta < 50°C	14.0 A	13.5 A
	2°C ≤ Ta < 42°C	18.0 A	17.5 A
	Ta < 2°C	20.0 A	19.5 A
Heating	2°C ≤ Ta	18.0 A	17.5 A
	Ta < 2°C	20.0 A	19.5 A

CONTROL AND FUNCTIONS

8-4. Compressor temperature protection

When the compressor temperature sensor detects higher than the trigger condition below, the compressor is stopped. When the compressor temperature sensor detects the release condition, the protection is released.

Trigger condition	108°C
Release condition	80°C (3 minutes after compressor stop)

8-5. High pressure protection

Trigger condition	Pressure switch: Off (Open: Higher than 4.2 MPa) Compressor stop
Release condition	Pressure switch: On (Close: Lower than 3.2 MPa) (3 minutes after compressor stop) Compressor restart

8-6. Low outdoor temperature protection

When the outdoor temperature sensor detects lower than the trigger condition below, the compressor is stopped.

Operation mode	Cooling/Dry
Trigger condition	-20°C
Release condition	-15°C

8-7. High temperature and high pressure release control

The compressor is controlled as follows.

- **Cooling mode**

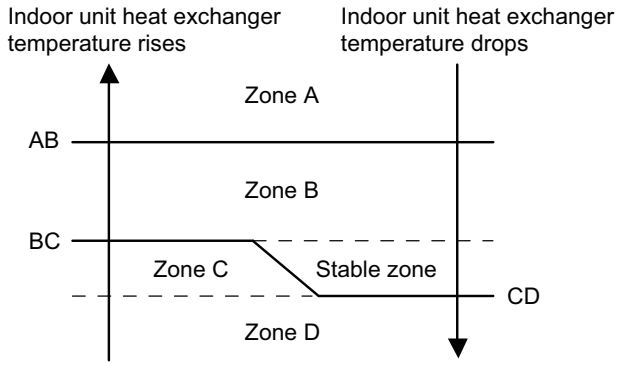

AB: 64 °C
BC: 60 °C
CD: 58 °C

Zone	Operation	
Zone A	Compressor is stopped.	
Zone B	The compressor frequency is decreased.	-7 rps/120 sec.
Zone C	The protection is released and the operation is returned to normal mode.	
Zone D		

- **Heating mode**

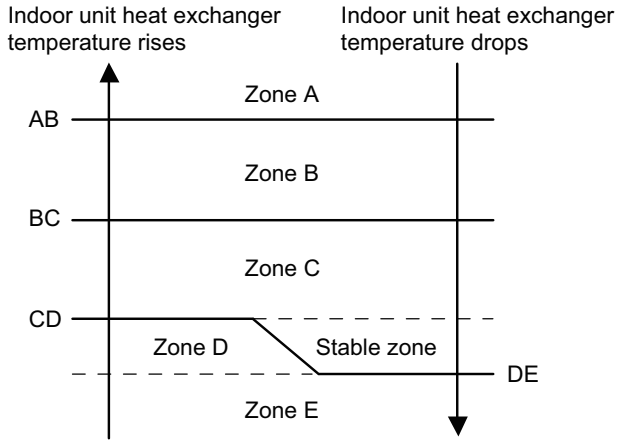

AB: 63°C
BC: 55°C
CD: 53°C
DE: 50°C

Zone	Operation	
Zone A	Compressor is stopped.	
Zone B	The compressor frequency is decreased.	-15 rps/120 sec.
Zone C		-2 rps/120 sec.
Zone D	The protection is released and the operation is returned to normal mode.	
Zone E		

CONTROL AND FUNCTIONS

CONTROL AND FUNCTIONS

5. FILED WORKING

CONTENTS

5. FILED WORKING

1. Function settings (for indoor unit).....05-1
1-1. Function settings by using remote controller 05-1
1-2. Custom code setting for wireless remote controller 05-7
2. Function settings (for outdoor unit) 05-8
2-1. Control PCB and switch buttons location.....05-8
2-2. Local setting procedure 05-10
3. External input and output (For indoor unit) 05-12
3-1. External input.....05-13
3-2. External output 05-16
3-3. Setting of external input and output 05-18
3-4. Details of control input function.....05-19
3-5. Details of control output function 05-23
4. External input and output (for outdoor unit).....05-25
4-1. External input.....05-25
4-2. External output 05-27

1. Function settings (for indoor unit)

To adjust the functions of this product according to the installation environment, various types of function settings are available.

NOTE: Incorrect settings can cause a product malfunction.

1-1. Function settings by using remote controller

Some function settings can be changed on the remote controller. After confirming the setting procedure and the content of each function setting, select appropriate functions for your installation environment.

■ Setting procedure by using wireless remote controller

The function number and the associated setting value are displayed on the LCD of the remote controller. Follow the instructions written in the local setup procedure supplied with the remote controller, and select appropriate setting according to the installation environment.

Before connecting the power supply of the indoor unit, reconfirm following items:

- Cover for the electrical enclosure on the outdoor unit is in place.
- There is no wiring mistake.
- Piping air tightness test and vacuuming have been performed firmly.
- All the necessary wiring work for outdoor unit has been finished.

After reconfirming the items listed above, connect the power supply of the indoor unit.

NOTES:

- Settings will not be changed if invalid numbers or setting values are selected.
- When optional wired remote controller is used, refer to the installation manual enclosed with the remote controller.

Entering function setting mode:

While pressing the POWERFUL button and TEMP. (∧) button simultaneously, press the RESET button to enter the function setting mode.

Selecting the function number and setting value:

1. Press the TEMP. (∧) (∨) buttons to select the function number. To switch between the left and right digits, press the 10 °C HEAT button.
2. Press the POWERFUL button to proceed to value setting. To return the function number selection, press the POWERFUL button again.
3. Press the TEMP. (∧) (∨) buttons to select the setting value. To switch between the left and right digits, press the 10 °C HEAT button.
4. Press the MODE button once. Confirm that you hear the beep sound.
5. Press the START/STOP button to fix the function setting. Confirm that you hear the beep sound.
6. Press the RESET button to end the function setting mode.
7. After completing the function setting, be sure to disconnect the power supply and then reconnect it.

⚠ CAUTION

After disconnecting the power supply, wait 30 seconds or more before reconnecting it. The function setting will not become active unless the power supply is disconnected and then reconnected.

NOTES:

- The air conditioner custom code is set to A prior to shipment.
- If you do not know the air conditioner custom code setting, try each of the custom codes (A →b →c →d) until you find the code that operates the air conditioner.

■ Contents of function setting

Each function setting listed in this section is adjustable in accordance with the installation environment.

NOTE: Setting will not be changed if invalid numbers or setting values are selected.

● Function setting list

	Function no.	Functions
1)	11	Filter sign
2)	30/31	Room temperature control for indoor unit sensor
3)	35/36	Room temperature control for wired remote controller sensor
4)	40	Auto restart
5)	42	Room temperature sensor switching
6)	44	Remote controller custom code
7)	46	External input control
8)	48	Room temperature sensor switching (Aux.)
9)	49	Indoor unit fan control for energy saving for cooling
10)	60	Switching functions for external output terminal
11)	96	Special cooling operation

FIELD WORKING

1) Filter sign

Select appropriate intervals for displaying the filter sign on the indoor unit according to the estimated amount of dust in the air of the room.

If the indication is not required, select "No indication" (03).

Function number	Setting value	Setting description	Factory setting
11	00	Standard (400 hours)	
	01	Long interval (1,000 hours)	
	02	Short interval (200 hours)	
	03	No indication	♦

FIELD WORKING

2) Room temperature control for indoor unit sensor

Depending on the installed environment, correction of the room temperature sensor may be required. Select the appropriate control setting according to the installed environment.

The temperature of the room temperature sensor is corrected as follows:

Corrected temp. = Temp. of the room temp. sensor - Correction temp. value

Example of correction:

When the temperature of the room temp. sensor is 26°C and the setting value is “03” (-1.0°C), corrected temp. will be 27°C (26°C - [-1.0°C]).

The temperature correction values show the difference from the Standard setting "00" (manufacturer’s recommended value).

Function number		Setting value	Setting description		Factory setting
30 (For cooling)	31 (For heating)	00	Standard setting		♦
		01	No correction 0.0 °C		
		02	-0.5 °C	More cooling Less heating	
		03	-1.0 °C		
		04	-1.5 °C		
		05	-2.0 °C		
		06	-2.5 °C		
		07	-3.0 °C		
		08	-3.5 °C		
		09	-4.0 °C		
		10	+0.5 °C	Less cooling More heating	
		11	+1.0 °C		
		12	+1.5 °C		
		13	+2.0 °C		
		14	+2.5 °C		
		15	+3.0 °C		
		16	+3.5 °C		
		17	+4.0 °C		

FIELD WORKING

3) Room temperature control for wired remote controller sensor

Depending on the installed environment, correction of the wire remote temperature sensor may be required. Select the appropriate control setting according to the installed environment.

To change this setting, set Function 42 to Both “01”.

Ensure that the Thermo Sensor icon is displayed on the remote controller screen.

Function number		Setting value	Setting description		Factory setting
35 (For cooling)	36 (For heating)	00	Standard setting		♦
		01	No correction 0.0°C		
		02	-0.5 °C	More cooling Less heating	
		03	-1.0 °C		
		04	-1.5 °C		
		05	-2.0 °C		
		06	-2.5 °C		
		07	-3.0 °C		
		08	-3.5 °C		
		09	-4.0 °C		
		10	+0.5 °C	Less cooling More heating	
		11	+1.0 °C		
		12	+1.5 °C		
		13	+2.0 °C		
		14	+2.5 °C		
		15	+3.0 °C		
		16	+3.5 °C		
		17	+4.0 °C		

4) Auto restart

Enables or disables automatic restart after a power interruption.

Function number	Setting value	Setting description	Factory setting
40	00	Enable	♦
	01	Disable	

NOTE: Auto restart is an emergency function such as for power outage etc. Do not attempt to use this function in normal operation. Be sure to operate the unit by remote controller or external device.

5) Room temperature sensor switching

(Only for wired remote controller)

When using the wired remote controller temperature sensor, change the setting to "Both" (01).

Function number	Setting value	Setting description	Factory setting
42	00	Indoor unit	♦
	01	Both	

00: Sensor on the indoor unit is active.

01: Sensors on both indoor unit and wired remote controller are active.

NOTE: Remote controller sensor must be turned on by using the remote controller.

FIELD WORKING

6) Remote controller custom code

(Only for wireless remote controller)

The indoor unit custom code can be changed. Select the appropriate custom code.

Function number	Setting value	Setting description	Factory setting
44	00	A	♦
	01	B	
	02	C	
	03	D	

7) External input control

"Operation/Stop" mode or "Forced stop" mode can be selected.

Function number	Setting value	Setting description	Factory setting
46	00	Operation/Stop mode 1 (Remote controller enabled)	♦
	01	(Setting prohibited)	
	02	Forced stop mode	
	03	Operation/Stop mode 2 (Remote controller disabled)	

8) Room temperature sensor switching (Aux.)

To use the temperature sensor on the wired remote controller only, change the setting to "Wired remote controller" (01).

This function will only work if the function setting 42 is set at "Both" (01).

When the setting value is set to "Both" (00), more suitable control of the room temperature is possible by setting function setting 30 and 31 too.

Function number	Setting value	Setting description	Factory setting
48	00	Both	♦
	01	Wired remote controller	

9) Indoor unit fan control for energy saving for cooling

Enables or disables the power-saving function by controlling the indoor unit fan rotation when the outdoor unit is stopped during cooling operation.

Function number	Setting value	Setting description	Factory setting
49	00	Disable	
	01	Enable	
	02	Remote controller	♦

00: When the outdoor unit is stopped, the indoor unit fan operates continuously following the setting on the remote controller.

01: When the outdoor unit is stopped, the indoor unit fan operates intermittently at a very low speed.

02: Enable or disable this function by remote controller setting.

NOTE: Set to "00" or "01" when connecting a remote controller that cannot set the Fan control for energy saving function or connecting a network converter. To confirm if the remote controller has this setting, refer to the operating manual of each remote controller.

10) Switching functions for external output terminal

Functions of the external output terminal can be switched. For details, refer to “External input and output”.

Function number	Setting value	Setting description	Factory setting
60	00	Operation status	♦
	01—08	(Setting prohibited)	
	09	Error status	
	10	Indoor unit fan operation status	
	11	(Setting prohibited)	
	12	Setpoint attainment status	

11) Special cooling operation

Stabilizes the cooling operation when the outdoor temperature is low.

- Operation mode: Fixed at COOL
- Airflow: Fixed at HIGH
- Set temperature: 24°C to 30°C

Function number	Setting value	Setting description	Factory setting
96	00	Disable	♦
	01	Enable	

NOTES:

- Connect the optional wired remote controller to change the setting value to “Enable” (01).
- Do not use the wireless remote controller after changing the setting value to “Enable” (01).
- If the wired remote controller becomes noncommunicable after setting “Enable” (01), the cooling operation starts automatically.
- If dew condenses on the indoor unit surface after setting “Enable” (01), set the setting value back to “Disable” (00).

FIELD WORKING

1-2. Custom code setting for wireless remote controller

To interconnect the air conditioner and the wireless remote controller, assignment of the custom code for the wireless remote controller is required.

NOTE: Air conditioner cannot receive a signal if the air conditioner has not been set for the custom code.

When 2 or more air conditioners are installed in a room, and the remote controller is operating an air conditioner other than the one you wish to set, change the custom code of the remote controller to operate only the air conditioner you wish to set. (4 selections possible.)
Confirm the setting of the remote controller custom code and the function setting. If these do not match, the remote controller cannot be used to operate for the air conditioner.

1. Press the START/STOP button until only the clock is displayed on the remote controller display.
2. Press the MODE button for at least 5 seconds to display the current custom code. (Initially set to A.)
3. Press the TEMP. (∧) (∨) buttons to change the custom code between A →b →c →d. Match the code on the display to the air conditioner custom code. (Initially set to A.)
4. Press the MODE button again to return to the clock display. The custom code will be changed.

NOTES:

- If no button is pressed within 30 seconds after the custom code is displayed, the system returns to the original clock indicator. In this case, start again from step 1.
- The air conditioner custom code is set to A prior to shipment. To change the custom code, contact your retailer.
- If you do not know the assigned code for the air conditioner, try each of the custom code (A →b →c →d) until you find the code which operates the air conditioner.

FIELD WORKING

2. Function settings (for outdoor unit)

Perform appropriate function setting locally according to the installation environment.

NOTE: Incorrect settings can cause a product malfunction.

⚠ CAUTION

- Before setting up the switch buttons, discharge the static electricity from your body.
- Never touch the terminals or the patterns on the parts that are mounted on the PCB.

2-1. Control PCB and switch buttons location

Control PCB of the outdoor unit is located as shown in the following figure.

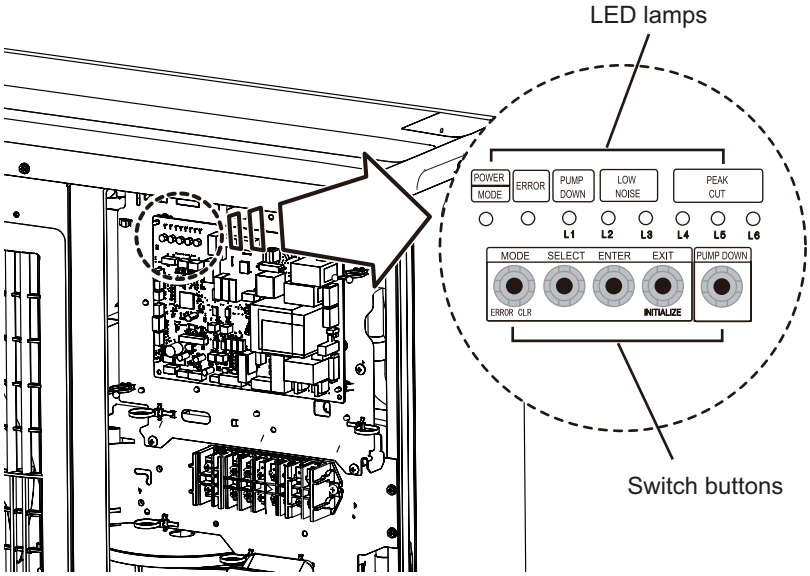

■ Switch buttons and the functions

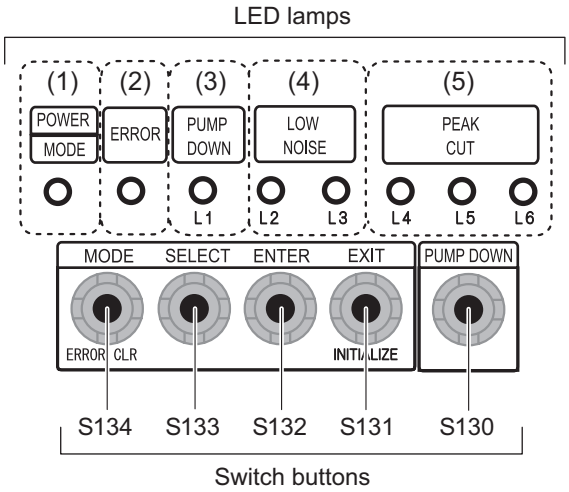

LED lamp			Function or operation method
(1)	POWER/MODE	Green	Lights on while power on. Blinks to show the local setting on the outdoor unit or the error code.
(2)	ERROR	Red	Blinks during error operation.
(3)	PUMP DOWN (L1)	Orange	Lights on during pump down operation.
(4)	LOW NOISE MODE (L2 and L3)	Orange	Lights on during “Low noise mode” when local setting is activated. (Light pattern of L2 and L3 indicates the low noise level.)
(5)	PEAK CUT MODE (L4, L5, and L6)	Orange	Lights on during “Peak cut mode” when local setting is activated. (Light pattern of L4, L5, and L6 indicates the peak cut level.)

Switch button		Function or operation method
S134	MODE	Switches between “Local setting” and “Error code display”.
S133	SELECT	Switches between the individual “Local settings” and the “Error code displays”.
S132	ENTER	Switches between the individual “Local settings” and the “Error code displays”.
S131	EXIT	Returns to “Operation status display”.
S130	PUMP DOWN	Starts the pump down operation.

FIELD WORKING

2-2. Local setting procedure

NOTE: Before performing the function setting, be sure to stop the operation of the air conditioner.

■ Low noise mode

1. Press the MODE switch button (S134) for 3 seconds or more to switch to “Local setting mode”.
2. After confirming the LED lamp of POWER/MODE blinks 9 times, press the ENTER switch button (S132).

POWER / MODE	ERROR	PUMP DOWN (L1)	LOW NOISE (L2)	LOW NOISE (L3)	PEAK CUT (L4)	PEAK CUT (L5)	PEAK CUT (L6)
Blinks (9 times)	○	○	○	○	○	○	○

Sign “ ○ ”: Lights off

3. Press the SELECT switch button (S133), and adjust the LED lamp as shown below. Then the LED lamp indicates the current setting.

	LOW NOISE (L2)	LOW NOISE (L3)
LOW NOISE MODE	○	Blink

4. Press the ENTER switch button (S132).

	LOW NOISE (L2)	LOW NOISE (L3)
LOW NOISE MOD E	○	●

Sign “ ● ”: Lights on

5. Press the SELECT switch button (S133), and adjust the LED lamps as shown below.

	PEAK CUT (L4)	PEAK CUT (L5)	PEAK CUT (L6)
MODE 1: Low	○	○	Blink
MODE 2: Lower	○	Blink	○

6. Press the ENTER switch button (S132) and fix it.

	PEAK CUT (L4)	PEAK CUT (L5)	PEAK CUT (L6)
MODE 1: Low	○	○	●
MODE 2: Lower	○	●	○

7. To return to “Operating status display (Normal operation)”, press the EXIT switch button (S131).

In case of missing how many times you pressed the SELECT and ENTER switch buttons:

1. To return to “Operation status display (Normal operation)”, press the EXIT switch button once.
2. Restart from the beginning of setting procedure.

FIELD WORKING

FIELD WORKING

■ Peak cut mode

1. Press the MODE switch button (S134) for 3 seconds or more to switch to “Local setting mode”.
2. After confirming the LED lamp of POWER/MODE blinks 9 times, press the ENTER switch button (S132).

POWER / MODE	ERROR	PUMP DOWN (L1)	LOW NOISE (L2)	LOW NOISE (L3)	PEAK CUT (L4)	PEAK CUT (L5)	PEAK CUT (L6)
Blinks (9 times)	○	○	○	○	○	○	○

Sign “ ○ ”: Lights off

3. Press the SELECT switch button (S133), and adjust the LED lamp as shown below. Then the LED lamp indicates the current setting.

	LOW NOISE (L2)	LOW NOISE (L3)
PEAK CUT MOD E	Blink	○

4. Press the ENTER switch button (S132).

	LOW NOISE (L2)	LOW NOISE (L3)
PEAK CUT MODE	●	○

Sign “ ● ”: Lights on

5. Press the SELECT switch button (S133), and adjust the LED lamps as shown below.

	PEAK CUT (L4)	PEAK CUT (L5)	PEAK CUT (L6)
0 % of rated input ratio	○	○	Blink
50 % of rated input ratio	○	Blink	○
75 % of rated input ratio	○	Blink	Blink
100 % of rated input ratio	Blink	○	○

6. Press the ENTER switch button (S132) and fix it.

	PEAK CUT (L4)	PEAK CUT (L5)	PEAK CUT (L6)
0 % of rated input ratio	○	○	●
50 % of rated input ratio	○	●	○
75 % of rated input ratio	○	●	●
100 % of rated input ratio	●	○	○

7. To return to “Operating status display (Normal operation)”, press the EXIT switch button (S131).

NOTE: When pressed number is lost during setting, you must redo the setting procedure. Return to “Operation status display (Normal operation)” by pressing the EXIT switch button once, and restart from the beginning of the setting procedure.

FIELD WORKING

3. External input and output (For indoor unit)

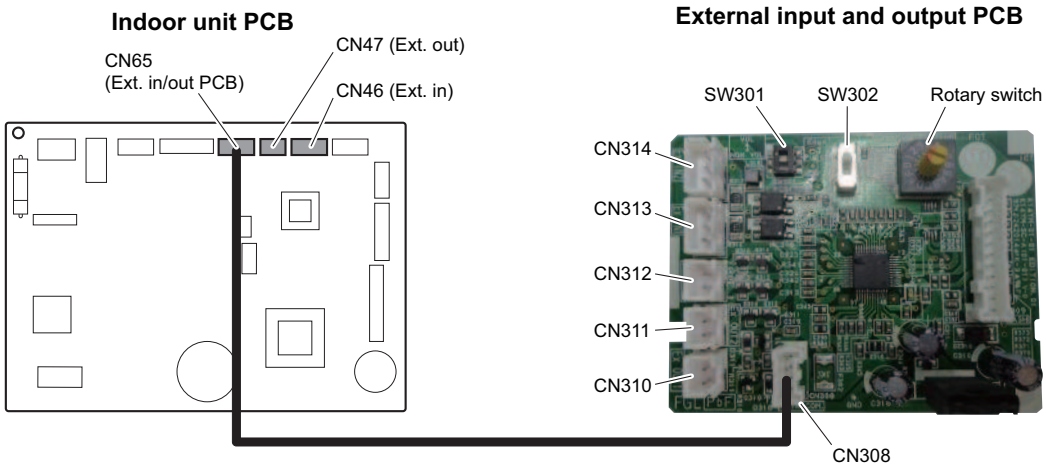

Connecting point		Input/Output	Function	Input select	Input signal
Indoor unit	CN46	Input	Operation/Stop	Dry contact	Edge
			Forced stop		
	CN47	Output	Operation/Stop	—	—
			Error status		
			Indoor unit fan operation status		
External Input and Output PCB (UTY-XCSXZ2)	CN313 CN314	Input	Operation/Stop	Dry contact/Apply voltage	Edge/Pulse
			Forced stop		
	CN313		Forced thermostat off		Edge
	CN310 CN311 CN312	Output	Operation/Stop	—	—
			Error status		
			Indoor unit fan operation status		

NOTE: For details of the switching function, refer to "Setting of external input and output" on page 05-18.

FIELD WORKING

3-1. External input

With using external input function, some functions on this product can be controlled from an external device.

- “Operation/Stop” mode or "Forced stop" mode can be selected with function setting of indoor unit.
- A twisted pair cable should be used. Maximum length of cable is 150 m.
- Use an external input and output cable with appropriate external dimension, depending on the number of cables to be installed.
- The wire connection should be separate from the power cable line.

■ Indoor unit

Indoor unit functions such as Operation/Stop can be done by using indoor unit connectors.

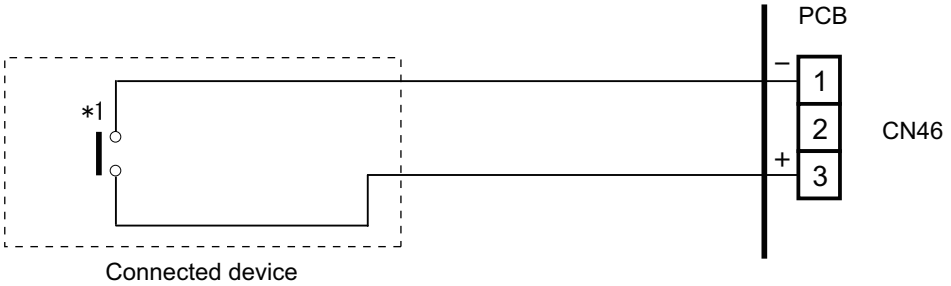

*1: The switch can be used on the following condition: DC 12 V to 24 V, 1 mA to 15 mA.

FIELD WORKING

■ External Input and Output PCB

The indoor unit Operation/Stop can be set by using the input connector on the PCB.

- **Input select**
  Use either one of these types of connectors according to the application. (Both types of connectors cannot be used simultaneously.)
  - **Dry contact**
    In case of internal power supply, set the slide switch of SW301 to "NON VOL" side.

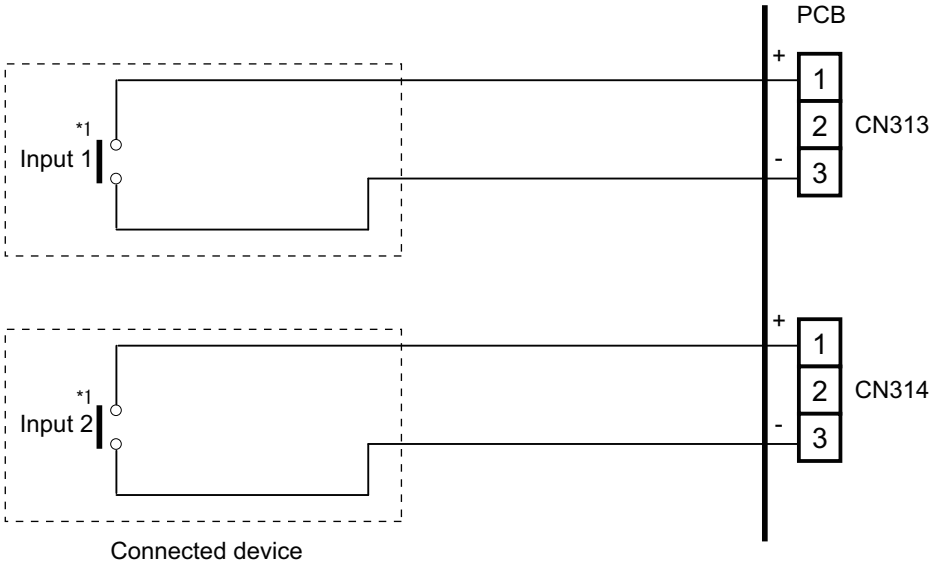

*1: The switches can be used on the following condition: DC 12 V to 24 V, 1 mA to 15 mA.

  - **Apply voltage**
    In case of external power supply, set the slide switch of SW301 to "VOL" side.

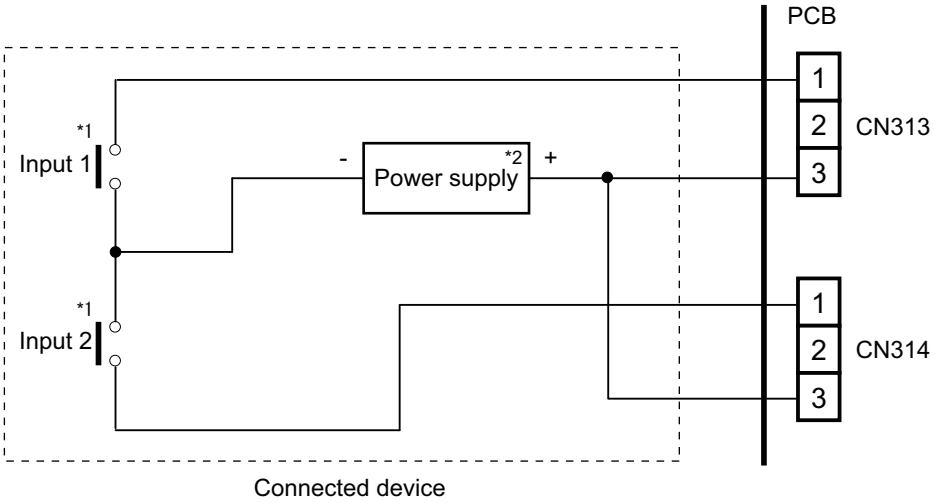

*1: The switches can be used on the following condition: DC 12 V to 24 V, 1 mA to 15 mA.
*2: Make the power supply DC 12 V to 24 V, 10 mA or more.

FIELD WORKING

FIELD WORKING

■ Input signal type

- **Indoor unit**
  Input signal type is only "Edge".

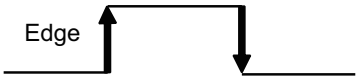

- **External Input and Output PCB**
  The input signal type can be selected.
  Signal type (edge or pulse) can be switched by the DIP switch 2 (SW302) on the External Input and Output PCB.

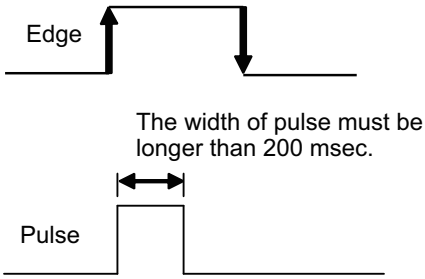

NOTE: The input signal supports the following switch type:
- Edge: Alternate type switch
- Pulse: Momentary type switch

FIELD WORKING

3-2. External output

Use an external output cable with appropriate external dimension, depending on the number of cables to be installed.

■ Indoor unit

- A twisted pair cable should be used. Maximum length of cable is 25 m.
- Output voltage: High DC 12 V ±2 V, Low 0 V.
- Permissible current: 50 mA
- For details, refer to "Setting of external input and output" on page 05-18.

- **When indicator, etc. are connected directly**

Example: Function setting number 60 is set to "00"

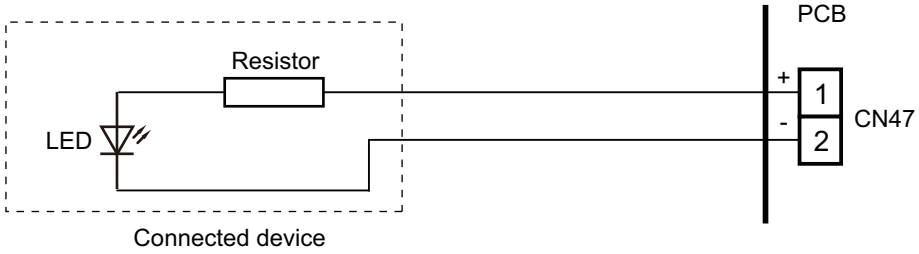

- **When connecting with a device equipped with a power supply**

Example: Function setting number 60 is set to "00"

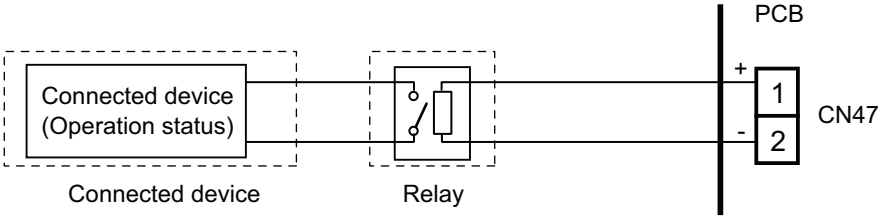

FIELD WORKING

■ External Input and Output PCB

- A twisted pair cable should be used. Maximum length of cable is 25 m.
- Output voltage: High DC 12 V ±2 V, Low 0 V.
- Permissible current: 50 mA
- For details, refer to "Setting of external input and output" on page 05-18.

- **When indicator or other components are connected directly:**
  Example: Rotary SW on External Input and Output PCB is set to “1”.

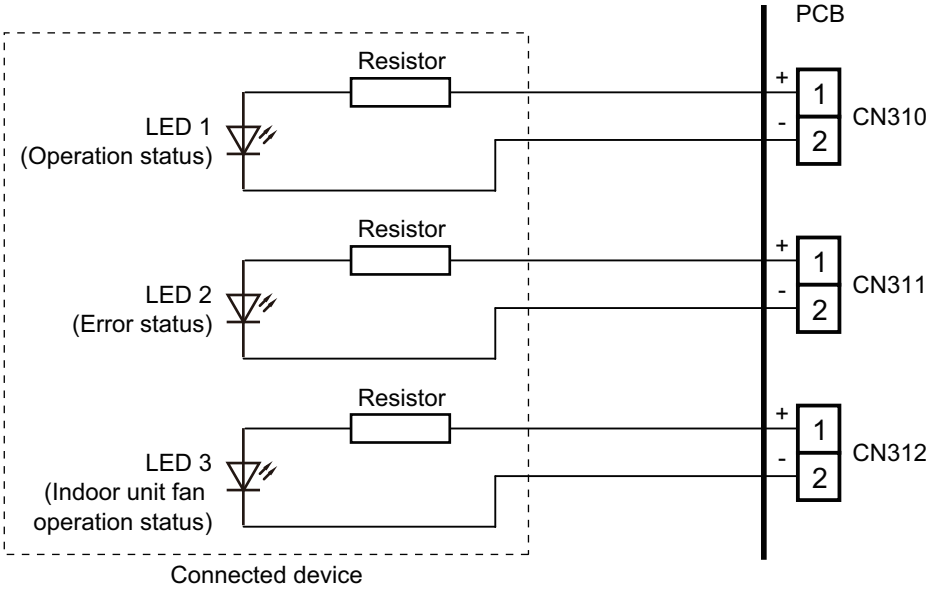

- **When connecting with a device equipped with a power supply:**
  Example: Rotary SW on External Input and Output PCB is set to “1”.

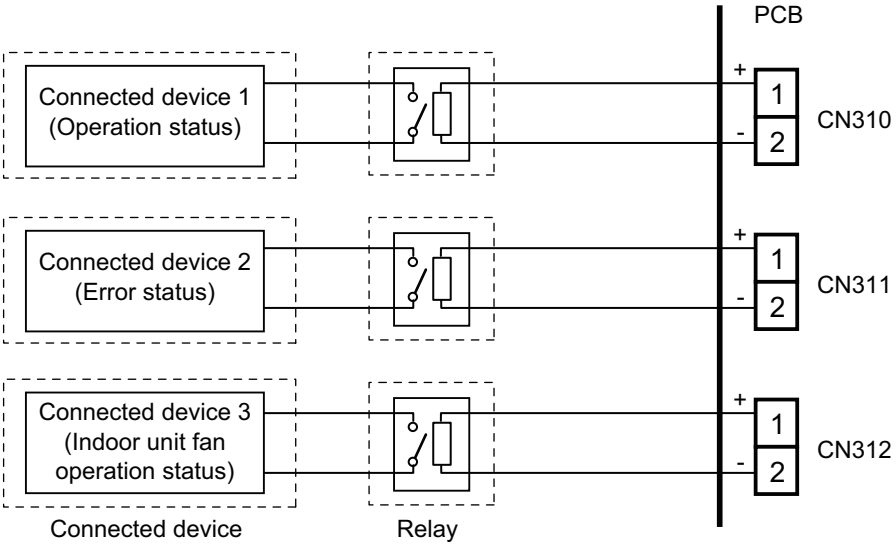

3-3. Setting of external input and output

- **Indoor unit**

Input		
Connection point	**Function setting number 46**	**Function**
CN46	00	Operation/Stop mode 1 (R.C. enabled)
	01	(Setting prohibited)
	02	Forced stop mode
	03	Operation/Stop mode 2 (R.C. disabled)

Output		
Connection point	**Function setting number 60**	**Function**
CN47	00	Operation/Stop
	01 to 08	(Setting prohibited)
	09	Error status
	10	Indoor unit fan operation status
	11	(Setting prohibited)
	12	Setpoint attainment status

- **External Input and Output PCB**

Switch setting		Input		Output		
Rotary switch	**SW302**	**CN313**	**CN314**	**CN310**	**CN311**	**CN312**
1	Edge	Operation/Stop	Not available	Operation/Stop	Error status	Indoor unit fan operation status
	Pulse	Operation	Stop			
2	Edge*	Forced thermostat off	Not available	Error status	Indoor unit fan operation status	Not available
3 to 9, A		(Setting prohibited)				
B		Forced thermostat off	Not available	Operation/Stop	Indoor unit fan operation status	Not available
C		Forced thermostat off	Not available	Operation/Stop	Error status	Not available
D		Forced thermostat off	Not available	Operation/Stop	Indoor unit fan operation status	Error status

NOTES:

- When the rotary switch is selected to “1”, the operation of the connector input of the indoor unit and the External Input and Output PCB input are the same. The operation content depends on the setting of function setting number 46.
- *: The external input other than “Operation/Stop” is available only when the SW302 is set to “Edge”.

FIELD WORKING

3-4. Details of control input function

■ Operation/Stop mode 1

- **In the case of "Edge" input**

Function setting	External Input and Output PCB		External input		Input signal	Command
	Rotary switch	SW302				
46-00	—		Input of indoor unit	CN46	Off → On	Operation
					On → Off	Stop
	1	Edge	External Input and Output PCB	CN313	Off → On	Operation
					On → Off	Stop

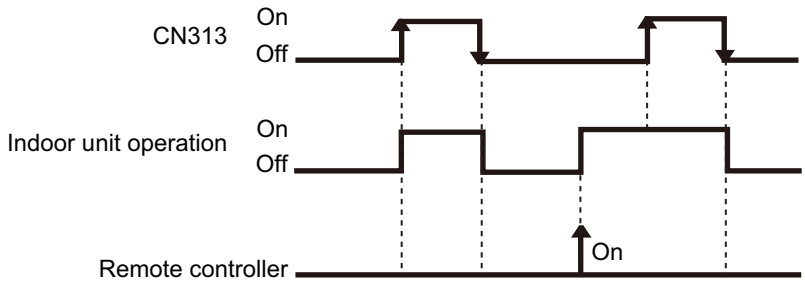

- **In the case of "Pulse" input**

Function setting	External Input and Output PCB		External input		Input signal	Command
	Rotary switch	SW302				
46-00	1	Pulse	External Input and Output PCB	CN313	Pulse	Operation
				CN314		Stop

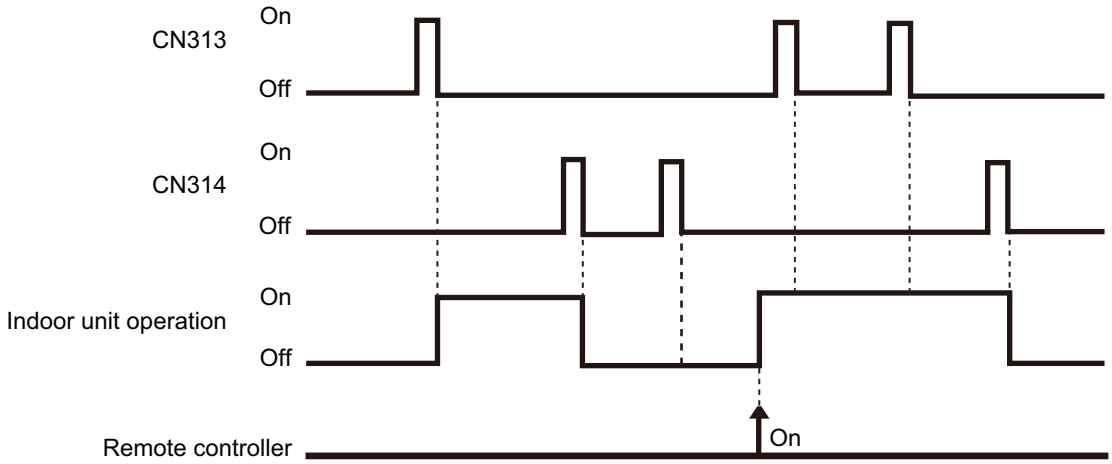

NOTES:

- The last command has priority.
- The indoor units within the same remote controller group operates in the same mode.

FIELD WORKING

■ Forced stop

- **In the case of "Edge" input**

Function setting	External Input and Output PCB		External input		Input signal	Command
	Rotary switch	SW302				
46-02	—		Input of indoor unit	CN46	Off → On	Forced stop (R.C. disabled)
					On → Off	Normal (R.C. enabled)
	1	Edge	External Input and Output PCB	CN313	Off → On	Forced stop (R.C. disabled)
					On → Off	Normal (R.C. enabled)

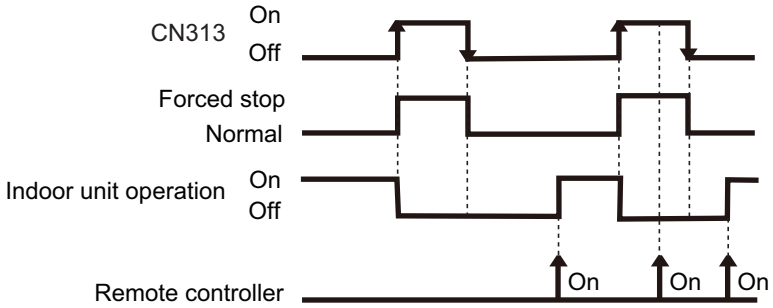

- **In the case of "Pulse" input**

Function setting	External Input and Output PCB		External input		Input signal	Command
	Rotary switch	SW302				
46-02	1	Pulse	External Input and Output PCB	CN313	Pulse	Forced stop (R.C. disabled)
				CN314		Normal (R.C. enabled)

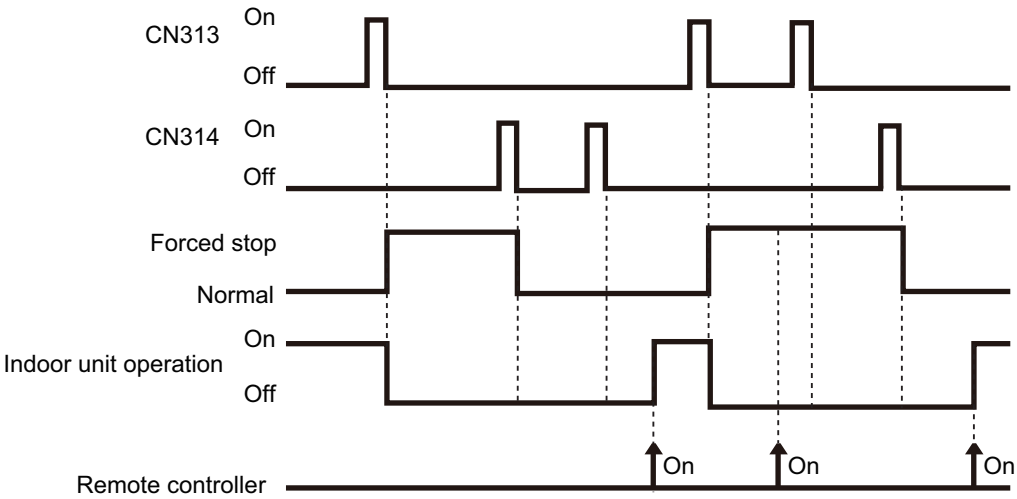

NOTES:

- When the forced stop is triggered, indoor unit stops and Operation/Stop operation by the remote controller is restricted.
- When forced stop function is used with forming a remote controller group, connect the same equipment to each indoor unit within the group.

FIELD WORKING

FIELD WORKING

■ Operation/Stop mode 2

- **In the case of "Edge" input**

Function setting	External Input and Output PCB		External input		Input signal	Command
	Rotary switch	SW302				
46-03	—		Input of indoor unit	CN46	Off → On	Operation (R.C. enabled)
					On → Off	Stop (R.C. disabled)
	1	Edge	External Input and Output PCB	CN313	Off → On	Operation (R.C. enabled)
					On → Off	Stop (R.C. disabled)

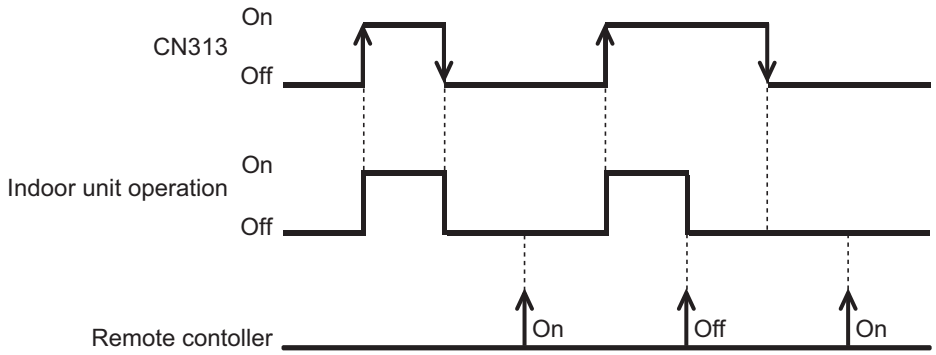

- **In the case of "Pulse" input**

Function setting	External Input and Output PCB		External input		Input signal	Command
	Rotary switch	SW302				
46-03	1	Pulse	External Input and Output PCB	CN313	Pulse	Operation (R.C. enabled)
				CN314		Stop (R.C. disabled)

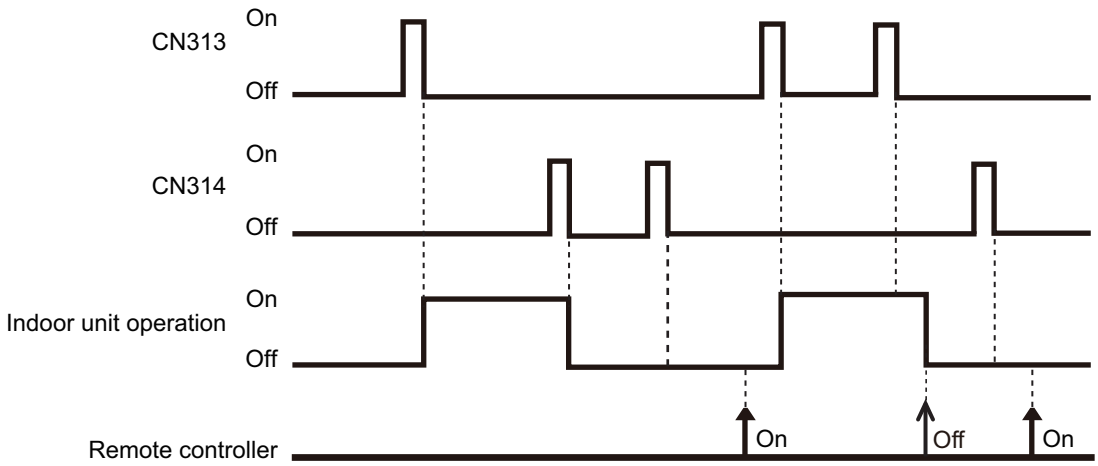

NOTE: When "Operation/Stop" mode 2 function is used with forming a remote controller group, connect the same equipment to each indoor unit within the group.

FIELD WORKING

FIELD WORKING

■ Forced thermostat off

External Input and Output PCB	External input		Input signal	Command
Rotary switch				
2, B, C, D	External Input and Output PCB	CN313	Off → On	Thermostat off
			On → Off	Normal operation

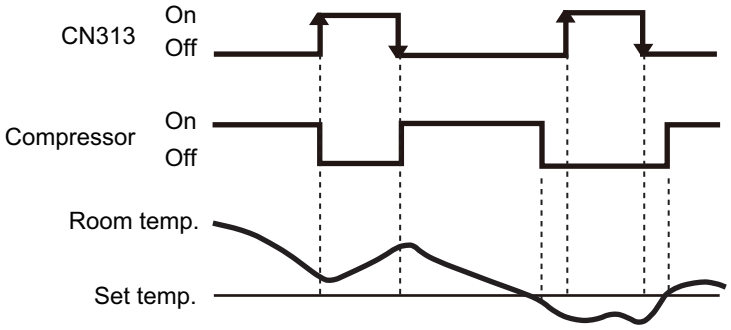

FIELD WORKING

3-5. Details of control output function

■ Operation status

Function setting	External Input and Output PCB Rotary switch	External output		Output signal	Status
60-00	1, 2	Output of indoor unit	CN47	Off → On	Operation
				On → Off	Stop
—	1, B, C, D	External Input and Output PCB	CN310	Off → On	Operation
				On → Off	Stop

The output is low when the unit is stopped.

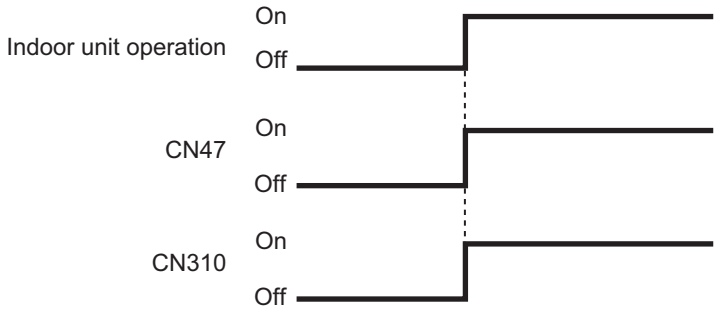

■ Error status

Function setting	External Input and Output PCB Rotary switch	External output		Output signal	Status
60-09	—	Output of indoor unit	CN47	Off → On	Error
				On → Off	Normal
—	2	External Input and Output PCB	CN310	Off → On	Error
				On → Off	Normal
—	1, C	External Input and Output PCB	CN311	Off → On	Error
				On → Off	Normal
—	D	External Input and Output PCB	CN312	Off → On	Error
				On → Off	Normal

The output is on when an error is generated for the indoor unit.

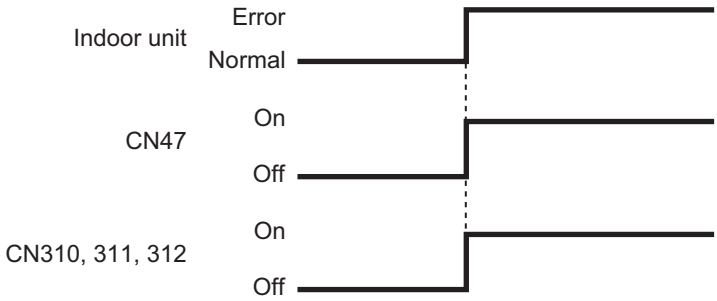

FIELD WORKING

FIELD WORKING

■ Indoor unit fan operation status

Function setting	External Input and Output PCB	External output		Output signal	Status
	Rotary switch				
60-10	C	Output of indoor unit	CN47	Off → On	Fan run
				On → Off	Fan stop
—	2, B, D	External Input and Output PCB	CN311	Off → On	Fan run
				On → Off	Fan stop
—	1	External Input and Output PCB	CN312	Off → On	Fan run
				On → Off	Fan stop

Output signal	Condition
On	The indoor unit fan is operating.
Off	The fan is stopped or during cold air prevention. During thermostat off when in dry mode operation.

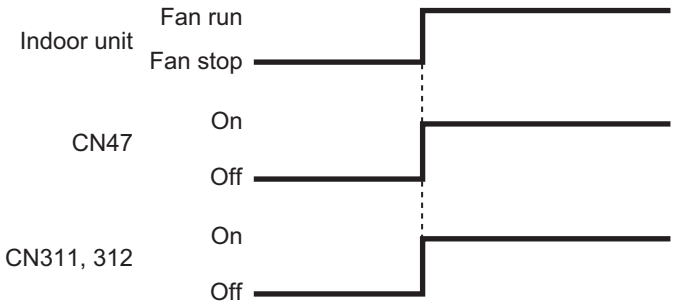

■ Setpoint attainment status

NOTE: This function is valid only when function setting 96 is “Enable” (01).
When the room temperature does not reach the setpoint at a room due to the lower cooling performance caused by external factor such as the outdoor temperature change, signal is output to tell the attainment status of setpoint.

Function setting	External Input and Output PCB	External output		Output signal	Command
	Rotary switch				
60-12	D	Output of indoor unit	CN47	On → Off	Normal
				Off → On	Setpoint attainment

Output signal	Condition
Off	Reached the setpoint. (Tr ≤ Tsα +0.5°C)
On	Unreached the setpoint. (Tr > Tsα +2.5°C) However, even if the setpoint unreached, the signal will not be output for 7 minutes after power is turned on.

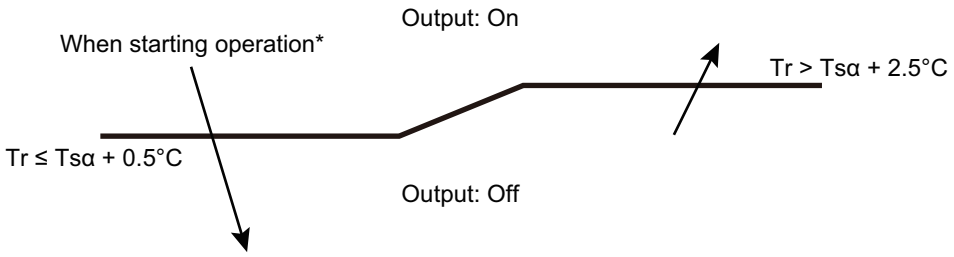

*: When starting operation or resetting, judges the zone to descending direction.

FIELD WORKING

4. External input and output (for outdoor unit)

With using external input and output functions, this product can be operated inter-connectedly with an external device.

Connector	Input	Output	Remarks
P580	Low noise mode	—	See external input/output settings for details.
PA580	Peak cut mode	—	
P590	—	Error status	
PA590	—	Compressor status	

4-1. External input

With using external input function, on/off status of “Low noise mode” and “Peak cut mode” can be specified by the external signal.

■ Low noise mode

In following condition, the operating noise of the outdoor unit reduces comparing from the one in normal operating condition:

The air conditioner is set to the “Low noise mode” when closing the contact input of a commercial timer or on/off switch to a connector on the control PCB of the outdoor unit.

NOTE: Product performance may drop depending on some conditions such as the outdoor temperature.

- **Circuit diagram example**

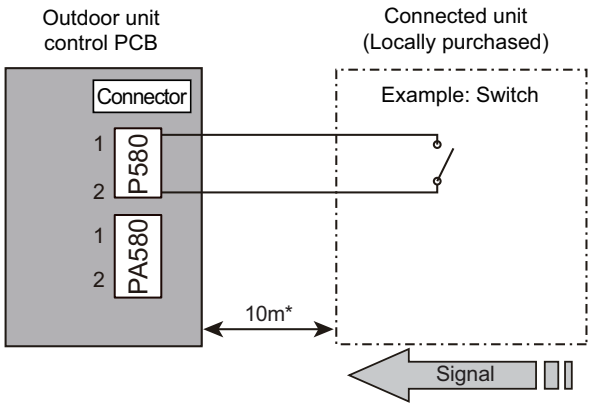

- Contact capacity: DC 24 V or more, 10 mA or more.
- *: Make the distance from the PCB to the connected unit within 10 m.
- Construct a circuit as shown in this figure with using optional parts mentioned below.
- Input signal: On in “Low noise mode”
- Input signal: Off in normal operation
- To set the level of “Low noise mode,” refer to "Low noise mode" on page 05-10 (under “Local setting procedure”.)

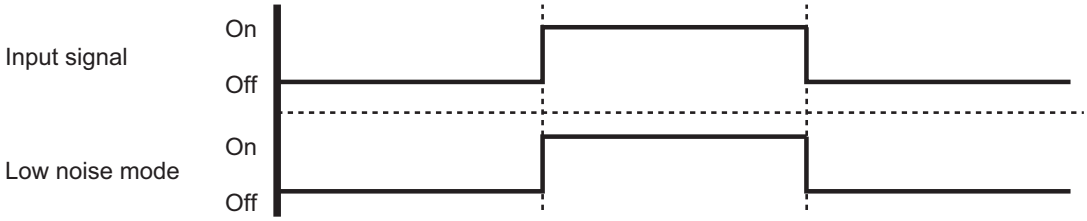

- **Optional part**

Part name	Model name	Exterior
External Connect Kit	UTY-XWZXZ3	External input wire 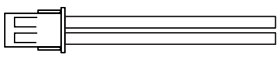

FIELD WORKING

■ Peak cut mode

By performing following on-site work, operation that suppresses the current value can be enabled:
The air conditioner is set to the “Peak cut mode” when closing the contact input of a commercial timer or on/off switch to a connector on the control PCB of the outdoor unit.

- **Circuit diagram example**

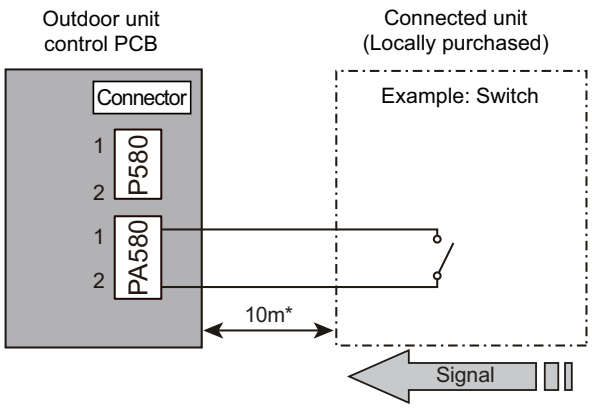

- Contact capacity: DC 24 V or more, 10 mA or more.
- *: Make the distance from the PCB to the connected unit within 10 m.
- Construct a circuit as shown in this figure with using optional parts mentioned below.
- Input signal: On in “Peak cut mode”
- Input signal: Off in normal operation
- To set the level of “Peak cut mode,” refer to "Peak cut mode" on page 05-11 (under “Local setting procedure”.)

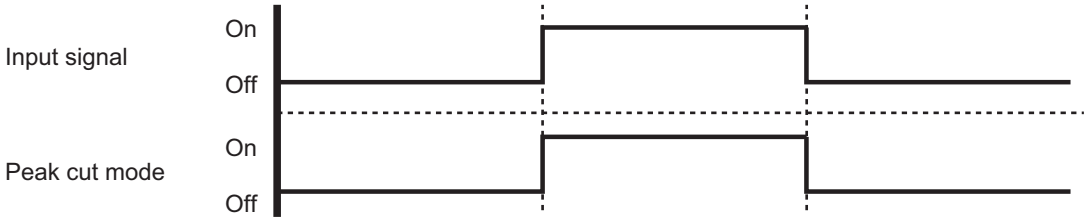

- **Optional part**

Part name	Model name	Exterior
External Connect Kit	UTY-XWZXZ3	External input wire 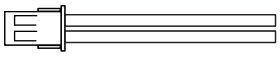

FIELD WORKING

4-2. External output

With using external output function, some status signals are transmitted to the control PCB, and the related LED lamp indicates the status of this product.

■ Error status output

Signal on air conditioner error status is generated when a malfunction occurs.

- **Circuit diagram example**

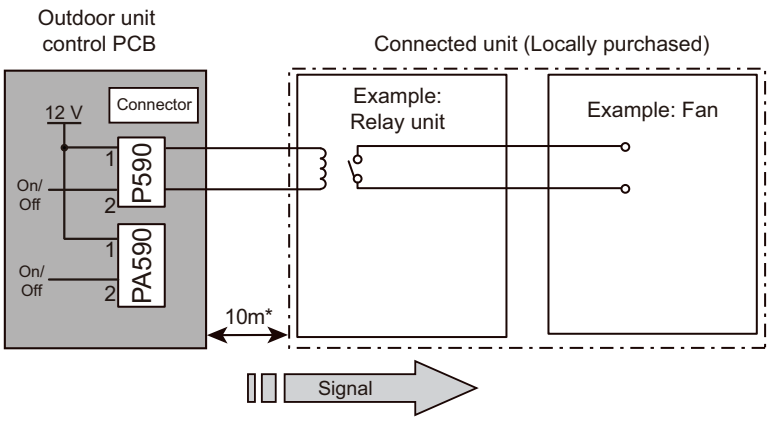

- Output voltage (Vcc): DC 12 V 50 mA or less
- *: Make the distance from the PCB to the connected unit within 10 m.

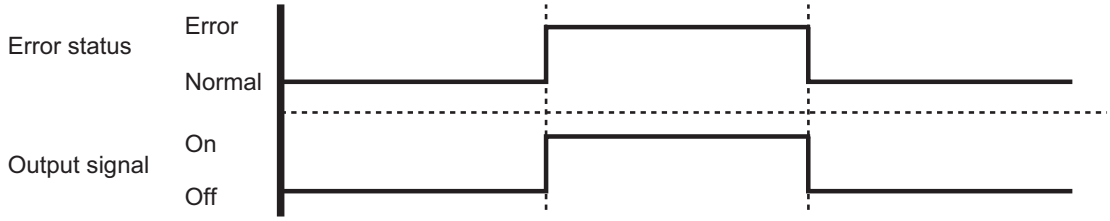

- **Optional part**

Part name	Model name	Exterior
External Connect Kit	UTY-XWZXZ3	External output wire 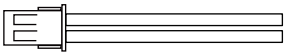

■ Compressor status output

Signal on compressor operation status is generated when the compressor is running.

- **Circuit diagram example**

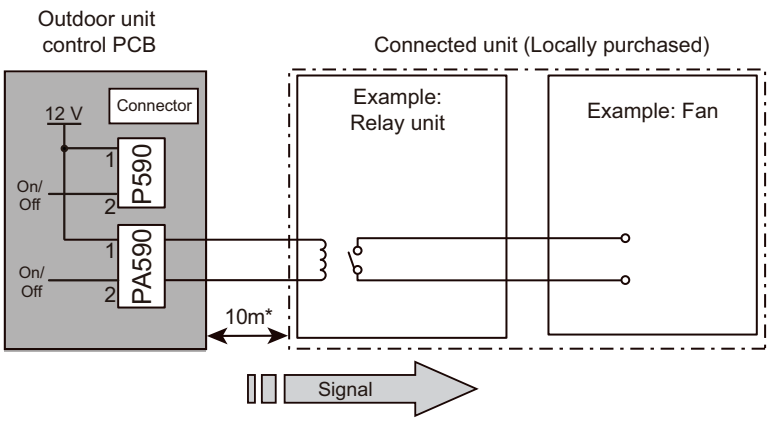

- Output voltage (Vcc): DC 12 V 50 mA or less
- *: Make the distance from the PCB to the connected unit within 10 m.

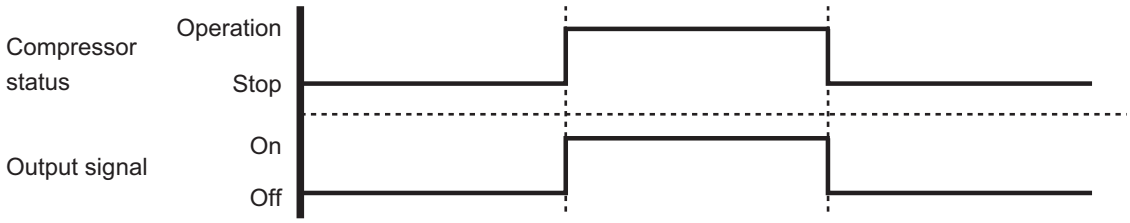

- **Optional part**

Part name	Model name	Exterior
External Connect Kit	UTY-XWZXZ3	External output wire 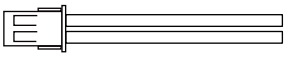

FIELD WORKING

FIELD WORKING